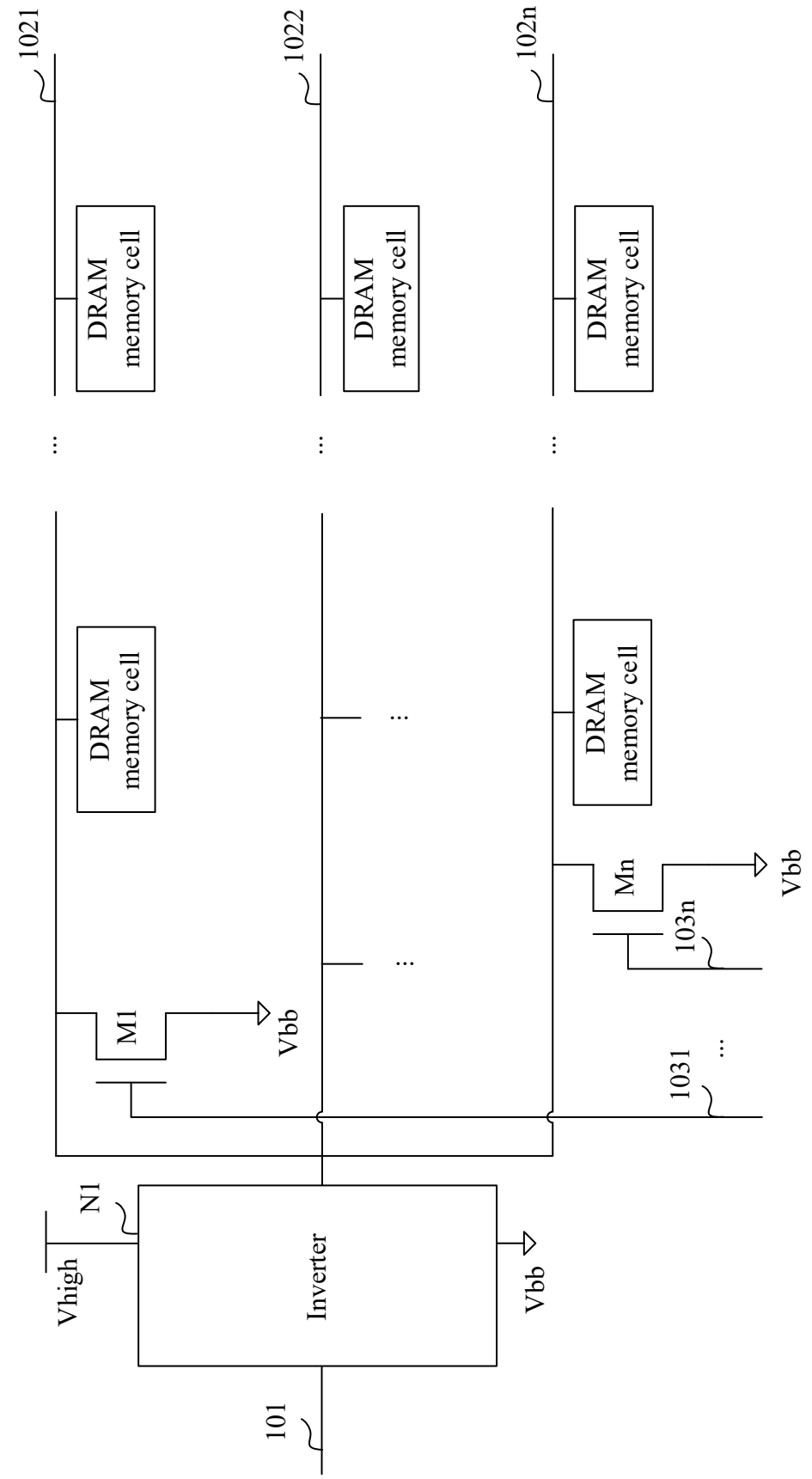
1021
1022
102n
DRAM memory cell
DRAM memory cell
DRAM memory cell
DRAM memory cell
M1
Vbb
Mn
103n
Vbb
1031
N1
Vhigh
Inverter
Vbb
101

FIG. 1

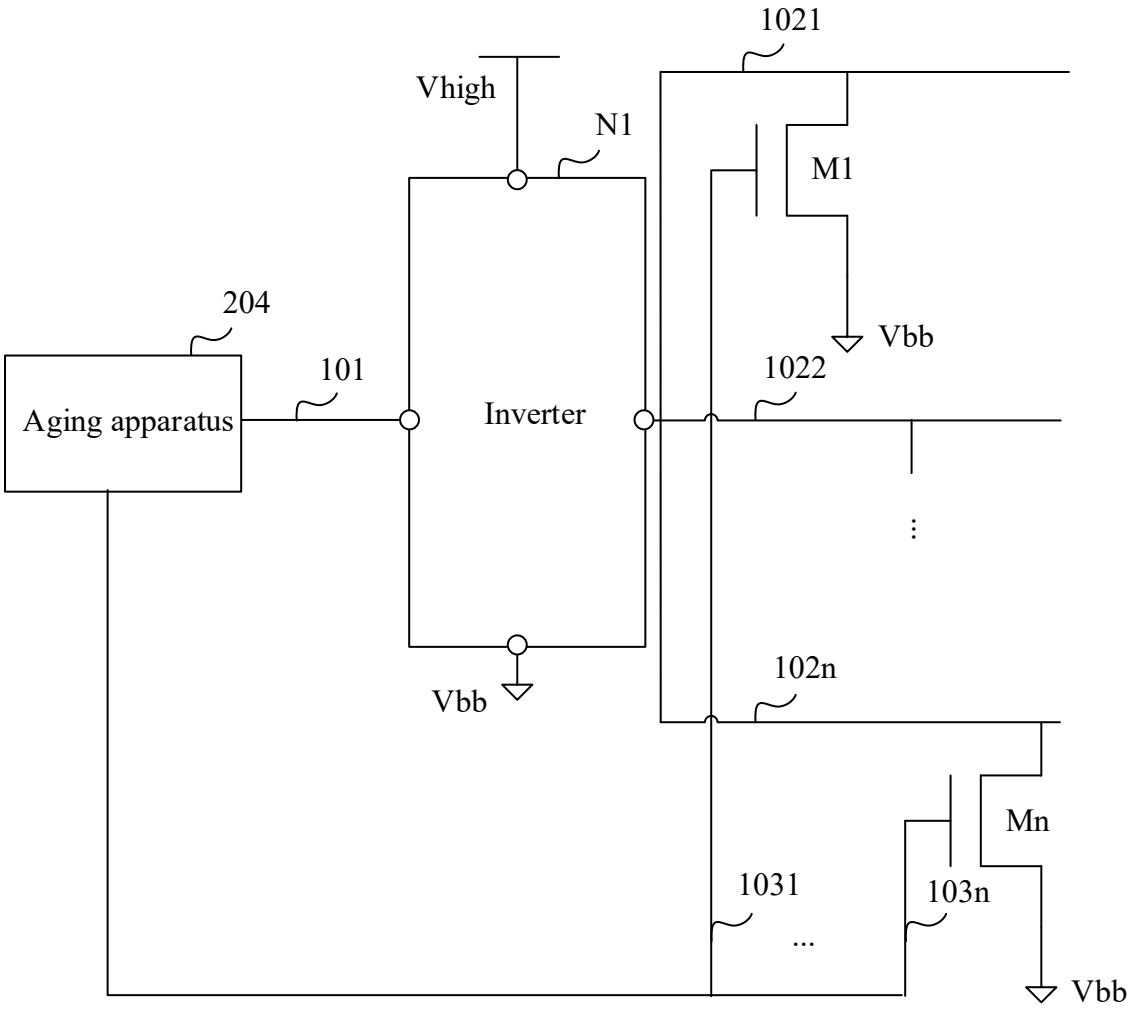
1021
Vhigh
N1
M1
204
Vbb
101
1022
Aging apparatus
Inverter
Vbb
102n
Mn
1031
103n
...
Vbb

FIG. 2

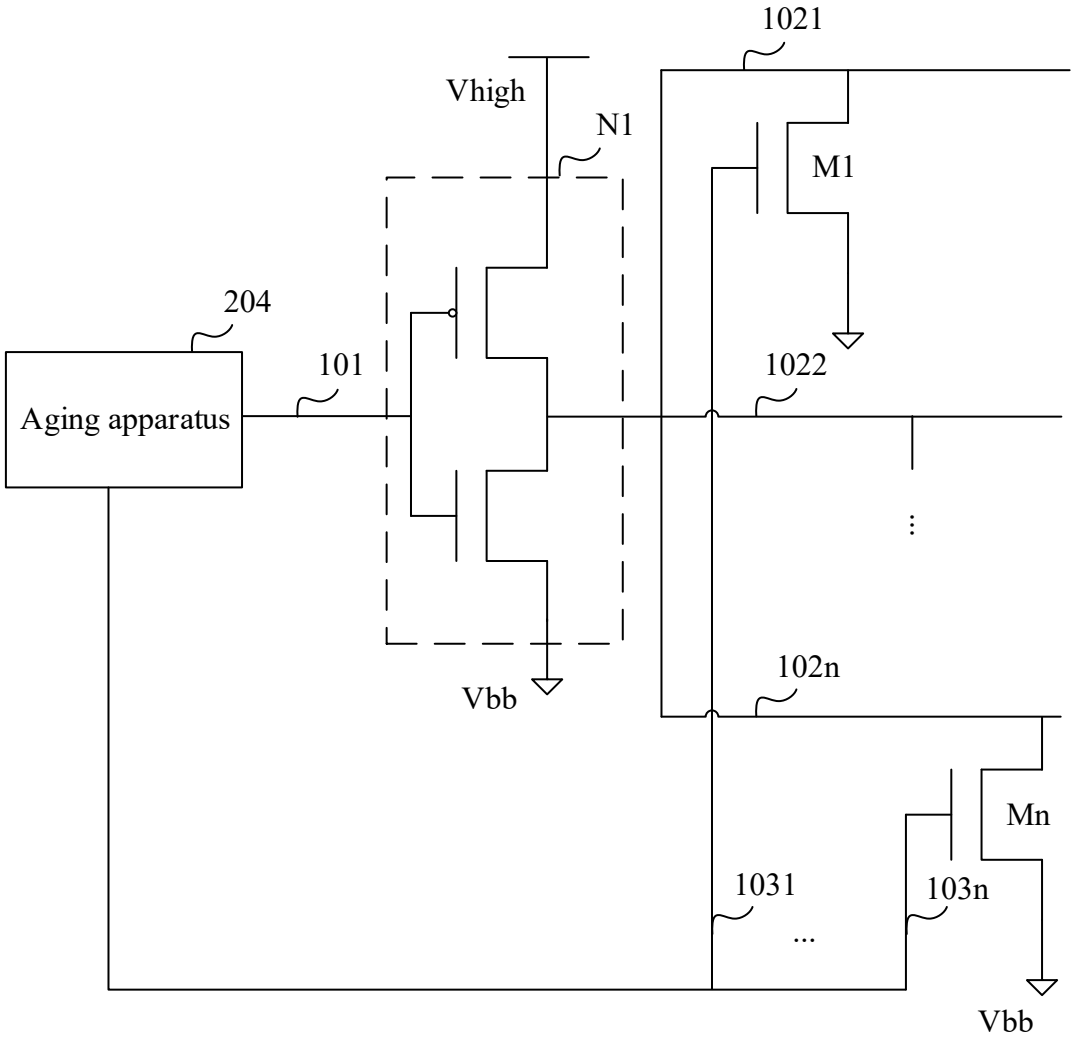
1021
Vhigh
N1
M1
204
101
1022
Aging apparatus
Vbb
102n
Mn
1031
103n
...
Vbb

FIG. 3

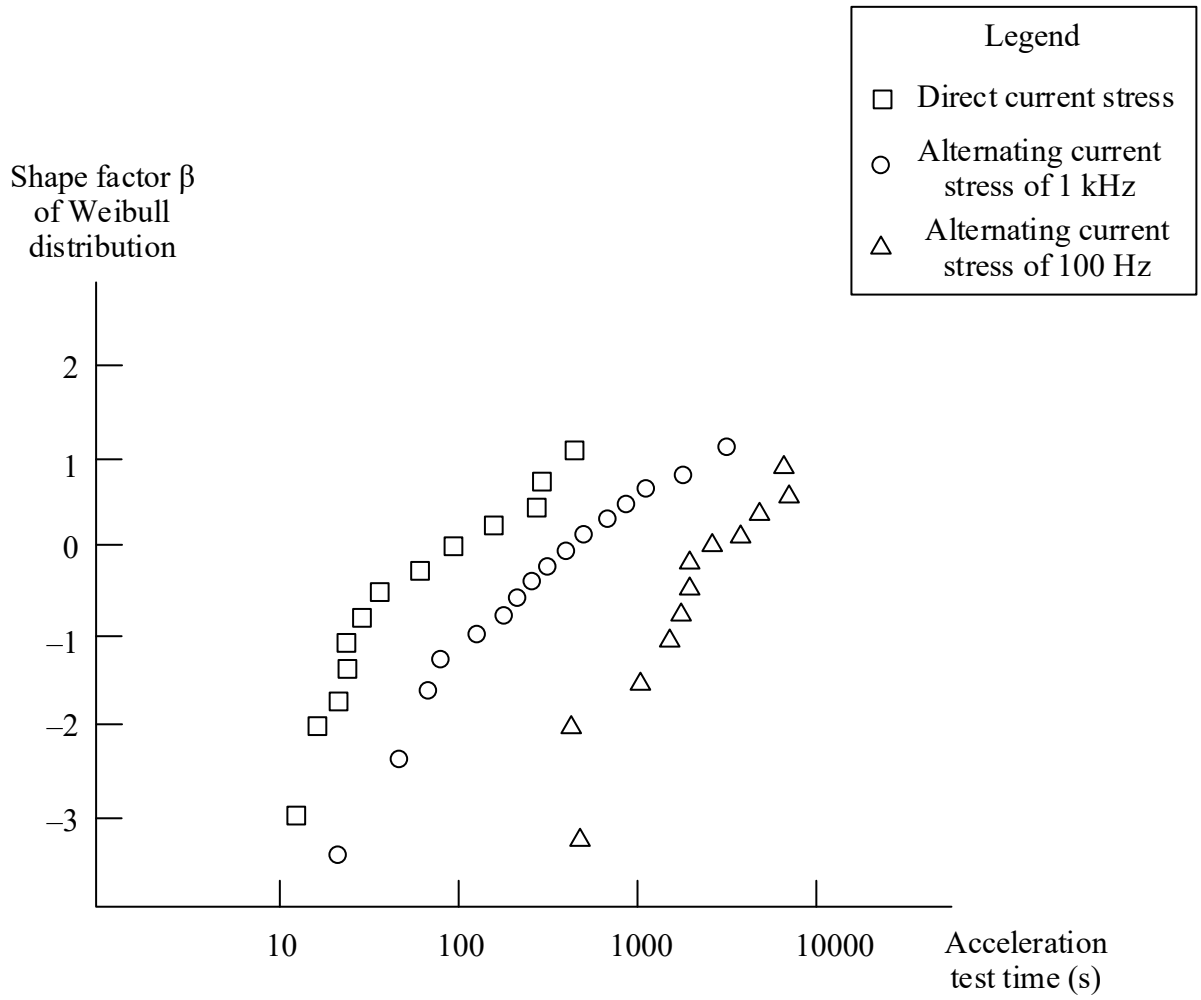
Legend
Direct current stress
Alternating current stress of 1 kHz
Alternating current stress of 100 Hz
Shape factor β of Weibull distribution
2
1
0
–1
–2
–3
10
100
1000
10000
Acceleration test time (s)

FIG. 4

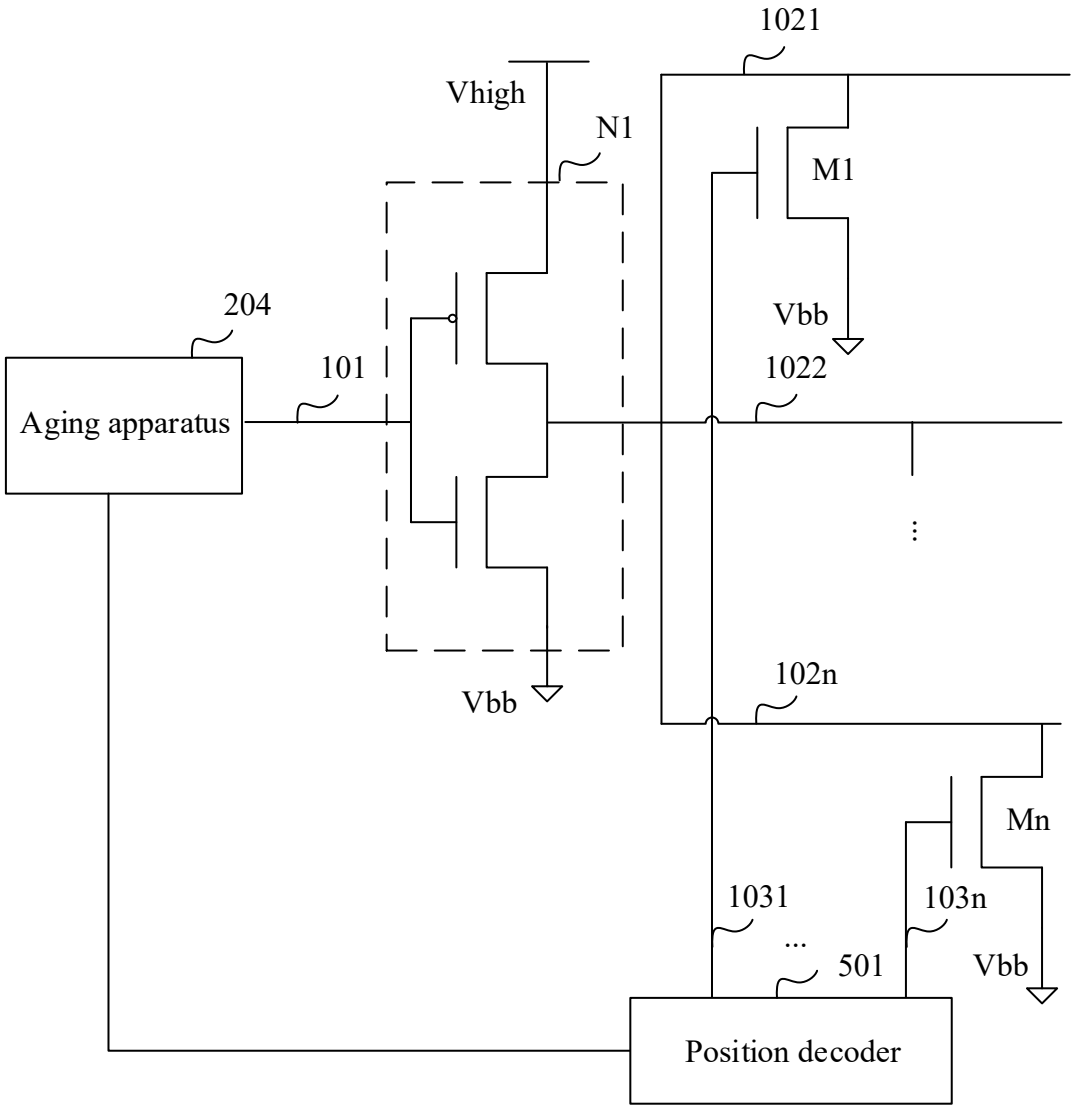
1021
Vhigh
N1
M1
204
Vbb
101
1022
Aging apparatus
Vbb
102n
Mn
1031
103n
...
501
Vbb
Position decoder

FIG. 5

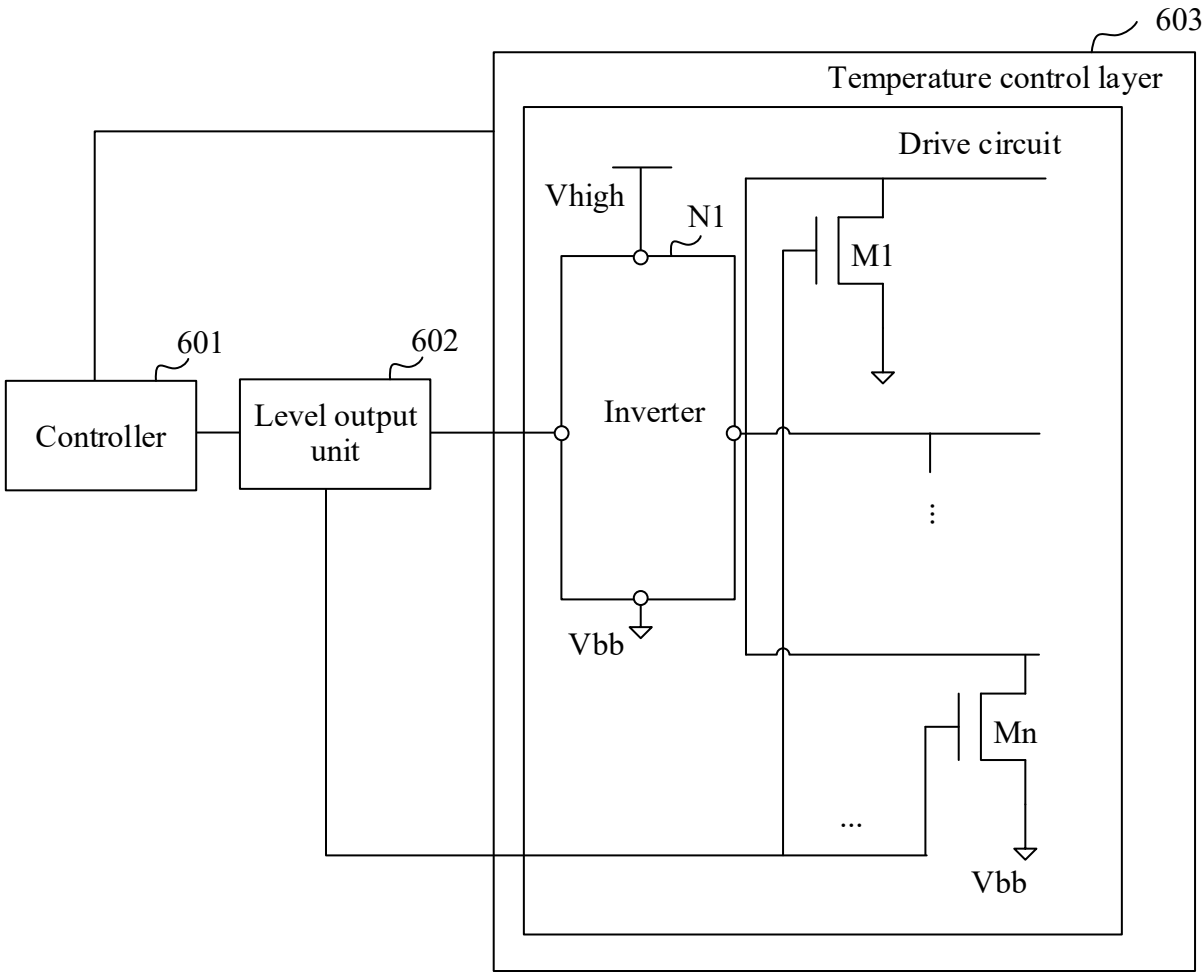
603
Temperature control layer
Drive circuit
Vhigh
N1
M1
601
602
Controller
Level output unit
Inverter
Vbb
Mn
Vbb

FIG. 6

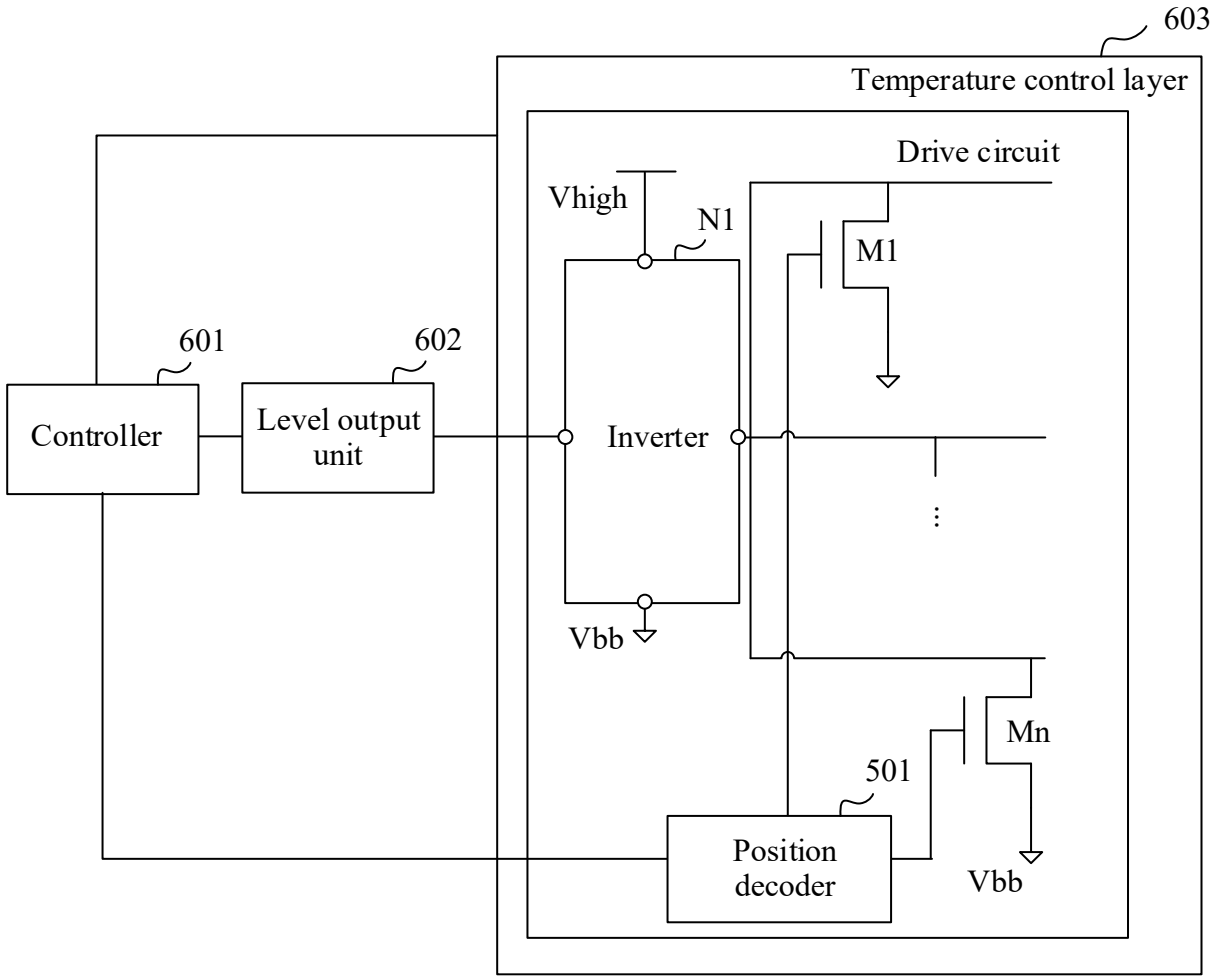
603
Temperature control layer
Drive circuit
Vhigh
N1
M1
601
602
Controller
Level output unit
Inverter
Vbb
Mn
501
Position decoder
Vbb

FIG. 7

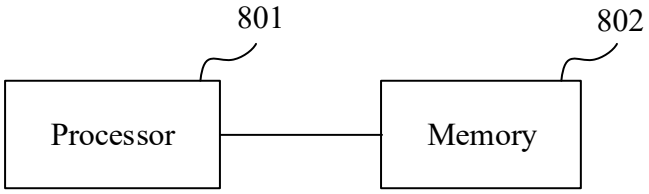
801
802
Processor
Memory

FIG. 8