DRAWINGS

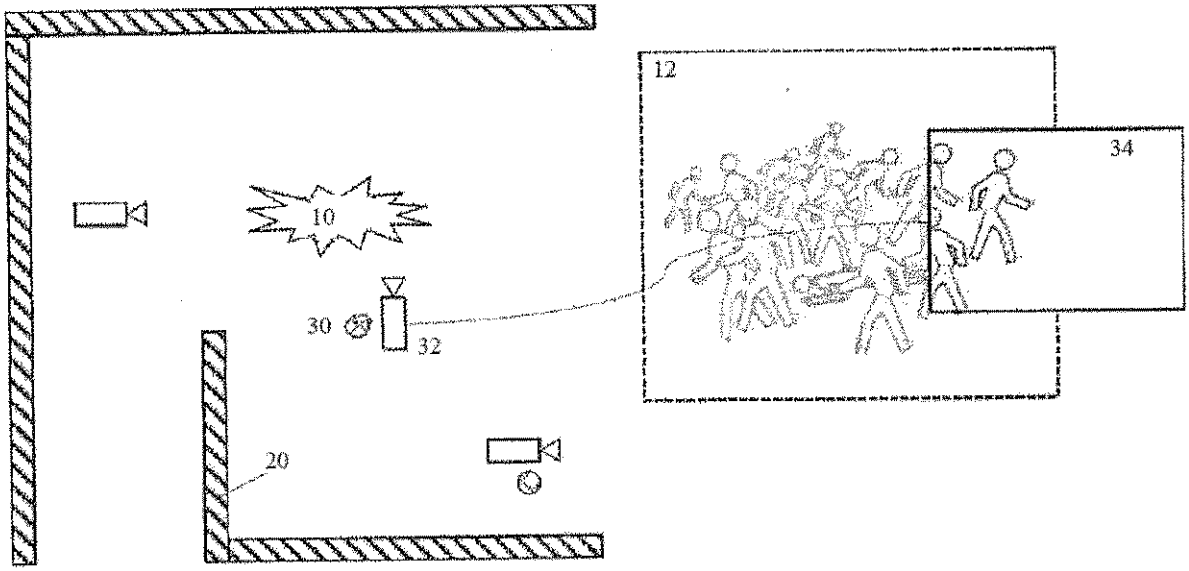

FIG. 1

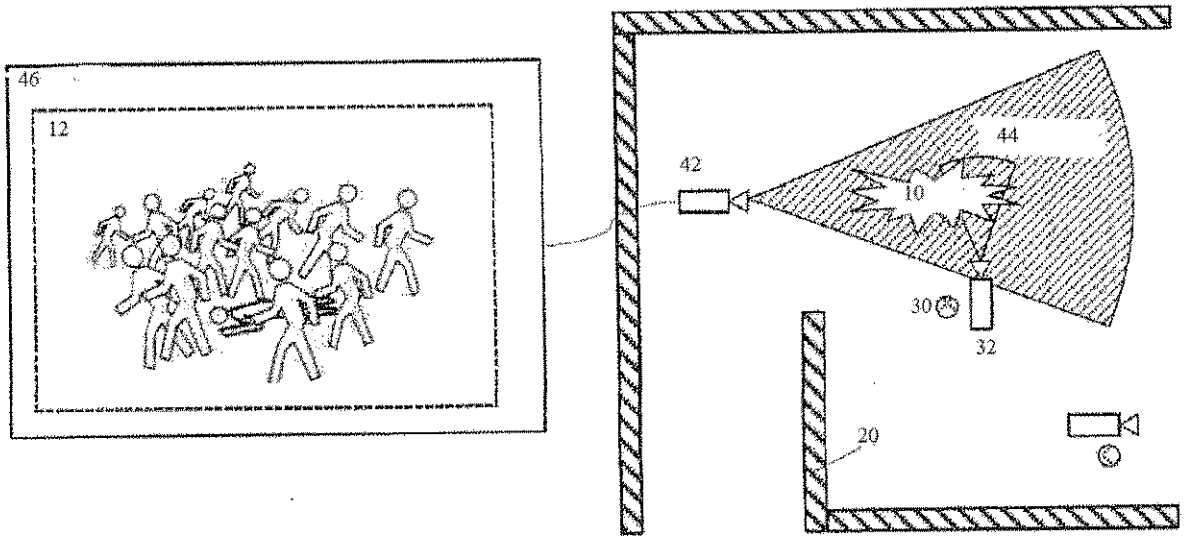

FIG. 2

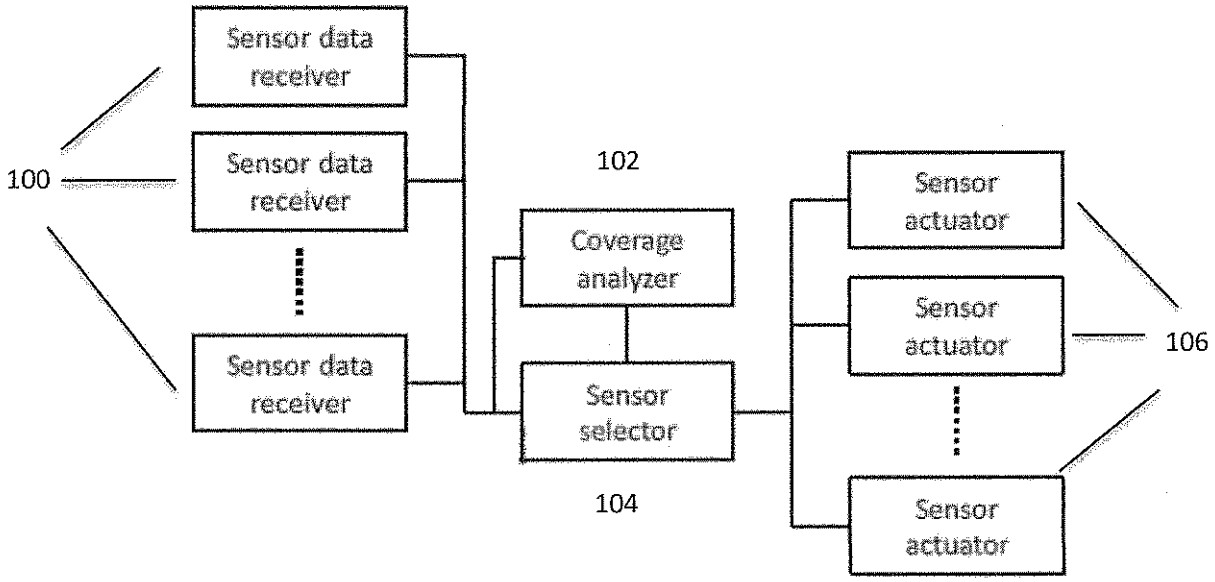
Sensor data receiver
Sensor data receiver
Sensor data receiver
100
102
Coverage analyzer
Sensor selector
104
Sensor actuator
Sensor actuator
Sensor actuator
106

FIG. 3

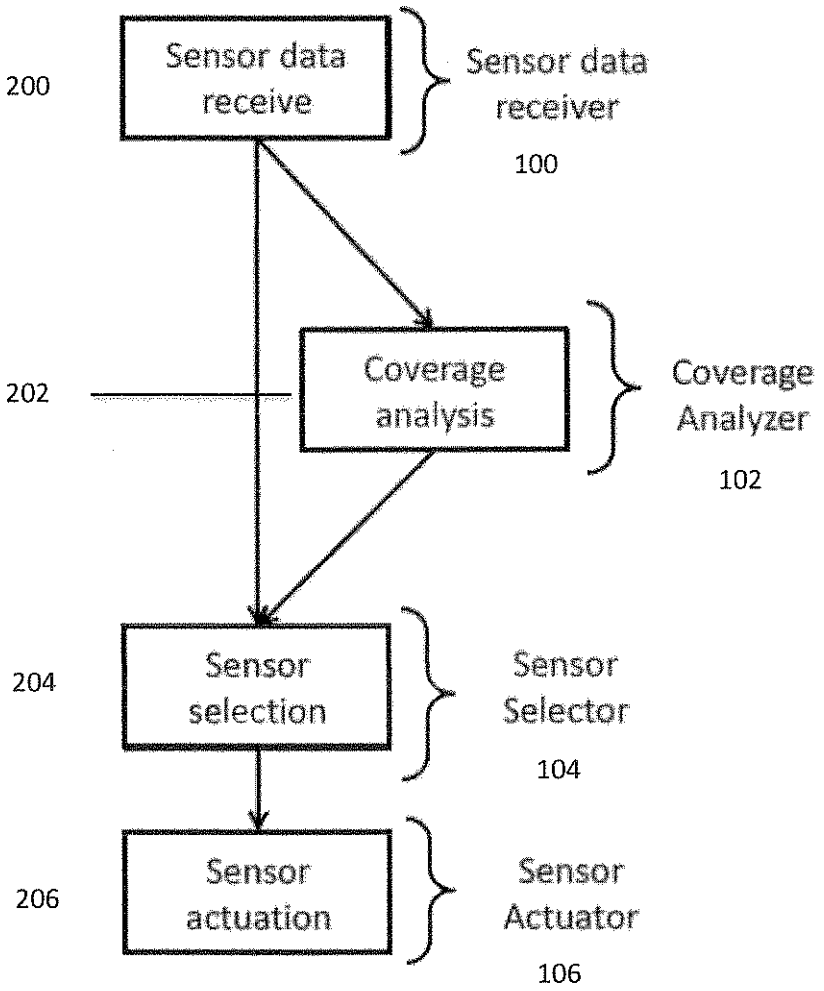
200
Sensor data receive
Sensor data receiver
100
202
Coverage analysis
Coverage Analyzer
102
204
Sensor selection
Sensor Selector
104
206
Sensor actuation
Sensor Actuator
106

FIG. 4

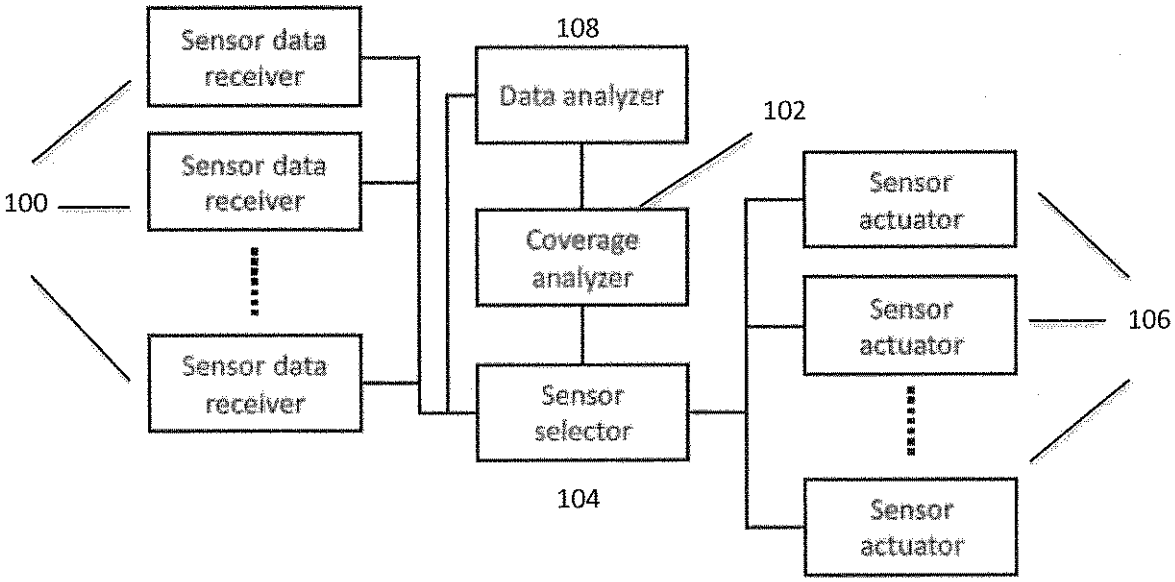
Sensor data receiver
Sensor data receiver
Sensor data receiver
100
108
Data analyzer
102
Coverage analyzer
Sensor selector
104
Sensor actuator
Sensor actuator
Sensor actuator
106

FIG. 5

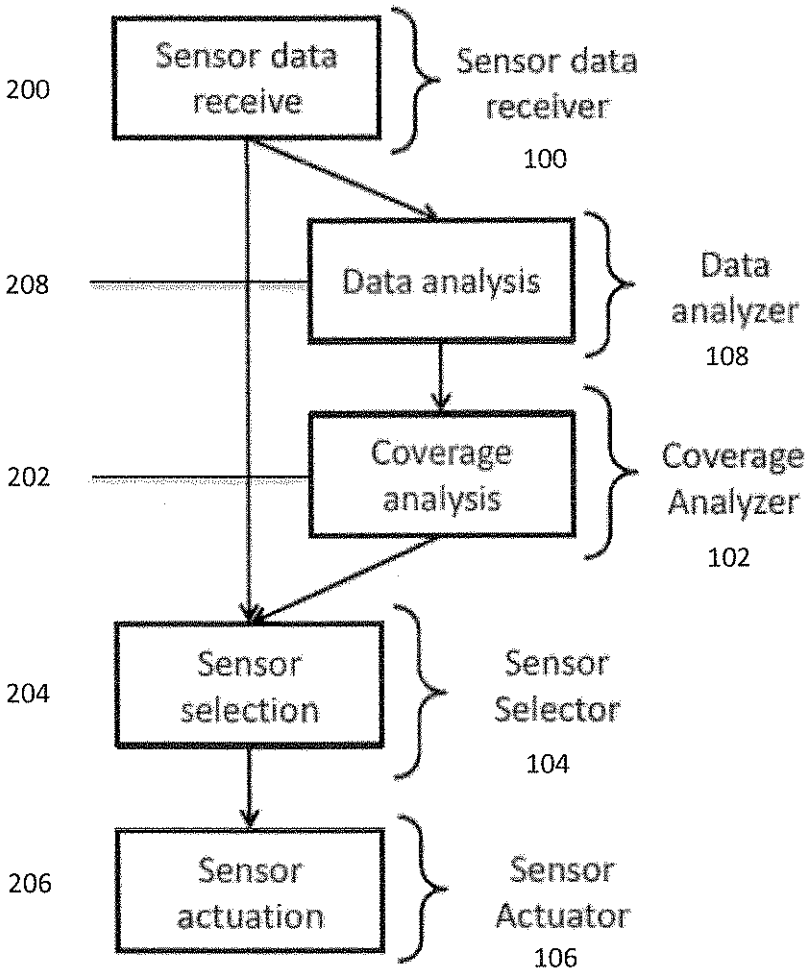
200
Sensor data receive
Sensor data receiver
100
208
Data analysis
Data analyzer
108
202
Coverage analysis
Coverage Analyzer
102
204
Sensor selection
Sensor Selector
104
206
Sensor actuation
Sensor Actuator
106

FIG. 6

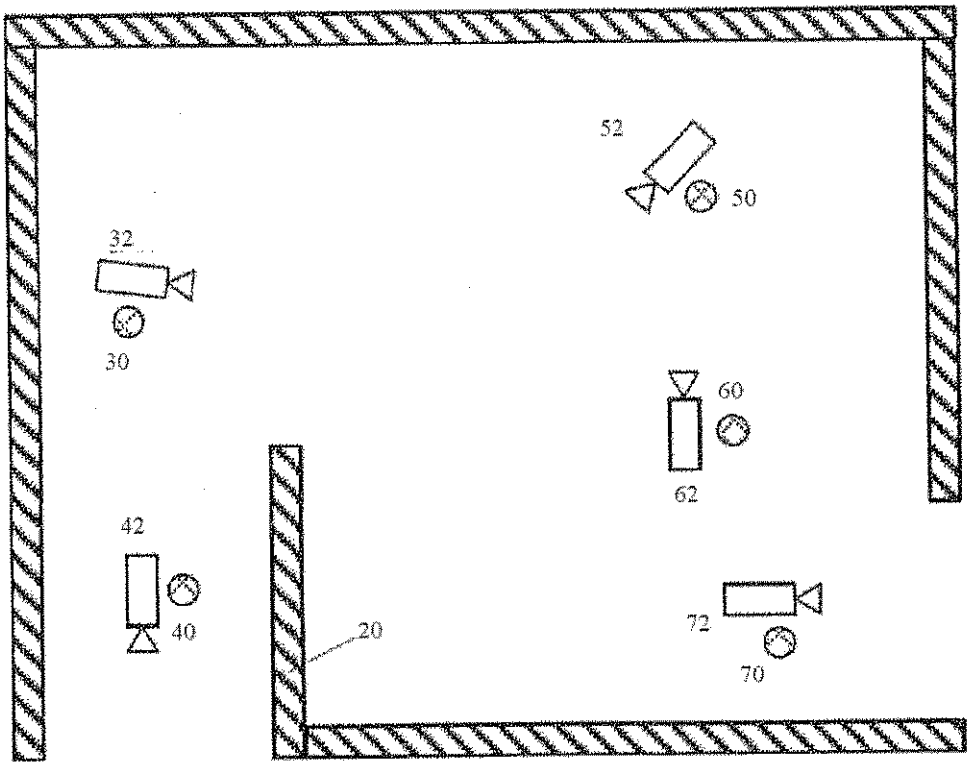
52
50
32
30
60
62
42
40
20
72
70

FIG. 7

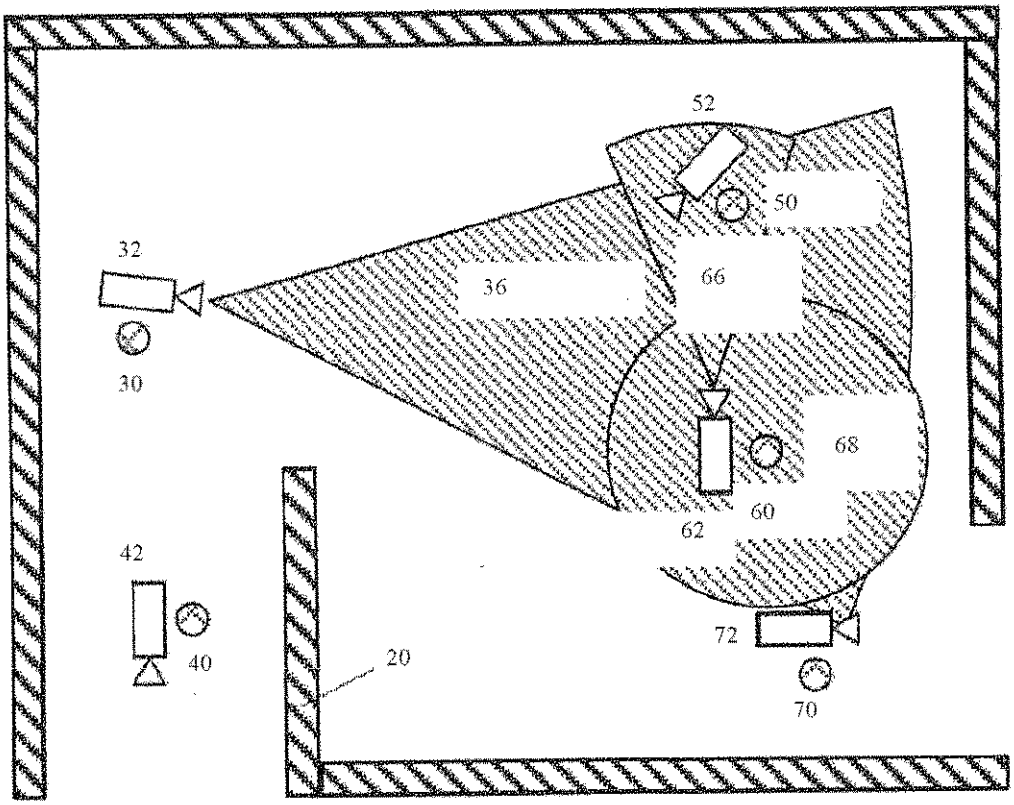
52
50
32
36
66
30
68
60
62
42
40
20
72
70

FIG. 8

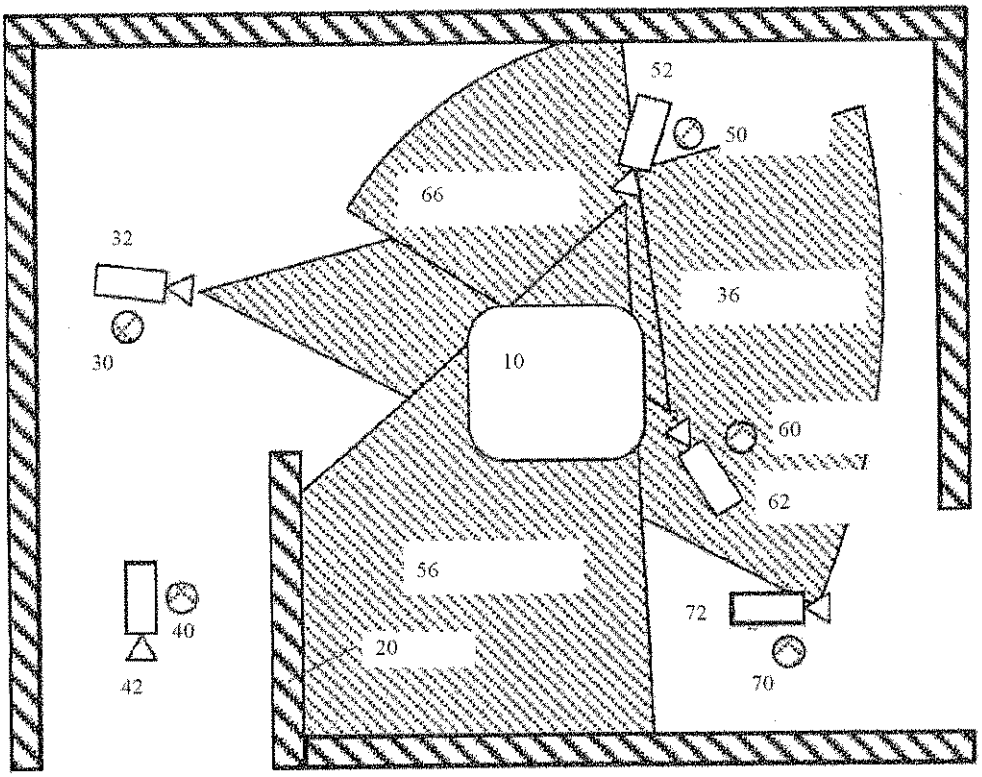
52
50
66
32
36
30
10
60
62
56
72
40
20
42
70

FIG. 9

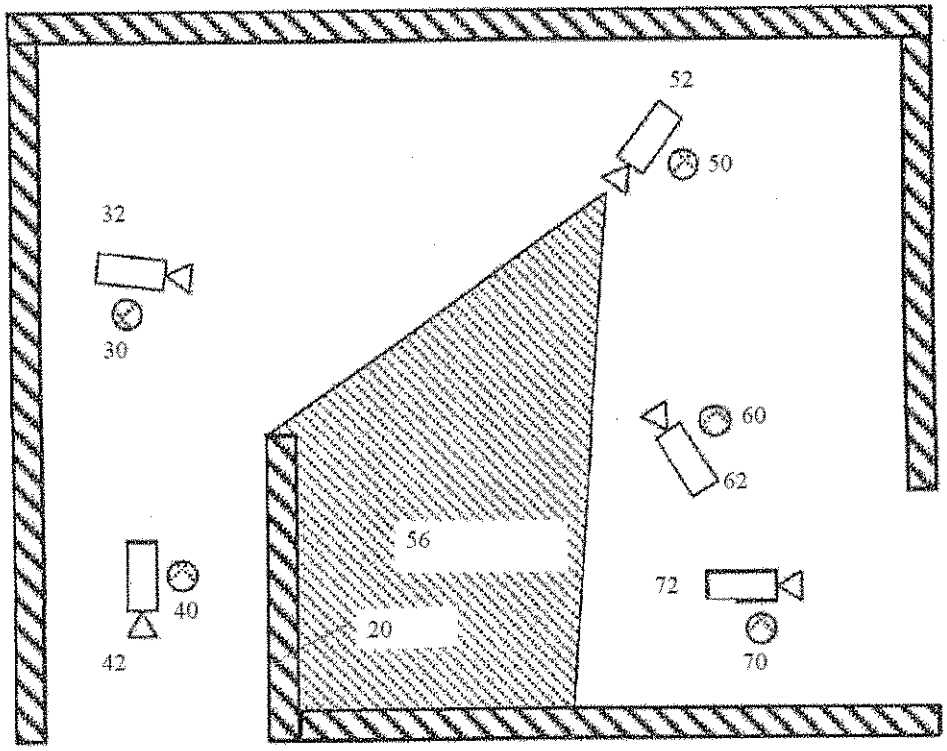
52
50
32
30
60
62
56
72
40
20
42
70

FIG. 10

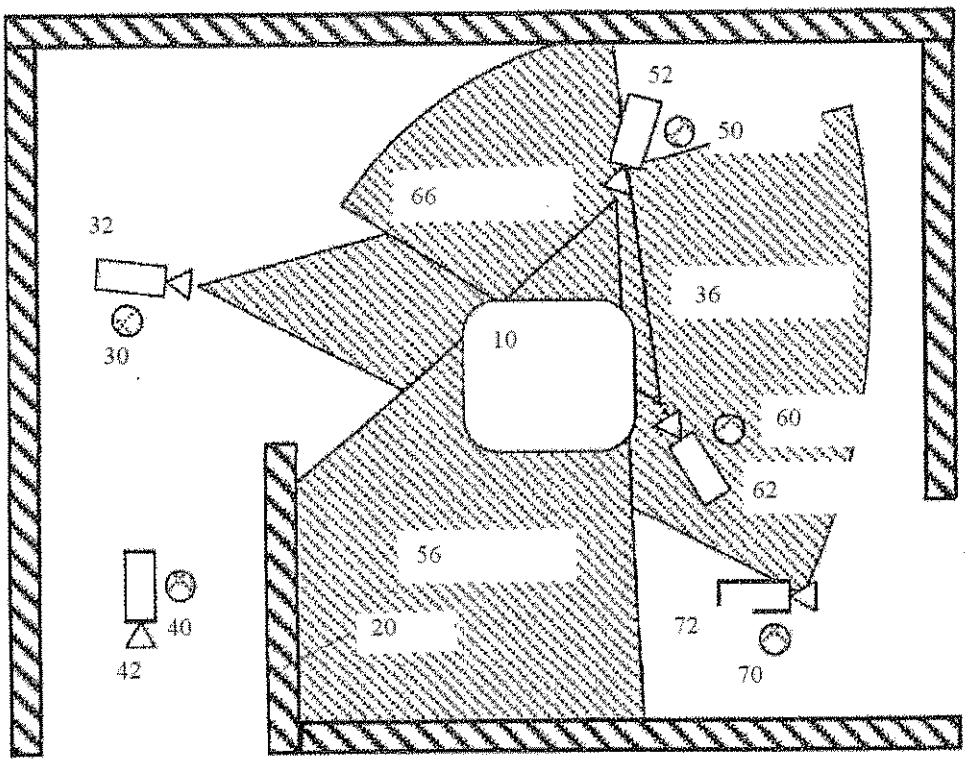
52
50
66
32
36
30
10
60
62
56
40
20
72
42
70

FIG. 11

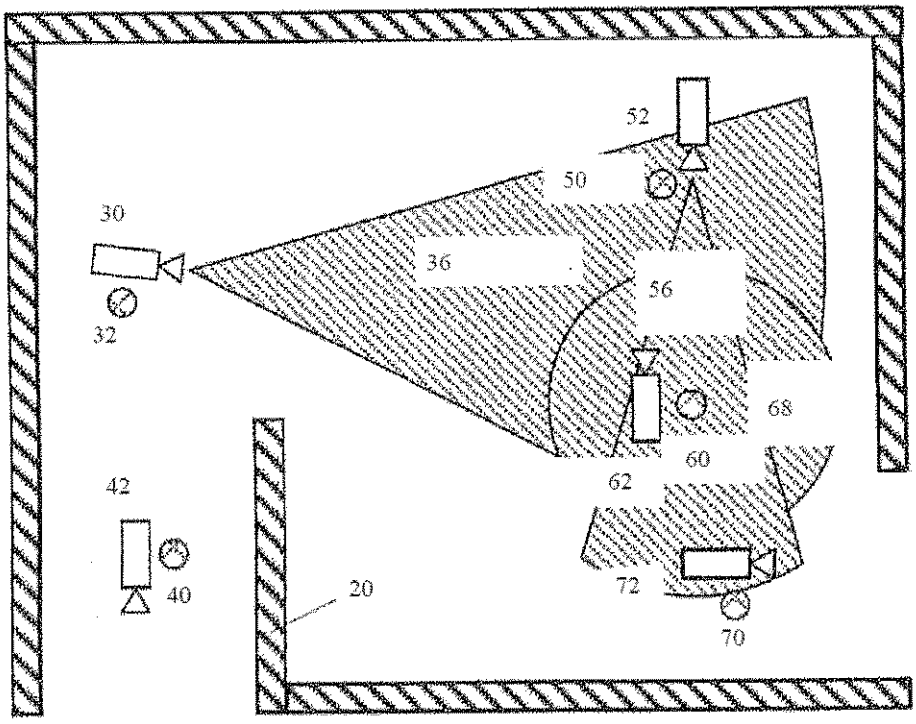
52
50
30
36
56
32
68
60
62
42
72
40
20
70

FIG. 12

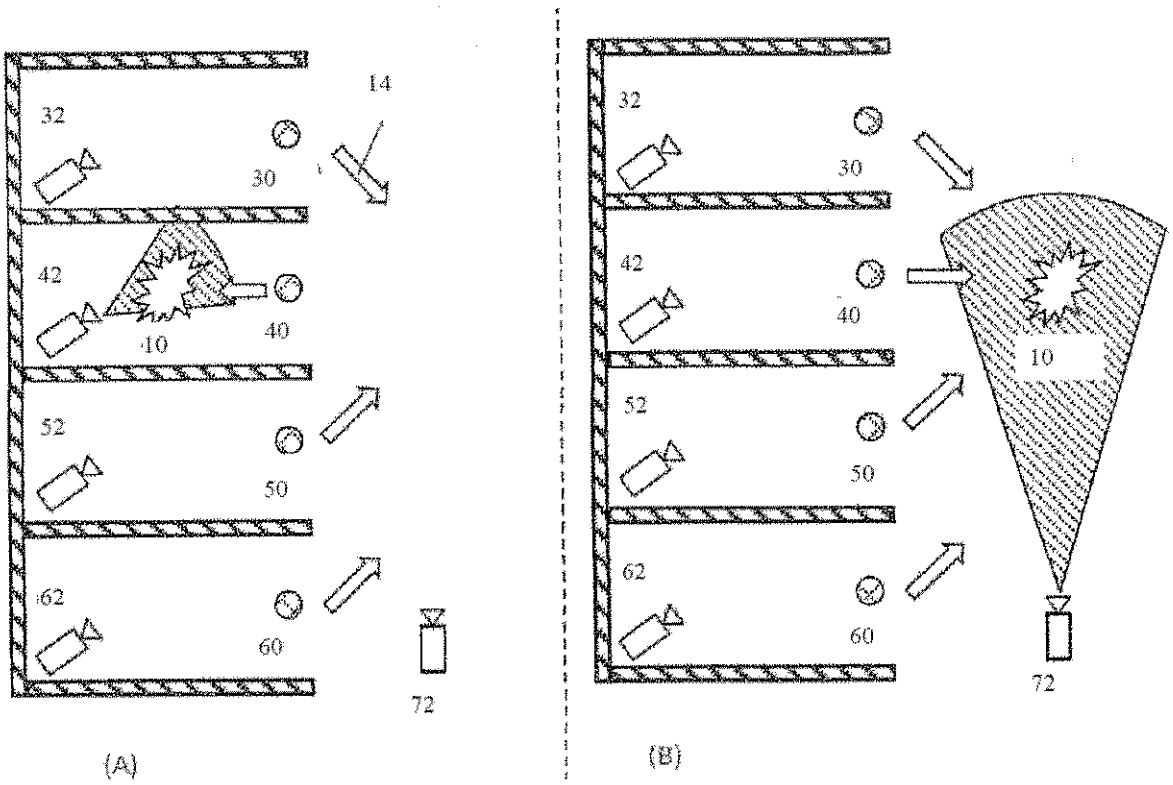

FIG. 13