RESIN SHEET

BACKGROUND OF THE INVENTION

Field of the Invention

[0001]

The present invention relates to a resin sheet.

Description of the Related Art

[0002]

A CSP (Chip Size/Scale Package) technique has recently been drawing attention in LSI package techniques. Among these techniques, as represented by WLP (Wafer Level Package), a package of only a chip, in which a general circuit board is not used, is one of packages which are especially drawing attention in terms of size reduction and high integration. A method of manufacturing WLP includes a method of aligning the positions of electrodes of a semiconductor chip and the conductor part of a wiring circuit board with each other and connecting them.

[0003]

Because the wiring circuit board is flexible, the handling properties of the wiring circuit board in a manufacturing step such as chip mounting are not good. Therefore, as shown in JP-A-2000-349198, JP-A-2001-44589, and the like, a method has conventionally been used in which a flexible wiring circuit board is first formed on a supporting substrate to obtain a wiring

circuit board having an appropriate rigidity, chip mounting is performed in a state in which the handling properties in the step are improved, and the supporting substrate is removed after the chip that is a rigid body is mounted.

[0004]

A semiconductor device in which the chip is mounted to the wiring circuit board and the supporting substrate is removed has a conductor for connecting that makes connecting and mounting to an external conductor such as an external circuit easy, as compared with a bare chip in which an electrode pad is merely exposed.

SUMMARY OF THE INVENTION

[0005]

The above-described wiring circuit board can be formed by applying a conventionally known technique of manufacturing a circuit board or an interposer such as a semi-additive method or a subtractive method to a base material in which a base insulating layer is formed on a support. However, the base insulating layer has been desired for having a high solvent resistance because various solvents are used in such a method.

[0006]

The present inventors have investigated a resin sheet for forming a wiring circuit board in order to solve the conventional problem. As a result, it has been found that the following

configuration is adopted to thereby make it possible to achieve a high solvent resistance, and the present invention has been completed.

[0007]

That is, the resin sheet according to the present invention is a resin sheet for forming a wiring circuit board that is connectable to electrodes that are formed on a semiconductor chip, wherein the weight reduction ratio after the resin sheet is thermally cured at 180°C for 1 hour and then immersed in methyl ethyl ketone at 20°C or more and 25°C or less for 2400 seconds is 1.0% by weight or less.

[0008]

According to the above-described configuration, the weight reduction ratio after the resin sheet is thermally cured at 180°C for 1 hour and then immersed in methyl ethyl ketone at 20°C or more and 25°C or less for 2400 seconds is 1.0% by weight or less. Because the weight reduction ratio after the resin sheet is immersed in methyl ethyl ketone at 20°C or more and 25°C or less for 2400 seconds is 1.0% by weight or less, it can be said that the elution in methyl ethyl ketone is suppressed. Therefore, a wiring circuit board with high precision can be manufactured when the elution in methyl ethyl ketone is suppressed and the resin sheet having a high solvent resistance is used.

[0009]

In the above-described configuration, the weight reduction ratio after the resin sheet is thermally cured at 180°C for 1 hour and then immersed in 0.5% by weight hydrofluoric acid at 20°C or more and 25°C or less for 60 seconds is preferably 1.0% by weight or less. Acid such as hydrofluoric acid may be used in the manufacturing of the wiring circuit board. When the weight reduction ratio after the resin sheet is thermally cured and then immersed in 0.5% by weight hydrofluoric acid at 20°C or more and 25°C or less for 60 seconds is 1.0% by weight or less, the resin sheet further has acid resistance. As a result, a wiring circuit board with higher precision can be manufactured when the resin sheet is used.

[0010]

In the above-described configuration, the weight reduction ratio after the resin sheet is thermally cured at 180°C for 1 hour and then immersed in a 3.0% by weight aqueous tetramethylammonium hydroxide solution at 20°C or more and 25°C or less for 240 seconds is preferably 1.0% by weight or less. Alkali such as an aqueous tetramethylammonium hydroxide solution may be used in the manufacturing of the wiring circuit board. When the weight reduction ratio after the resin sheet is thermally cured and then immersed in a 3.0% by weight aqueous tetramethylammonium hydroxide solution at 20°C or more and 25°C or less for 240 seconds is 1.0% by weight or less, the resin sheet further has alkali resistance. As a result, a wiring

circuit board with even higher precision can be manufactured when the resin sheet is used.

BRIEF DESCRIPTION OF THE DRAWINGS

[0011]

Fig. 1 is a sectional schematic view of a resin sheet according to the present embodiment;

Fig. 2 is a sectional schematic view for explaining a method of manufacturing a semiconductor device according to the present invention;

Fig. 3 is a sectional schematic view for explaining the method of manufacturing a semiconductor device according to the present invention;

Fig. 4 is a sectional schematic view for explaining the method of manufacturing a semiconductor device according to the present invention;

Fig. 5 is a sectional schematic view for explaining the method of manufacturing a semiconductor device according to the present invention;

Fig. 6 is a sectional schematic view for explaining the method of manufacturing a semiconductor device according to the present invention;

Fig. 7 is a sectional schematic view for explaining the method of manufacturing a semiconductor device according to the present invention;

Fig. 8 is a sectional schematic view for explaining the method of manufacturing a semiconductor device according to the present invention;

Fig. 9 is a sectional schematic view for explaining the method of manufacturing a semiconductor device according to the present invention;

Fig. 10 is a sectional schematic view for explaining the method of manufacturing a semiconductor device according to the present invention;

Fig. 11 is a sectional schematic view for explaining the method of manufacturing a semiconductor device according to the present invention; and

Fig. 12 is a sectional schematic view for explaining the method of manufacturing a semiconductor device according to the present invention.

DETAILED DESCRIPTION OF THE PREFERRED EMBODIMENT

[0012]

An embodiment of the present invention is explained with reference to the drawings. However, the present invention is not limited to these examples. Fig. 1 is a sectional schematic view of a resin sheet according to the present embodiment. In the present description, parts that are unnecessary for the explanation are omitted in the drawings, and there are parts that are enlarged or shrunk in the drawings in order to make

the explanation easy. The words such as "upper surface" and "lower surface" that are used to indicate up and down in the present invention are merely for explaining the positional relationship of layers, and they are not for limiting the actual vertical posture of a wiring circuit board and a semiconductor device.

[0013]

A resin sheet 20a (refer to Fig. 1) is a resin sheet for forming a wiring circuit board that is connectable to electrodes that are formed on a semiconductor chip. A method of forming a wiring circuit board using the resin sheet 20a and a method of forming a semiconductor device using the wiring circuit board are described in detail later using Figs. 2 to 11.

[0014]

The weight reduction ratio after the resin sheet 20a is thermally cured at 180°C for 1 hour and then immersed in methyl ethyl ketone at 20°C or more and 25°C or less for 2400 seconds is 1.0% by weight or less. The weight reduction ratio after the resin sheet 20a is immersed in methyl ethyl ketone is preferably 0.8% by weight or less. The lower the weight reduction ratio after the resin sheet 20a is immersed in methyl ethyl ketone is, the more preferable it is. However, the weight reduction ratio is 0% by weight or more or 0.01% by weight or more. Because the weight reduction ratio after the resin sheet 20a is immersed in methyl ethyl ketone at 20°C or more and 25°C or less for 2400

seconds is 1.0% by weight or less, it can be said that the elution in methyl ethyl ketone is suppressed. Therefore, a wiring circuit board with high precision can be manufactured when the elution in methyl ethyl ketone is suppressed and the resin sheet 20a having a high solvent resistance is used. The weight reduction ratio can be decreased by decreasing the content of an elastomer, using a resin having a high glass transition temperature, or increasing the crosslinking density after thermal curing.

[0015]

The reduction ratio after the resin sheet 20a is thermally cured at 180°C for 1 hour and then immersed in 0.5% by weight hydrofluoric acid at 20°C or more and 25°C or less for 60 seconds is preferably 1.0% by weight or less, more preferably 0.8% by weight or less, and further preferably 0.6% by weight or less. The lower the weight reduction ratio after the resin sheet 20a is immersed in 0.5% by weight hydrofluoric acid is, the more preferable it is. However, the weight reduction ratio is 0% by weight or more or 0.01% by weight or more. Acid such as hydrofluoric acid may be used in the manufacturing of the wiring circuit board. When the weight reduction ratio after the resin sheet 20a is thermally cured and then immersed in 0.5% by weight hydrofluoric acid at 20°C or more and 25°C or less for 60 seconds is 1.0% by weight or less, the resin sheet further has acid resistance. As a result, a wiring circuit board with higher

precision can be manufactured. The weight reduction ratio can be decreased by decreasing the content of an elastomer, using a resin having a high glass transition temperature, or increasing the crosslinking density after thermal curing.

[0016]

The weight reduction ratio after the resin sheet 20a is thermally cured at 180°C for 1 hour and then immersed in a 3.0% by weight aqueous tetramethylammonium hydroxide solution at 20°C or more and 25°C or less for 240 seconds is preferably 1.0% by weight or less, more preferably 0.8% by weight or less, and further preferably 0.6% by weight or less. The lower the weight reduction ratio after the resin sheet 20a is immersed in a 3.0% by weight aqueous tetramethylammonium hydroxide solution is, the more preferable it is. However, the weight reduction ratio is 0% by weight or more or 0.01% by weight or more. Alkali such as an aqueous tetramethylammonium hydroxide solution may be used in the manufacturing of the wiring circuit board. When the weight reduction ratio after the resin sheet 20a is thermally cured and then immersed in a 3.0% by weight aqueous tetramethylammonium hydroxide solution at 20°C or more and 25°C or less for 240 seconds is 1.0% by weight or less, the resin sheet further has alkali resistance. As a result, a wiring circuit board with even higher precision can be manufactured. The weight reduction ratio can be decreased by decreasing the content of an elastomer, using a resin having a high glass transition temperature, or increasing

the crosslinking density after thermal curing.

[0017]

The weight reduction ratio after the resin sheet 20a is thermally cured at 180°C for 1 hour and then immersed in SC-1 (having a composition of ammonia water (15% by weight) : hydrogen peroxide : water = 1 : 2 : 5 by weight ratio) at 20°C or more and 80°C or less for 100 seconds is preferably 1.0% by weight or less, more preferably 0.8% by weight or less, and further preferably 0.6% by weight or less. The lower the weight reduction ratio is, the more preferable it is. However, the weight reduction ratio is 0% by weight or more or 0.01% by weight or more. SC-1 may be used in a washing step of a wiring circuit board. When the weight reduction ratio is 1.0% by weight or less, the resin sheet 20a further has resistance to SC-1. As a result, a wiring circuit board with even higher precision can be manufactured. The weight reduction ratio can be decreased by decreasing the content of an elastomer, using a resin having a high glass transition temperature, or increasing the crosslinking density after thermal curing.

[0018]

The weight reduction ratio after the resin sheet 20a is thermally cured at 180°C for 1 hour and then immersed in SC-2 (having a composition of hydrochloric acid (38% by weight) : hydrogen peroxide : water = 1 : 2 : 5 by weight ratio) at 20°C or more and 80°C or less for 160 seconds is preferably 1.0% by

weight or less, more preferably 0.8% by weight or less, and further preferably 0.6% by weight or less. The lower the weight reduction ratio is, the more preferable it is. However, the weight reduction ratio is 0% by weight or more or 0.01% by weight or more. SC-2 may be used in a washing step of a wiring circuit board. When the weight reduction ratio is 1.0% by weight or less, the resin sheet 20a further has resistance to SC-2. As a result, a wiring circuit board with even higher precision can be manufactured. The weight reduction ratio can be decreased by decreasing the content of an elastomer, using a resin having a high glass transition temperature, or increasing the crosslinking density after thermal curing.

[0019]

The weight reduction ratio after the resin sheet 20a is thermally cured at 180°C for 1 hour and then immersed in 30% by weight hydrogen peroxide water at 20°C or more and 80°C or less for 840 seconds is preferably 1.0% by weight or less, more preferably 0.8% by weight or less, and further preferably 0.6% by weight or less. The lower the weight reduction ratio is, the more preferable it is. However, the weight reduction ratio is 0% by weight or more or 0.01% by weight or more. Hydrogen peroxide water may be used in the manufacturing of the wiring circuit board. When the weight reduction ratio is 1.0% by weight or less, the resin sheet 20a further has resistance to hydrogen peroxide water. As a result, a wiring circuit board with even

higher precision can be manufactured. The weight reduction ratio can be decreased by decreasing the content of an elastomer, using a resin having a high glass transition temperature, or increasing the crosslinking density after thermal curing.

[0020]

The weight reduction ratio after the resin sheet 20a is thermally cured at 180°C for 1 hour and then immersed in a solution for delipidization such as alkali, a water-soluble or water-insoluble agent, and a surfactant at 20°C or more and 80°C or less for 300 seconds is preferably 1.0% by weight or less, more preferably 0.8% by weight or less, and further preferably 0.6% by weight or less. The lower the weight reduction ratio is, the more preferable it is. However, the weight reduction ratio is 0% by weight or more or 0.01% by weight or more. The solution for delipidization may be used in the manufacturing of the wiring circuit board. When the weight reduction ratio is 1.0% by weight or less, the resin sheet 20a further has resistance to the solution for delipidization. As a result, a wiring circuit board with even higher precision can be manufactured. The weight reduction ratio can be decreased by decreasing the content of an elastomer, using a resin having a high glass transition temperature, or increasing the crosslinking density after thermal curing. Examples of the solution for delipidization can include Rapid Clean P-1000 manufactured by Nikko Metal Plating Co., Ltd.

[0021]

The weight reduction ratio after the resin sheet 20a is thermally cured at 180°C for 1 hour and then immersed in a 70% by weight aqueous nitric acid solution at 20°C or more and 80°C or less for 30 seconds is preferably 1.0% by weight or less, more preferably 0.8% by weight or less, and further preferably 0.6% by weight or less. The lower the weight reduction ratio is, the more preferable it is. However, the weight reduction ratio is 0% by weight or more or 0.01% by weight or more. The solution for delipidization may be used in the manufacturing of the wiring circuit board. When the weight reduction ratio is 1.0% by weight or less, the resin sheet 20a further has resistance to the solution for delipidization. As a result, a wiring circuit board with even higher precision can be manufactured. The weight reduction ratio can be decreased by decreasing the content of an elastomer, using a resin having a high glass transition temperature, or increasing the crosslinking density after thermal curing.

[0022]

The weight reduction ratio after the resin sheet 20a is thermally cured at 180°C for 1 hour and then immersed in a plating pretreatment liquid (composition: an aqueous alkali solution having a metal salt) at 20°C or more and 80°C or less for 30 seconds is preferably 1.0% by weight or less, more preferably 0.8% by weight or less, and further preferably 0.6% by weight

or less. The lower the weight reduction ratio is, the more preferable it is. However, the weight reduction ratio is 0% by weight or more or 0.01% by weight or more. A zincate solution may be used in the manufacturing of the wiring circuit board. When the weight reduction ratio is 1.0% by weight or less, the resin sheet 20a further has resistance to the zincate solution. As a result, a wiring circuit board with even higher precision can be manufactured. The weight reduction ratio can be decreased by decreasing the content of an elastomer, using a resin having a high glass transition temperature, or increasing the crosslinking density after thermal curing. Examples of the zincate solution can include Super Zincate Process SZII manufactured by Nikko Metal Plating Co., Ltd.

[0023]

The weight reduction ratio after the resin sheet 20a is thermally cured at 180°C for 1 hour and then immersed in a solution for nickel plating (composition: nickel nitrate, sodium hypophosphite, organic acid, etc.) at 20°C or more and 80°C or less for 1800 seconds is preferably 1.0% by weight or less, more preferably 0.8% by weight or less, and further preferably 0.6% by weight or less. The lower the weight reduction ratio is, the more preferable it is. However, the weight reduction ratio is 0% by weight or more or 0.01% by weight or more. The solution for nickel plating may be used in the manufacturing of the wiring circuit board. When the weight reduction ratio is 1.0% by weight

or less, the resin sheet 20a further has resistance to the solution for nickel plating. As a result, a wiring circuit board with even higher precision can be manufactured. The weight reduction ratio can be decreased by decreasing the content of an elastomer, using a resin having a high glass transition temperature, or increasing the crosslinking density after thermal curing. Examples of the solution for nickel plating can include KG-535-0 : KG-535-1 = 3 : 1 manufactured by Nikko Metal Plating Co., Ltd.

[0024]

The weight reduction ratio after the resin sheet 20a is thermally cured at 180°C for 1 hour and then immersed in a solution for gold plating (composition: a phosphate compound, a sulfite compound, an amine compound, etc.) at 20°C or more and 80°C or less for 1200 seconds is preferably 1.0% by weight or less, more preferably 0.8% by weight or less, and further preferably 0.6% by weight or less. The lower the weight reduction ratio is, the more preferable it is. However, the weight reduction ratio is 0% by weight or more or 0.01% by weight or more. The solution for nickel plating may be used in the manufacturing of the wiring circuit board. When the weight reduction ratio is 1.0% by weight or less, the resin sheet 20a further has resistance to the solution for nickel plating. As a result, a wiring circuit board with even higher precision can be manufactured. The weight reduction ratio can be decreased by decreasing the content of an elastomer, using a resin having a high glass transition temperature, or

increasing the crosslinking density after thermal curing. Examples of the solution for gold plating can include CF-500SS manufactured by Nikko Metal Plating Co., Ltd.

[0025]

The glass transition temperature after the resin sheet 20a is thermally cured at 180°C for 1 hour is preferably 100°C or more, more preferably 110°C or more, and further preferably 120°C or more. The resin sheet 20a has such a configuration, thereby making it possible to effectively exhibit solvent resistance, acid resistance, alkali resistance, and the like.

[0026]

A resin composition that forms the resin sheet 20a is not especially limited as long as it has the above-described characteristics and can be utilized to form a wiring circuit board that is connectable to electrodes that are formed on a semiconductor chip. However, examples of a preferable resin composition include an epoxy resin composition having the following components A to E. The component C may or may not be added as required.

Component A: epoxy resin

Component B: phenol resin

Component C: elastomer

Component D: inorganic filler

Component E: curing accelerator

[0027]

(Component A)

The epoxy resin (component A) is not particularly limited. Various kinds of epoxy resins can be used such as, for example, a triphenylmethane-type epoxy resin, a cresol novolac-type epoxy resin, a biphenyl-type epoxy resin, a modified bisphenol A-type epoxy resin, a bisphenol A-type epoxy resin, a bisphenol F-type epoxy resin, a modified bisphenol F-type epoxy resin, dicyclopentadiene-type epoxy resin, a phenol novolac-type epoxy resin and a phenoxy resin. These epoxy resins may be used alone or in combination of two or more thereof.

[0028]

An epoxy resin which has an epoxy equivalent of 150 to 250 and a softening point or melting point of 50 to 130°C and is solid at ordinary temperature is preferred from the viewpoint of securing toughness after curing of the epoxy resin and reactivity of the epoxy resin, and particularly a triphenylmethane-type epoxy resin, a cresol novolac-type epoxy resin and a biphenyl-type epoxy resin are preferred from the viewpoint of reliability.

[0029]

A modified bisphenol A-type epoxy resin having a flexible backbone of an acetal group, a polyoxyalkylene group or the like is preferred from the viewpoint of low stress, and a modified bisphenol A-type epoxy resin having an acetal group can be especially suitably used because it is liquid and has good

handling characteristics.

[0030]

The content of the epoxy resin (component A) is preferably set in a range of 1 to 10% by weight based on the total amount of the epoxy resin composition.

[0031]

(Component B)

The phenol resin (component B) is not particularly limited as long as it causes a curing reaction with the epoxy resin (component A). For example, a phenol novolac resin, a phenol aralkyl resin, a biphenyl aralkyl resin, a dicyclopentadiene-type phenol resin, a cresol novolac resin, a resol resin and the like are used. These phenol resins may be used alone or in combination of two or more thereof.

[0032]

As the phenol resin, a phenol resin having a hydroxyl equivalent of 70 to 250 and a softening point of 50 to 110°C is preferably used from the viewpoint of reactivity with the epoxy resin (component A), and particularly a phenol novolac resin can be suitably used because of its high curing reactivity. A phenol resin having low hygroscopicity, such as a phenol aralkyl resin and a biphenyl aralkyl resin, can also be suitably used from the viewpoint of reliability.

[0033]

The epoxy resin (component A) and the phenol resin

(component B) are blended in such a ratio that the total amount of hydroxyl groups in the phenol resin (component B) is preferably 0.7 to 1.5 equivalents, more preferably 0.9 to 1.2 equivalents, based on 1 equivalent of epoxy groups in the epoxy resin (component A) from the viewpoint of curing reactivity.

[0034]

(Component C)

An elastomer (component C) that is used with the epoxy resin (component A) and the phenol resin (component B) provides, to the epoxy resin component, plasticity that is necessary for followability (embedding property) into an adherend, and the structure of the elastomer is not especially limited as long as the elastomer exerts such an effect. For example, various kinds of acryl-based copolymers such as a polyacrylic acid ester, styrene acrylate-based copolymers, rubber polymers such as butadiene rubber, styrene-butadiene rubber (SBR), ethylene-vinyl acetate copolymer (EVA), isoprene rubber and acrylonitrile rubber can be used. Particularly, an acryl-based copolymers is preferably used because it is easily dispersed in the epoxy resin (component A) and has high reactivity with the epoxy resin (A component), so that the heat resistance and strength of the resin sheet 20a obtained can be improved. They may be used alone or in combination of two or more thereof.

[0035]

The acryl-based copolymer can be synthesized by, for

example, radical-polymerizing an acrylic monomer mixture prepared at a predetermined mixing ratio using a usual method. As a method for radical polymerization, a solution polymerization method using an organic solvent as a solvent, or suspension polymerization method of performing polymerization while dispersing a raw material monomer in water is used. Examples of the polymerization initiator used at this time include 2,2'-azobisisobutyronitrile, 2,2'-azobis-(2,4-dimethylvaleronitrile), 2,2'-azobis-4-methoxy-2,4-dimethylvaleronitrile and other azo-based or diazo-based polymerization initiators, and peroxide-based polymerization initiators such as benzoyl peroxide and methyl ethyl ketone peroxide. In the case of suspension polymerization, it is desirable to use a dispersant such as, for example, polyacrylamide or polyvinyl alcohol.

[0036]

The content of the elastomer (component C) is preferably 15% by weight to 30% by weight of the entire epoxy resin composition. When the content of the elastomer (component C) is 15% by weight or more, the resin sheet 20a easily achieves flexibility and plasticity. When the content is 30% by weight or less, decreases in the strength and the heat resistance of the cured product of the resin sheet 20a can be suppressed.

[0037]

The weight ratio (the weight of component C/the weight

of component A) of the elastomer (component C) to the epoxy resin (component A) is preferably set in a range of 3 to 4.7. When the weight ratio is 3 or more, the fluidity of the resin sheet 20a can be easily controlled, and when it is 4.7 or less, the tackiness of the resin sheet 20a can be good.

[0038]

(Component D)

The inorganic filler (component D) is not particularly limited, various kinds of previously known fillers can be used, and examples thereof include powders of quartz glass, talc, silica (fused silica, crystalline silica, etc.), alumina, aluminum nitride, silicon nitride and boron nitride. They may be used alone or in combination of two or more thereof.

[0039]

Among them, silica powder is preferably used in terms of solvent resistance, acid resistance, and alkali resistance, and among the silica powder, fused silica powder is more preferably used. Examples of the fused silica powder include a spherical fused silica powder and a crushed fused silica powder, but a spherical fused silica powder is especially preferably used from the viewpoint of fluidity. Particularly, those having an average particle diameter ranging from 0.1 to 30 μm are preferably used, and those having an average particle diameter ranging from 0.3 to 15 μm are especially preferably used.

[0040]

The average particle diameter can be derived by making a measurement with a laser diffraction scattering grain size distribution measuring device using a sample that is randomly extracted from a population.

[0041]

The content of the inorganic filler (component D) is preferably 70 to 95% weight, more preferably 72 to 93% by weight, further preferably 75 to 90% by weight based on the total amount of the epoxy resin composition. When the content of the inorganic filler (component D) is 70% by weight or more, solvent resistance, acid resistance, and alkali resistance can be good. When the content is 90% by weight or less, deteriorations in the flexibility and the fluidity of the resin sheet 20a can be suppressed.

[0042]

(Component E)

The curing accelerator (component E) is not particularly limited as long as it causes curing of the epoxy resin and the phenol resin to proceed, but organic phosphorus-based compounds such as triphenylphosphine and tetraphenylphosphonium tetraphenylborate, and imidazole-based compounds are suitably used from the viewpoint of curability and keeping quality. These curing accelerators may be used alone or in combination with other curing accelerators.

[0043]

The content of the curing accelerator (component E) is preferably 0.1 to 5 parts by weight based on 100 parts by weight of the total of the epoxy resin (component A) and the phenol resin (component B).

[0044]

(Other components)

To the epoxy resin composition may be added a flame retardant component in addition to the components A to E. As the flame retardant component, various kinds of metal hydroxides such as, for example, aluminum hydroxide, magnesium hydroxide, iron hydroxide, calcium hydroxide, tin hydroxide and conjugated metal hydroxides can be used. Aluminum hydroxide or magnesium hydroxide is preferably used from the viewpoint of being able to exhibit the flame retardance with a relatively small added amount and in terms of cost, and aluminum hydroxide is especially preferably used.

[0045]

The average particle diameter of the metal hydroxide is preferably 1 to 10 μm, further preferably 2 to 5 μm from the viewpoint of securing appropriate fluidity when the epoxy resin composition is heated. If the average particle diameter of the metal hydroxide is less than 1 μm, it becomes difficult to uniformly disperse the metal hydroxide in the epoxy resin composition, and sufficient fluidity may not be achieved during heating of the epoxy resin composition. If the average particle

diameter is more than 10 μm, there is the tendency that the flame retardant effect is reduced because the surface area per added amount of the metal hydroxide (component E) is decreased.

[0046]

As the flame retardant component, not only the above-mentioned metal hydroxides but also a phosphazene compound can be used. As the phosphazene compound, for example, SPR-100, SA-100 and SP-100 (each manufactured by Otsuka Chemical Co., Ltd.), FP-100 and FP-110 (each manufactured by FUSHIMI Pharmaceutical Co., Ltd.) and the like are available as commercial products.

[0047]

A phosphazene compound represented by the formula (1) or (2) is preferred because it exhibits a flame retardant effect even in a small amount, and the content of phosphorus elements contained in the phosphazene compound is preferably 12% by weight or more.

[Formula 1]

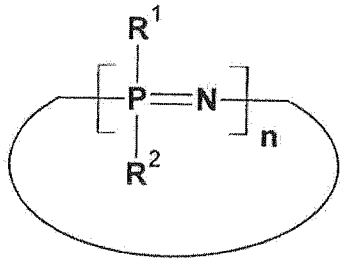

...(1)

(wherein, n is an integer of 3 to 25, R^1 and R^2 are the same or different, and are each a monovalent organic group having a functional group selected from the group consisting of an alkoxy

group, a phenoxy group, an amino group, a hydroxyl group and an allyl group.)

[Formula 2]

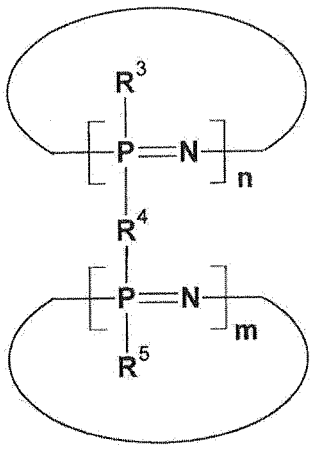

...(2)

(wherein, n and m are each independently an integer of 3 to 25. R^3 and R^5 are the same or different, and are each a monovalent organic group having a functional group selected from the group consisting of an alkoxy group, a phenoxy group, an amino group, a hydroxyl group and an allyl group. R^4 is a divalent organic group having a functional group selected from the group consisting of an alkoxy group, a phenoxy group, an amino group, a hydroxyl group and an allyl group.)

[0048]

A cyclic phosphazene oligomer represented by the formula (3) is preferably used from the viewpoint of stability and suppression of generation of voids.

[Formula 3]

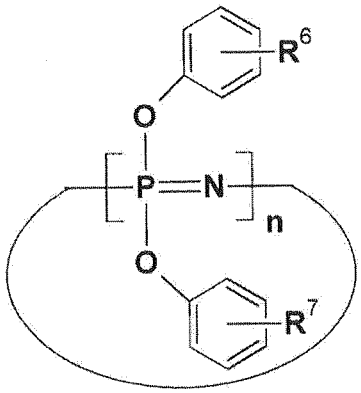

· · · (3)

(wherein, n is an integer of 3 to 25, and R^6 and R^7 are the same or different, and are each hydrogen, a hydroxyl group, an alkyl group, an alkoxy group or a glycidyl group.)

[0049]

As the cyclic phosphazene oligomer represented by the above formula (3), for example, FP-100 and FP-110 (each manufactured by FUSHIMI Pharmaceutical Co., Ltd.) and the like are available as commercial products.

[0050]

The content of the phosphazene compound is preferably 10 to 30% by weight based on the total amount of organic components including the epoxy resin (component A), the phenol resin (component B) and the elastomer (component D) and the curing accelerator (component E) and the phosphazene compound (other components) which are contained in the epoxy resin composition. That is, when the content of the phosphazene compound is less than 10% by weight of the entire organic component, the flame retardance of the resin sheet 20a tends to decrease. When the content exceeds 30% by weight of the entire organic component,

tack easily occurs on the surface of the resin sheet 20a, and workability tends to decrease.

[0051]

The above-mentioned metal hydroxide and phosphazene compound can also be used in combination to obtain the resin sheet 20a which is excellent in flame retardancy while retaining flexibility required for sheet sealing. By using the metal hydroxide and the phosphazene compound in combination, sufficient flame retardancy when only the metal hydroxide is used and sufficient flexibility when only the phosphazene compound is used can be obtained.

[0052]

When the metal hydroxide and the phosphazene compound are used together, the total amount thereof is preferably 70% by weight to 90% by weight and more preferably 75% by weight to 85% by weight of the entire epoxy resin composition. When the total amount is less than 70% by weight, the resin sheet 20a obtains sufficient flame retardance with difficulty, and when it exceeds 90% by weight, tack easily occurs on the surface of the resin sheet 20a, and workability tends to decrease.

[0053]

The epoxy resin composition may appropriately contain other additives such as pigments including carbon black as necessary in addition to the components described above.

[0054]

(Method for preparation of resin sheet)

A method for preparation of the resin sheet 20a will be described below. First, en epoxy resin composition is prepared by mixing the components described above. The mixing method is not particularly limited as long as the components are uniformly dispersed and mixed. Thereafter, for example, a varnish prepared by dissolving or dispersing the components in an organic solvent or the like is applied and formed into a sheet. Alternatively, a kneaded product may be prepared by kneading the blend components directly with a kneader or the like, and extruded to be formed into a sheet.

[0055]

As a specific preparation procedure using a varnish, the components A to E and other additives as necessary are appropriately mixed in accordance with a usual method, and the mixture is uniformly dissolved or dispersed in an organic solvent to prepare a varnish. Then, the varnish is applied onto a support of polyester or the like, and dried, whereby the resin sheet 20a can be obtained. A release sheet such as a polyester film may be laminated as necessary for protecting the surface of the resin sheet 20a.

[0056]

The organic solvent is not particularly limited, and various kinds of previously known organic solvents, for example, methyl ethyl ketone, acetone, cyclohexanone, dioxane, diethyl

ketone, toluene, ethyl acetate and the like can be used. They may be used alone or in combination of two or more thereof. Normally, it is preferred to use the organic solvent in such a manner that the solid concentration of the varnish ranges from 30 to 60% by weight.

[0057]

The thickness of the sheet after drying of the organic solvent is not particularly limited, but is normally set to preferably 5 to 100 μm, more preferably 20 to 70 μm, from the viewpoint of uniformity of the thickness and the amount of a residual solvent.

[0058]

On the other hand, when kneading is used, components including the components A to E and other additives as necessary are mixed using known means such as a mixer, and the mixture is then melt-kneaded to prepare a kneaded product. The method for performing melt-kneading is not particularly limited, and examples thereof include methods of performing melt-kneading by a known kneader such as a mixing roll, a pressure kneader or an extruder. Kneading conditions are not particularly limited as long as the temperature is equal to or higher than the softening points of the components described above, and the temperature is, for example, 30 to 150°C, and preferably 40 to 140°C, further preferably 60 to 120°C when considering the heat-curability of the epoxy resin, and the time is, for example,

1 to 30 minutes, preferably 5 to 15 minutes. In this way, a kneaded product can be prepared.

[0059]

Through molding the resulting kneaded product by extrusion molding, the resin sheet 20a can be obtained. Specifically, the kneaded product after melt-kneading is extrusion-molded while it is kept at a high temperature without being cooled, whereby the resin sheet 20a can be formed. The extrusion method for this purpose is not particularly limited, and examples thereof include a T die extrusion method, a rolling method, a roll kneading method, a co-extrusion method and a calender molding method. The extrusion temperature is not particularly limited as long as it is equal to or higher than the softening points of the components described above, but the extrusion temperature is, for example, 40 to 150°C, preferably 50 to 140°C, further preferably 70 to 120°C when considering the heat curability and moldability of the epoxy resin. In this way, the resin sheet 20a can be formed.

[0060]

The resin sheet 20a thus obtained may be laminated as necessary so as to have a desired thickness, and used. In other words, the resin sheet 20a may be used in the form of a monolayer structure, or may be used as a laminate formed by laminating the sealing resin sheet into a multilayer structure having two or more layers.

[0061]

(Method of Manufacturing Semiconductor Device)

Hereinafter, one example of the method of manufacturing a semiconductor device according to the present embodiment is explained in detail with reference to Figs. 2 to 12. Figs. 2 to 12 are sectional schematic views for explaining the method of manufacturing a semiconductor device according to the present embodiment.

[0062]

[Preparation of Support having Release Layer]

First, a support 1 is prepared (refer to Fig. 2). The support 1 preferably has a certain strength or more.

[0063]

The support 1 is not especially limited. However, examples include compound wafers such as a silicon wafer, a SiC wafer and a GaAs wafer; a glass wafer; SUS, 6-4Alloy; and metal foils such as a Ni foil and an Al foil. When a round shape in a planar view is adopted, a silicon wafer or a glass wafer is preferable. When a rectangular shape in a planar view is adopted, a SUS plate or a glass plate is preferable.

[0064]

Examples of the support 1 that can be used includes polyolefins such as low density polyethylene, straight chain polyethylene, medium density polyethylene, high density polyethylene, ultralow density polyethylene, random

copolymerized polypropylene, block copolymerized polypropylene, homopolypropylene, polybutene and polymethylpentene; an ethylene-vinyl acetate copolymer; an ionomer resin; an ethylene-(meth)acrylate copolymer; an ethylene-(meth)acrylate (random, alternate) copolymer; an ethylene-butene copolymer; an ethylene-hexene copolymer; polyurethane; polyesters such as polyethylene terephthalate and polyethylene naphthalate; polycarbonate; polyimide; polyetheretherketone; polyimide; polyetherimide; polyamide; wholly aromatic polyamide; polyphenylsulfide; aramid (paper); glass; glass cloth; a fluororesin; polyvinylchloride; polyvinylidene chloride; a cellulose based resin; a silicone resin; and paper.

[0065]

The support 1 may be used either alone or in combination of two or more types. The thickness of the support 1 is not especially limited. However, it is usually about 10 μm to 20 mm.

[0066]

Next, a release layer 5 is formed on the support 1.

[0067]

The weight reduction ratio after the release layer 5 is immersed in N-methyl-2-pyrrolidone (NMP) at 50°C for 60 seconds and then dried at 150°C for 30 minutes is preferably 1.0% by weight or more, more preferably 1.2% by weight or more, and further preferably 1.3% by weight or more. The higher the weight

reduction ratio is, the more preferable it is. However, the weight reduction ratio is 50% by weight or less or 30% by weight or less. Because the weight reduction ratio after the release layer 5 is immersed in N-methyl-2-pyrrolidone (NMP) at 50°C for 60 seconds and then dried at 150°C for 30 minutes is 1.0% by weight or more, it can be said that the release layer 5 is dissolved out into N-methyl-2-pyrrolidone and the weight reduction is sufficient. As a result, the release layer 5 can be easily peeled off by N-methyl-2-pyrrolidone. For example, the weight reduction ratio of the release layer 5 can be easily controlled by the solubility of raw materials in NMP. As raw materials having a higher solubility in NMP are selected, a release layer that is obtained by using such raw materials has a higher solubility in NMP.

[0068]

The dynamic hardness of the release layer 5 is preferably 10 or less, more preferably 9 or less, and further preferably 8 or less. The lower the dynamic hardness is, the more preferable it is. However, the dynamic hardness is 0.001 or more. When the dynamic hardness is 10 or less, a sufficient adhering strength of the release layer 5 to the adherend can be obtained.

[0069]

The surface hardness of the release layer 5 is preferably 10 GPa or less, more preferably 8 GPa or less, and further preferably 6 GPa or less. The lower the surface hardness is,

the more preferable it is. However, the surface hardness is 0.05 GPa or more. When the surface hardness is 10 GPa or less, the adhering strength between the release layer 5 and the adherend can be controlled.

[0070]

The release layer 5 has a weight loss rate, after it is immersed in a 3% aqueous tetramethylammonium hydroxide solution for 5 minutes, of preferably less than 1% by weight, more preferably less than 0.9% by weight, and further preferably less than 0.8% by weight. The smaller the weight loss rate is, the more preferable it is, and for example, it is 0% by weight or more, or 0.001% by weight or more. When the release layer 5 has a weight loss rate, after it is immersed in a 3% aqueous tetramethylammonium hydroxide solution for 5 minutes, of less than 1% by weight, solvent resistance (especially, solvent resistance to aqueous tetramethylammonium hydroxide solution) can be improved because the amount of the release layer that is dissolved into the 3% aqueous tetramethylammonium hydroxide solution is small. The weight loss rate of the release layer 5 can be controlled, for example, by the composition (solubility of diamine to aqueous tetramethylammonium hydroxide solution) of a diamine to be used.

[0071]

The increase amount of particles having a size of 0.2 μm or more on a silicon wafer, at the time when the release layer

5 is peeled off after it is bonded to the silicon wafer, is preferably less than 1,000 particles /6 inch wafer, more preferably less than 900 particles /6 inch wafer, and further preferably less than 800 particles /6 inch wafer, based on the amount of particles before the layer is bonded to the silicon wafer. When the increase amount of particles having a size of 0.2 μm or more on a silicon wafer, at the time when the release layer 5 is peeled off after it is bonded to the silicon wafer, is less than 1,000 particles /6 inch wafer based on the amount of particles before the layer is bonded to the silicon wafer, adhesive residue after peeling off can be suppressed.

[0072]

The shear adhering strength to a silicon wafer at 200°C after the release layer 5 is kept at that temperature for 1 minute is preferably 0.25 kg/5 × 5 mm or more, more preferably 0.30 kg/5 × 5 mm or more, and further preferably 0.50 kg/5 × 5 mm or more. The shear adhering strength to a silicon wafer at any temperature in a range of more than 200°C and 500°C or less after the release layer 5 is kept at that temperature for 3 minutes is preferably less than 0.25 kg/5 × 5 mm, more preferably less than 0.10 kg/5 × 5 mm, and further preferably less than 0.05 kg/5 × 5 mm. When the shear adhering strength to a silicon wafer at 200°C after the release layer 5 is kept at that temperature for 1 minute is 0.25 kg/5 × 5 mm or more, and the shear adhering strength to a silicon wafer at any temperature in a range of

more than 200°C and 500°C or less after the release layer 5 is kept at that temperature for 3 minutes is less than 0.25 kg/5 × 5 mm, the release layer 5 can be obtained that exhibits the peeling property at a higher temperature. The shear adhering strength of the release layer can be controlled by a number of functional groups contained in the release layer.

The temperature is not especially limited at which the shear adhering strength of the release layer to a silicon wafer is less than 0.25 kg/5 × 5 mm (preferably less than 0.10 kg/5 × 5 mm, more preferably 0.05 kg/5 × 5 mm), as long as it is any temperature in a range of more than 200°C and 500°C or less. However, it is preferably more than 220°C and 480°C or less, and more preferably more than 240°C and 450°C or less.

Even when the release layer is kept at 200°C or less, the shear adhering strength to a silicon wafer may be less than 0.25 kg/5 × 5 mm if the release layer is kept for a long time. Further, even when the release layer is kept at a temperature larger than 200°C, the shear adhering strength to a silicon wafer may not be less than 0.25 kg/5 × 5 mm if the release layer is kept for a short time.

That is, the "shear adhering strength to a silicon wafer at any temperature in a range of more than 200°C and 500°C or less after the release layer 5 is kept at that temperature for 3 minutes is less than 0.25 kg/5 × 5 mm" is an indicator to evaluate the peeling property at a higher temperature, and it does not

mean that the shear adhering strength to a silicon wafer is less than 0.25 kg/5 × 5 mm immediately when the temperature of the release layer 5 is "any temperature in a range of more than 200°C and 500°C or less." Nor does it mean that the peeling property is not exhibited when the temperature of the release layer 5 is not "any temperature in a range of more than 200°C and 500°C or less."

[0073]

When the release layer 5 has a weight loss rate, after it is immersed in N-methyl-2-pyrrolidone at 50°C for 60 seconds and dried at 150°C for 30 minutes, of 1.0% by weight or more, the material that forms the release layer 5 is not especially limited. However, examples thereof can include a polyimide resin, a silicone resin, an acrylic resin, a fluororesin, an epoxy resin, a urethane resin, and a rubber resin.

[0074]

The polyimide resin can be generally obtained by imidizing (dehydration synthesis) polyamic acid that is a precursor of the polyimide resin. Examples of methods of imidizing polyamic acid include previously known methods such as heating imidization, azeotropic dehydration, and chemical imidization. Among these, heating imidization is preferable. When the heating imidization is adopted, the heating process is preferably performed under an inert atmosphere such as a nitrogen atmosphere or in vacuum in order to prevent the polyimide resin from

deterioration due to oxidation.

[0075]

The polyamic acid can be obtained by charging acid anhydride and a diamine so that the acid anhydride and the diamine have substantially equal mole ratio in a solvent appropriately selected, and they are allowed to react with each other.

[0076]

The polyimide resin preferably has a constituent unit derived from a diamine having an ether structure. The diamine having an ether structure is not especially limited as long as it has an ether structure and is a compound having at least two terminals having an amine structure. Among the diamines having an ether structure, a diamine having a glycol skeleton is preferable. In the case where the polyimide resin has a constituent unit derived from a diamine having an ether structure, especially a constituent unit derived from a diamine having a glycol skeleton, the shear adhering strength can be decreased when the release layer 5 is heated to a high temperature such as 200°C or higher. According to the phenomenon, the present inventors surmise that the shear adhering strength decreases because of detachment of the ether structure or the glycol skeleton from the resin constituting the release layer when it is heated to a high temperature.

The detachment of the ether structure or the glycol skeleton from the resin constituting the release layer can be

confirmed from a decrease of the spectrum at 2,800 cm^{-1} to 3,000 cm^{-1} when the FT-IR (Fourier transform infrared spectroscopy) spectra before and after it is heated at 300°C for 30 minutes are compared.

[0077]

Examples of the diamine having a glycol skeleton can include diamines such as a diamine having a polypropylene glycol structure and having one amino group on each of the terminals, a diamine having a polyethylene glycol structure and having one amino group on each of the terminals, and a diamine having a polytetramethylene glycol structure and having one amino group on each of the terminals. Further, there can be exemplified a diamine having a plurality of these glycol structures and having one amino group on each of the terminals.

[0078]

The diamine having an ether structure preferably has a molecular weight in a range of 100 to 5,000, and more preferably 150 to 4,800. When the diamine having an ether structure has a molecular weight in a range of 100 to 5,000, the release layer 5 can be easily obtained having high adhering strength at a low temperature and a peeling property at a high temperature.

[0079]

Another diamine that does not have an ether structure can be used together besides the diamine having an ether structure for forming the polyimide resin. Examples of the another diamine

that does not have an ether structure can include an aliphatic diamine and an aromatic diamine. The another diamine that does not have an ether structure may be used together to control adhesive force with the adherend. The compounding ratio of the diamine having an ether structure to the another diamine that does not have an ether structure is preferably in a range of 100 : 0 to 20 : 80 by mole ratio, more preferably 99 : 1 to 30 : 70.

[0080]

Examples the aliphatic diamine include ethylene diamine, hexamethylene diamine, 1,8-diaminooctane, 1,10-diaminodecane, 1,12-diaminododecane, 4,9-dioxa-1,12-diaminododecane, and 1,3-bis(3-aminopropyl)-1,1,3,3-tetramethyldisiloxane(α, ω-bisaminopropyltetramethyldisiloxane). The aliphatic diamine has a molecular weight of normally 50 to 1,000,000, and preferably 100 to 30,000.

[0081]

Examples of the aromatic diamine include 4,4'-diaminodiphenylether, 3,4'-diaminodiphenylether, 3,3'-diaminodipheylether, m-phenylenediamine, p-phenylenediamine, 4,4'-diaminodiphenylpropane, 3,3'-diaminodiphenylmethane, 4,4'-diaminodiphenylsulfide, 3,3'-diaminodiphenylsulfide, 4,4'-diaminodiphenylsulfone, 3,3'-diaminodiphenylsulfone, 1,4-bis(4-aminophenoxy)benzene, 1,3-bis(4-aminophenoxy)benzene,

1,3-bis(3-aminophenoxy)benzene,
1,3-bis(4-aminophenoxy)-2,2-dimethylpropane, and
4,4'-diaminobenzophenone. The aromatic diamine has a molecular weight of normally 50 to 1,000, and preferably 100 to 500. The molecular weight in the present specification is measured by GPC (gel permeation chromatography), and it is a value (weight average molecular weight) calculated in terms of polystyrene.

[0082]

Examples of the acid anhydride include 3,3',4,4'-biphenyl tetracarboxylic acid dianhydride, 2,2',3,3'-biphenyl tetracarboxylic acid dianhydride, 3,3',4,4'-benzophenone tetracarboxylic acid dianhydride, 2,2',3,3'-benzophenone tetracarboxylic acid dianhydride, 4,4'-oxydiphthalic acid dianhydride, 2,2-bis(2,3-dicarboxyphenyl)hexafluoropropane dianhydride, 2,2-bis(3,4-dicarboxyphenyl)hexafluoropropane dianhydride (6FDA), bis(2,3-dicarboxyphenyl)methane dianhydride, bis(3,4-dicarboxyphenyl)methane dianhydride, bis(2,3-dicarboxyphenyl)sulfone dianhydride, bis(3,4-dicarboxyphenyl)sulfone dianhydride, pyromellitic acid dianhydride, and ethylene glycol bistrimellitic acid dianhydride. These may be used alone or two types or more may be used together.

[0083]

Examples of the solvent at the time of reaction of the acid anhydride with the diamine include N,N-dimethylacetoamide,

N-methyl-2-pyrrolidone, N,N-dimethylformamide, and cyclopentanone. These may be used alone or a plurality of them may be mixed and used. In addition, a nonpolar solvent such as toluene or xylene may be appropriately mixed and used in order to adjust the solubility of the raw material or the resin.

[0084]

For example, the release layer 5 can be produced as follows. First, a solution containing the polyamic acid is prepared. Next, the solution is applied onto a substrate to form a coating film having a prescribed thickness, and then the coating film is dried under a prescribed condition. Examples of the substrate that can be used include metal foils such as SUS 304, a 6-4 alloy, an aluminum foil, a copper foil, and a Ni foil; polyethylene terephthalate (PET); polyethylene; polypropylene; and a plastic film and paper whose surfaces are coated with a peeling agent such as a fluorine-based peeling agent or a long chain alkylacrylate-based peeling agent. Examples of the application method include, but are not especially limited to, roll coating, screen coating, gravure coating, and spin coating. For the drying condition, for example, the drying temperature is in a range of 50°C to 150°C and a drying time is in a range of 3 minutes to 30 minutes. Thus, the release layer 5 according to the present embodiment can be obtained.

[0085]

The support 1 having the release layer 5 can be produced

by transferring the release layer 5 to the support 1. The support 1 having the release layer 5 may also be produced by directly applying a solution containing polyamic acid to the support 1 to form a coating film, and then drying the coating film under a prescribed condition.

[0086]

[Formation of Wiring Circuit Board]

Then, a wiring circuit board 2 is formed on the release layer 5 of the support 1. A conventionally known technique of manufacturing a circuit board or an interposer such as a semi-additive method or a subtractive method may be applied to a method of forming the wiring circuit board on the support having the release layer. When the wiring circuit board is formed on the support, a good dimensional stability and good handling properties of a thin wiring circuit board can be obtained during the manufacturing step. One example of the method of forming a wiring circuit board is shown below.

[0087]

[Formation of Base Insulating Layer]

As shown in Fig. 3, the resin sheet 20a as a base insulating layer is attached onto the release layer 5 of the support 1. The thickness of the resin sheet 20a is preferably 3 μm to 50 μm.

[0088]

Then, an opening h1 is formed at a position where a conductor

22 for external connection is to be formed (refer to Fig. 4). A conventionally known method can be adopted as a method of forming the opening h1. For example, exposing and developing can be performed using a photosensitive material to form the opening h1. The shape of the opening is not especially limited. However, it is preferably a circular shape. The diameter can be appropriately set. However, it can be, for example, 5 μm to 500 μm. After that, the opening h1 is thermally cured. As adoptable conditions of the thermal curing, the heating temperature is preferably 20°C to 150°C and more preferably 40°C to 120°C, and the heating time is preferably 0.5 minutes to 60 minutes and more preferably 1 minute to 30 minutes.

[0089]

[Formation of Metal Film for Contact]

Next, a metal film 211 for contact is formed in the opening h1 (refer to Fig. 5). When the metal film 211 is formed, a better electrical connection can be obtained and corrosion resistance can be improved. The method of forming the metal film 211 is not especially limited. However, plating is preferable, and examples of the material for the metal film include single metals such as copper, gold, silver, platinum, lead, tin, nickel, cobalt, indium, rhodium, chromium, tungsten and ruthenium; and alloys made of two types or more of them. Among them, preferred examples include gold, tin, and nickel, and examples of the structure of the metal film include a two-layered structure having Ni as

the underlayer and Au as the top layer.

[0090]

[Formation of Seed Film, Lower Conductive Path, and Conductive layer]

Then, a seed film (metal thin film) 23a is formed as necessary that is for depositing metal materials well on a conductive layer 23 and the wall surface of a portion that is to be a conductive path 25 (refer to Fig. 6). The seed film 23a can be formed by sputtering for example. Examples of the material for the seed film include single metals such as copper, gold, silver, platinum, lead, tin, nickel, cobalt, indium, rhodium, chromium, tungsten and ruthenium; and alloys made of two types or more of them. The thickness of the conductive layer 23 is not especially limited, and it may be appropriately selected in a range of 1 nm to 500 nm. The shape of the conductive path 25 is preferably a cylindrical shape. The diameter is 5 μm to 500 μm, and preferably 5 μm to 300 μm. After that, the conductive layer 23 having a prescribed wiring pattern and the conductive path 25 are formed. The wiring pattern can be formed by electroplating for example. After that, a portion of the seed film in which there is no conductive layer 23 is removed.

[0091]

Then, as shown in Fig. 7, a plating resist r1 is applied onto the conductive layer 23 excluding the portion where the conductive path is to be formed, a resist r2 is applied on the

entire lower surface of the support 1, and the electroplating is performed to form a conductive path 24.

[0092]

[Formation of Adhesive Layer]

Then, the plating resists r1 and r2 are removed, and an adhesive layer 20b is formed having epoxy and polyimide as main components so that the exposed conductive layer 23 and the conductive path 24 are embedded. Then, the adhesive layer is etched with an alkaline solution or the like so that the upper end surface of the conductive path 24 is exposed from the upper surface of the adhesive layer as a terminal part (refer to Fig. 8).

[0093]

[Formation of Metal Film to End Surface of Conductor for Connection]

Then, as shown in Fig. 9, a conductor 21 for connection is formed by electroplating for example on the upper end surface of the conductive path 24. The conductor 21 for connection can be formed by, for example, a nickel film or a gold film. With above described, the wiring circuit board is formed. In the step of forming the wiring circuit board, various solvents, especially methyl ethyl ketone, may be used. However, the weight reduction ratio after the resin sheet 20a is thermally cured at 180°C for 1 hour and then immersed in methyl ethyl ketone at 20°C or more and 25°C or less for 2400 seconds is 1.0% by

weight or less. Therefore, it can be said that the elution in methyl ethyl ketone is suppressed. As a result, a wiring circuit board with high precision can be manufactured when the resin sheet 20a is used.

When the weight reduction ratio after the resin sheet 20a is thermally cured at 180°C for 1 hour and then immersed in 0.5% by weight hydrofluoric acid at 20°C or more and 25°C or less for 60 seconds is 1.0% by weight or less, the resin sheet 20a further has acid resistance. In this case, a wiring circuit board with higher precision can be manufactured even when acid is used in the step of forming the wiring circuit board.

When the weight reduction ratio after the resin sheet 20a is thermally cured at 180°C for 1 hour and then immersed in a 3.0% by weight aqueous tetramethylammonium hydroxide solution at 20°C or more and 25°C or less for 240 seconds is 1.0% by weight or less, the resin sheet 20a further has alkali resistance. In this case, a wiring circuit board with higher precision can be manufactured even when alkali is used in the step of forming the wiring circuit board.

[0094]

[Mounting Step, Peeling Step, and Dicing]

Then, a chip is mounted to the obtained wiring circuit board 2 to which the support 1 is peelably attached. Specifically, an electrode 31 of a semiconductor chip 3 is arranged to face the conductor 21 for connection of the wiring circuit board 2

(refer to Fig. 10), and then both are connected to mount the semiconductor chip 3 to the wiring circuit board 2 (refer to Fig. 11). In Fig. 11, protrusion of each of the conductor 21 for connection and the electrode 31 after mounting is omitted. After that, the adhesive layer 20b is aged, and each chip 3 on the wiring circuit board 2 is sealed with a resin (not shown). A resin sheet for sealing or a liquid resin sealing material may be used for resin sealing. After that, the support 1 is peeled together with the release layer 5 with the surface of the release layer 5 opposite from the support 1 being an interface. Examples of the peeling method include peeling by a solvent using N-methyl-2-pyrrolidone and peeling by heating. In a case of peeling by heating, the lower limit of the heating temperature can be 50°C, 80°C, 100°C, 150°C, or 180°C for example. The upper limit of the temperature during the peeling step is preferably 260°C, more preferably 230°C, and further preferably 200°C. The time for maintaining the above-described temperature condition in the peeling step differs depending on the temperature. However, it is preferably 0.05 minutes to 120 minutes, and more preferably 0.1 minutes to 30 minutes. In steps on and after the mounting step, it is preferable not to be exposed to heat of 260°C or more. With this, melting of solder and the like can be suppressed. With this, a semiconductor device 4 can be obtained in which the semiconductor chip 3 is mounted to the wiring circuit board 2.

A process of imparting soldering balls may be performed on the wiring circuit board 2 in which the support 1 is peeled off.

[0095]

One example of the method of manufacturing a semiconductor device according to the present embodiment has been explained above. However, the method of manufacturing a semiconductor device of the present invention is not limited to the above-described example, and it is appropriately changeable within the scope of the gist of the present invention.

EXAMPLES

[0096]

Preferred examples of this invention are explained in detail below. However, the materials, the compounding amounts, and the like described in these examples are not meant to limit the gist of this invention to these as long as there is no description of limitation in particular. "Parts" in the examples means "parts by weight."

[0097]

(Example 1)

<Production of Resin Sheet>

The following (a) to (f) were dissolved in methyl ethyl ketone to obtain a resin composition solution having a concentration of 26.8% by weight. This resin composition

solution was applied onto a release-treated film (release liner) made of a silicone release-treated polyethylene terephthalate film having a thickness of 38 μm, and then dried at 130°C for 2 minutes. With this, a resin sheet having a thickness of 100 μm was produced.

(a) Acrylic resin ("TEISAN RESIN SG-70L" manufactured by Nagase ChemteX Corporation) 50 parts

(b) Cresol novolac epoxy resin ("EOCN1020-4P" manufactured by NIPPON KAYAKU Co., Ltd.) 4.752 parts

(c) Biphenylene type phenol resin ("MEH-7851SS" manufactured by MEIWA PLASTIC INDUSTRIES, INC.) 4.848 parts

(d) Silica filler ("SE2050MC(60%)" manufactured by Admatechs.) 17.78 parts

(e) Silane coupling agent ("KBM-303" manufactured by Shin-Etsu Chemical Co., Ltd.) 0.08 parts

(f) Imidazole compound as curing accelerator ("2PHZ-PW" manufactured by SHIKOKU CHEMICALS CORPORATION) 0.101 parts

[0098]

(Example 2)

<Production of Resin Sheet>

The following (a) to (f) were blended by a mixer, kneaded at 120°C for 2 minutes by a biaxial kneading machine, and then extruded from a die to obtain a resin sheet having a thickness of 20 μm.

(a) Epoxy resin ("YSLV-80XY" manufactured by Nippon Steel

Chemical Co., Ltd) 280 parts

(b) Phenol resin ("MEH-7851-SS" manufactured by MEIWA PLASTIC INDUSTRIES, INC.) 300 parts

(c) Silica filler ("FB-9454" manufactured by DENKI KAGAKU KOGYO KABUSHIKI KAISHA) 3300 parts

(d) Silane coupling agent ("KBM-403" manufactured by Shin-Etsu Chemical Co., Ltd.) 10 parts

(e) Curing accelerator ("2P4MHZ-PW" manufactured by SHIKOKU CHEMICALS CORPORATION) 6 parts

(f) Carbon ("#40" manufactured by Mitsubishi Chemicals Corporation) 10 parts

[0099]

(Measurement of Weight Reduction Ratio When Resin Sheet Immersed in Hydrofluoric Acid)

Each of the resin sheets according to Examples 1 and 2 was first cut out into a size of 30 mm × 100 mm, and dried at 120°C for 30 minutes. After that, the temperature was returned to room temperature in a desiccator, and the weight before immersing was measured. Then, the resultant was immersed in 0.5% by weight hydrofluoric acid at 23°C for 60 seconds. The washing with ultrapure water for 3 minutes was performed twice at room temperature (23°C), and the resultant was dried at 120°C for 30 minutes. After that, the temperature was returned to room temperature in a desiccator, and the weight after immersing was measured.

The weight reduction ratio was obtained by the following formula. The result is shown in Table 1.

(Weight Reduction Ratio (% by weight [wt%])) = [1 - ((Weight After Immersing)/(Weight Before Immersing))] × 100

[0100]

(Measurement of Weight Reduction Ratio When Resin Sheet Immersed in Aqueous Tetramethylammonium Hydroxide Solution)

Each of the resin sheets according to Examples 1 and 2 was first cut out into a size of 30 mm × 100 mm, and dried at 120°C for 30 minutes. After that, the temperature was returned to room temperature in a desiccator, and the weight before immersing was measured. Then, the resultant was immersed in a 3.0% by weight aqueous tetramethylammonium hydroxide solution at 23°C for 5 minutes. The washing with ultrapure water for 3 minutes was performed twice at room temperature (23°C), and the resultant was dried at 120°C for 30 minutes. After that, the temperature was returned to room temperature in a desiccator, and the weight after immersing was measured.

The weight reduction ratio was obtained by the following formula. The result is shown in Table 1.

(Weight Reduction Ratio (% by weight [wt%])) = [1 - ((Weight After Immersing)/(Weight Before Immersing))] × 100

[0101]

(Measurement of Weight Reduction Ratio When Resin Sheet Immersed in SC-1)

Each of the resin sheets according to Examples 1 and 2 was first cut out into a size of 30 mm × 100 mm, and dried at 120°C for 30 minutes. After that, the temperature was cooled to room temperature in a desiccator, and the weight before immersing was measured. Then, the resultant was immersed in SC-1 (having a composition of ammonia water (15% by weight) : hydrogen peroxide : water = 1 : 2 : 5 by weight ratio) at 23°C for 100 seconds. The washing with ultrapure water for 3 minutes was performed twice at room temperature (23°C), and the resultant was dried at 120°C for 30 minutes. After that, the temperature was returned to room temperature in a desiccator, and the weight after immersing was measured.

The weight reduction ratio was obtained by the following formula. The result is shown in Table 1.

(Weight Reduction Ratio (% by weight [wt%])) = [1 - ((Weight After Immersing)/(Weight Before Immersing))] × 100

[0102]

(Measurement of Weight Reduction Ratio When Resin Sheet Immersed in SC-2)

Each of the resin sheets according to Examples 1 and 2 was first cut out into a size of 30 mm × 100 mm, and dried at 120°C for 30 minutes. After that, the temperature was returned to room temperature in a desiccator, and the weight before immersing was measured. Then, the resultant was immersed in SC-2 (having a composition of hydrochloric acid (38% by weight) :

hydrogen peroxide : water = 1 : 2 : 5 by weight ratio) at 23°C for 160 seconds. The washing with ultrapure water for 3 minutes was performed twice at room temperature (23°C), and the resultant was dried at 120°C for 30 minutes. After that, the temperature was returned to room temperature in a desiccator, and the weight after immersing was measured.

The weight reduction ratio was obtained by the following formula. The result is shown in Table 1.

(Weight Reduction Ratio (% by weight [wt%])) = [1 - ((Weight After Immersing)/(Weight Before Immersing))] × 100

[0103]

(Measurement of Weight Reduction Ratio When Resin Sheet Immersed in Hydrogen Peroxide Water)

Each of the resin sheets according to Examples 1 and 2 was first cut out into a size of 30 mm × 100 mm, and dried at 120°C for 30 minutes. After that, the temperature was returned to room temperature in a desiccator, and the weight before immersing was measured. Then, the resultant was immersed in 30% by weight hydrogen peroxide water at 23°C for 840 seconds. The washing with ultrapure water for 3 minutes was performed twice at room temperature (23°C), and the resultant was dried at 120°C for 30 minutes. After that, the temperature was returned to room temperature in a desiccator, and the weight after immersing was measured.

The weight reduction ratio was obtained by the following

formula. The result is shown in Table 1.

(Weight Reduction Ratio (% by weight [wt%])) = [1 - ((Weight After Immersing)/(Weight Before Immersing))] × 100

[0104]

(Measurement of Weight Reduction Ratio When Resin Sheet Immersed in Methyl Ethyl Ketone)

Each of the resin sheets according to Examples 1 and 2 was first cut out into a size of 30 mm × 100 mm, and dried at 120°C for 30 minutes. After that, the temperature was returned to room temperature in a desiccator, and the weight before immersing was measured. Then, the resultant was immersed in methyl ethyl ketone (MEK) at 23°C for 2400 seconds. The washing with ultrapure water for 3 minutes was performed twice at room temperature (23°C), and the resultant was dried at 120°C for 30 minutes. After that, the temperature was returned to room temperature in a desiccator, and the weight after immersing was measured.

The weight reduction ratio was obtained by the following formula. The result is shown in Table 1.

(Weight Reduction Ratio (% by weight [wt%])) = [1 - ((Weight After Immersing)/(Weight Before Immersing))] × 100

[0105]

(Measurement of Weight Reduction Ratio When Resin Sheet Immersed in Solution for Delipidization)

Each of the resin sheets according to Examples 1 and 2

was first cut out into a size of 30 mm × 100 mm, and dried at 120°C for 30 minutes. After that, the temperature was returned to room temperature in a desiccator, and the weight before immersing was measured. Then, the resultant was immersed in a solution for delipidization ("Rapid Clean P-1000" manufactured by Nikko Metal Plating Co., Ltd.) at 50°C for 300 seconds. The washing with ultrapure water for 3 minutes was performed twice at room temperature (23°C), and the resultant was dried at 120°C for 30 minutes. After that, the temperature was returned to room temperature in a desiccator, and the weight after immersing was measured.

The weight reduction ratio was obtained by the following formula. The result is shown in Table 1.

(Weight Reduction Ratio (% by weight [wt%])) = [1 - ((Weight After Immersing)/(Weight Before Immersing))] × 100

[0106]

(Measurement of Weight Reduction Ratio When Resin Sheet Immersed in Aqueous Nitric Acid Solution)

Each of the resin sheets according to Examples 1 and 2 was first cut out into a size of 30 mm × 100 mm, and dried at 120°C for 30 minutes. After that, the temperature was returned to room temperature in a desiccator, and the weight before immersing was measured. Then, the resultant was immersed in a 70% by weight aqueous nitric acid solution at 23°C for 30 seconds. The washing with ultrapure water for 3 minutes was performed

twice at room temperature (23°C), and the resultant was dried at 120°C for 30 minutes. After that, the temperature was returned to room temperature in a desiccator, and the weight after immersing was measured.

The weight reduction ratio was obtained by the following formula. The result is shown in Table 1.

(Weight Reduction Ratio (% by weight [wt%])) = [1 - ((Weight After Immersing)/(Weight Before Immersing))] × 100

[0107]

(Measurement of Weight Reduction Ratio When Resin Sheet Immersed in Plating Pretreatment Liquid)

Each of the resin sheets according to Examples 1 and 2 was first cut out into a size of 30 mm × 100 mm, and dried at 120°C for 30 minutes. After that, the temperature was returned to room temperature in a desiccator, and the weight before immersing was measured. Then, the resultant was immersed in a plating pretreatment liquid ("Super Zincate Process SZII" manufactured by Nikko Metal Plating Co., Ltd.) at 23°C for 30 seconds. The washing with ultrapure water for 3 minutes was performed twice at room temperature (23°C), and the resultant was dried at 120°C for 30 minutes. After that, the temperature was returned to room temperature in a desiccator, and the weight after immersing was measured.

The weight reduction ratio was obtained by the following formula. The result is shown in Table 1.

(Weight Reduction Ratio (% by weight [wt%])) = [1 - ((Weight After Immersing)/(Weight Before Immersing))] × 100

[0108]

(Measurement of Weight Reduction Ratio When Resin Sheet Immersed in Solution for Nickel Plating)

Each of the resin sheets according to Examples 1 and 2 was first cut out into a size of 30 mm × 100 mm, and dried at 120°C for 30 minutes. After that, the temperature was returned to room temperature in a desiccator, and the weight before immersing was measured. Then, the resultant was immersed in a solution for nickel plating (KG-535-0 : KG-535-1 = 3 : 1 manufactured by Nikko Metal Plating Co., Ltd.) at 80°C for 1800 seconds. The washing with ultrapure water for 3 minutes was performed twice at room temperature (23°C), and the resultant was dried at 120°C for 30 minutes. After that, the temperature was returned to room temperature in a desiccator, and the weight after immersing was measured.

The weight reduction ratio was obtained by the following formula. The result is shown in Table 1.

(Weight Reduction Ratio (% by weight [wt%])) = [1 - ((Weight After Immersing)/(Weight Before Immersing))] × 100

[0109]

(Measurement of Weight Reduction Ratio When Resin Sheet Immersed in Solution for Gold Plating)

Each of the resin sheets according to Examples 1 and 2

was first cut out into a size of 30 mm × 100 mm, and dried at 120°C for 30 minutes. After that, the temperature was returned to room temperature in a desiccator, and the weight before immersing was measured. Then, the resultant was immersed in a solution for gold plating ("CF-500SS" manufactured by Nikko Metal Plating Co., Ltd.) at 75°C for 1200 seconds. The washing with ultrapure water for 3 minutes was performed twice at room temperature (23°C), and the resultant was dried at 120°C for 30 minutes. After that, the temperature was returned to room temperature in a desiccator, and the weight after immersing was measured.

The weight reduction ratio was obtained by the following formula. The result is shown in Table 1.

(Weight Reduction Ratio (% by weight [wt%])) = [1 - ((Weight After Immersing)/(Weight Before Immersing))] × 100

[0110]

[Table 1]

	Weight Reduction Ratio (% by weight)	
Solution	Example 1	Example 2
HF	0.00	0.00
TMAH	0.00	0.00
SC-1	0.00	0.00
SC-2	0.00	0.00
Hydrogen Peroxide Water	0.03	0.01
MEK	0.10	0.05
Solution for Delipidization	0.10	0.09
Aqueous Nitric Acid Solution	0.14	0.04
Plating Pretreatment Liquid	0.00	0.01
Solution for Nickel Plating	0.04	0.02
Solution for Gold Plating	0.03	0.06

[0111]

(Measurement of Glass Transition Temperature (Tg) of Resin Sheet)

Measurement of the tensile storage modulus was performed using a solid viscoelasticity measuring apparatus ("RSA-III" manufactured by Rheometric Scientific, Inc.). Specifically, the resin sheet was heated at 180°C for 1 hour to be thermally cured, and a measurement sample having a size of 400 mm long × 10 mm wide × 200 μm thick was obtained from the cured resin sheet. Then, the measurement sample was set in a tool for film

tensile measurement, the tensile storage modulus and the loss modulus at a temperature range of -50°C to 300°C were measured under conditions of a frequency of 1 Hz and a temperature rising rate of 10°C/min, and a value of tanδ (G'' (loss modulus)/G' (storage modulus)) was calculated to obtain the glass transition temperature (Tg). As a result, the glass transition temperature of the resin sheet of Example 1 was 105°C. In addition, the glass transition temperature of the resin sheet of Example 2 was 110°C.

What is claimed is:

1. A resin sheet for forming a wiring circuit board that is connectable to an electrode formed on a semiconductor chip, wherein

the weight reduction ratio after the resin sheet is thermally cured at 180°C for 1 hour and then immersed in methyl ethyl ketone at 20°C or more and 25°C or less for 2400 seconds is 1.0% by weight or less.

2. The resin sheet according to claim 1, wherein the weight reduction ratio after the resin sheet is thermally cured at 180°C for 1 hour and then immersed in 0.5% by weight hydrofluoric acid at 20°C or more and 25°C or less for 60 seconds is 1.0% by weight or less.

3. The resin sheet according to claim 1 or 2, wherein the weight reduction ratio after the resin sheet is thermally cured at 180°C for 1 hour and then immersed in a 3.0% by weight aqueous tetramethylammonium hydroxide solution at 20°C or more and 25°C or less for 240 seconds is 1.0% by weight or less.