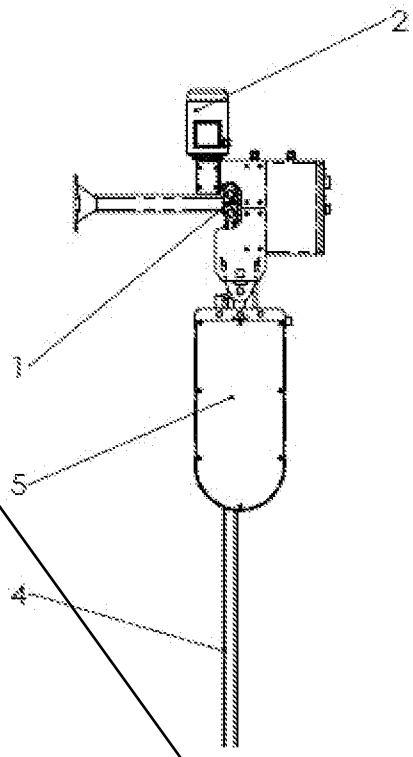

Figure 5

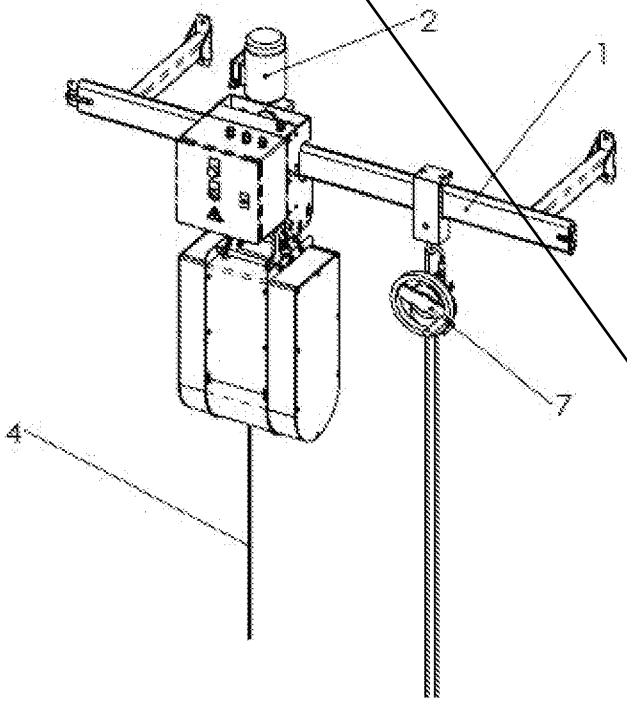

Figure 6

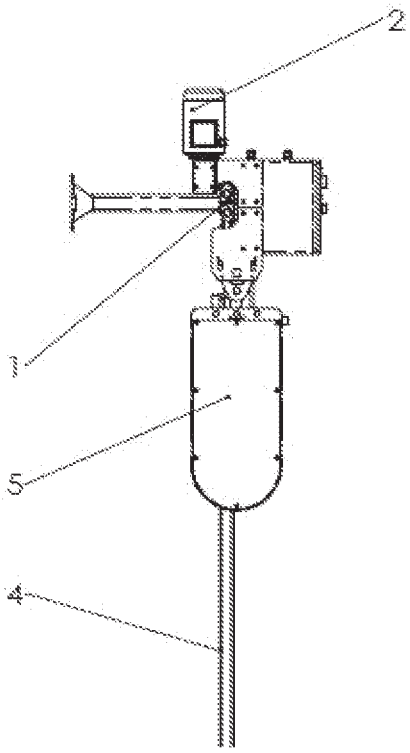

Figure 5