FIG. 1

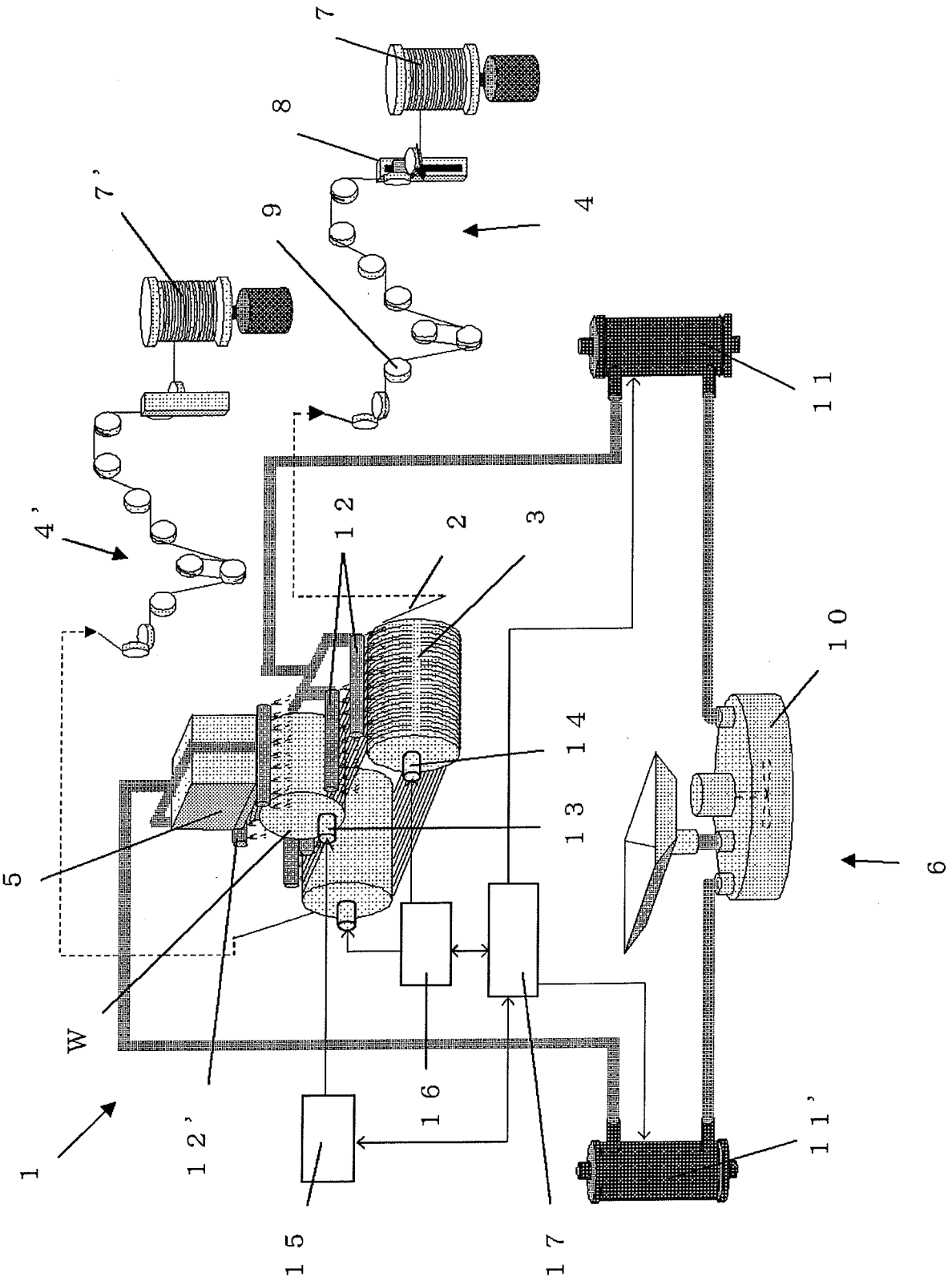

FIG. 2

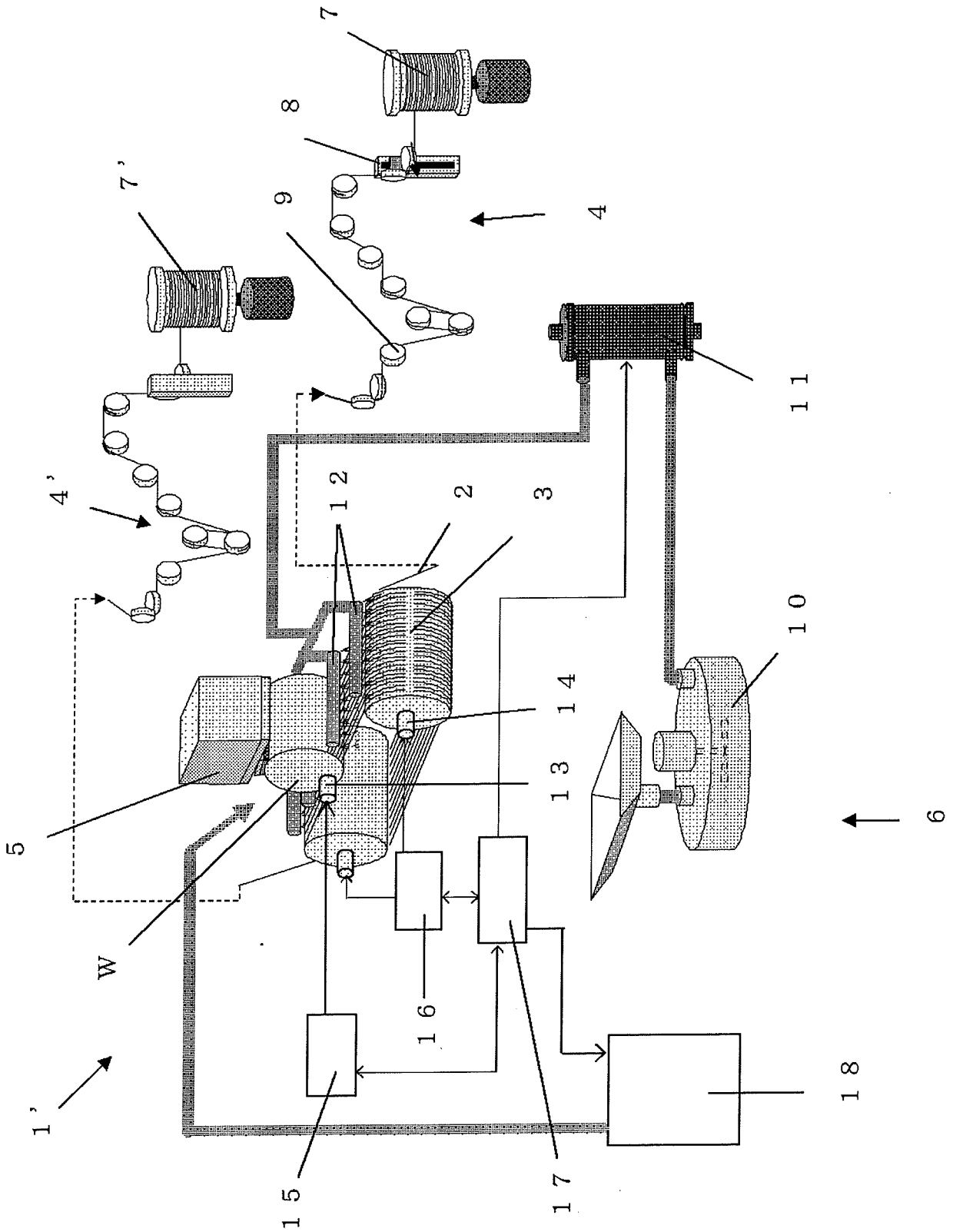

FIG. 3

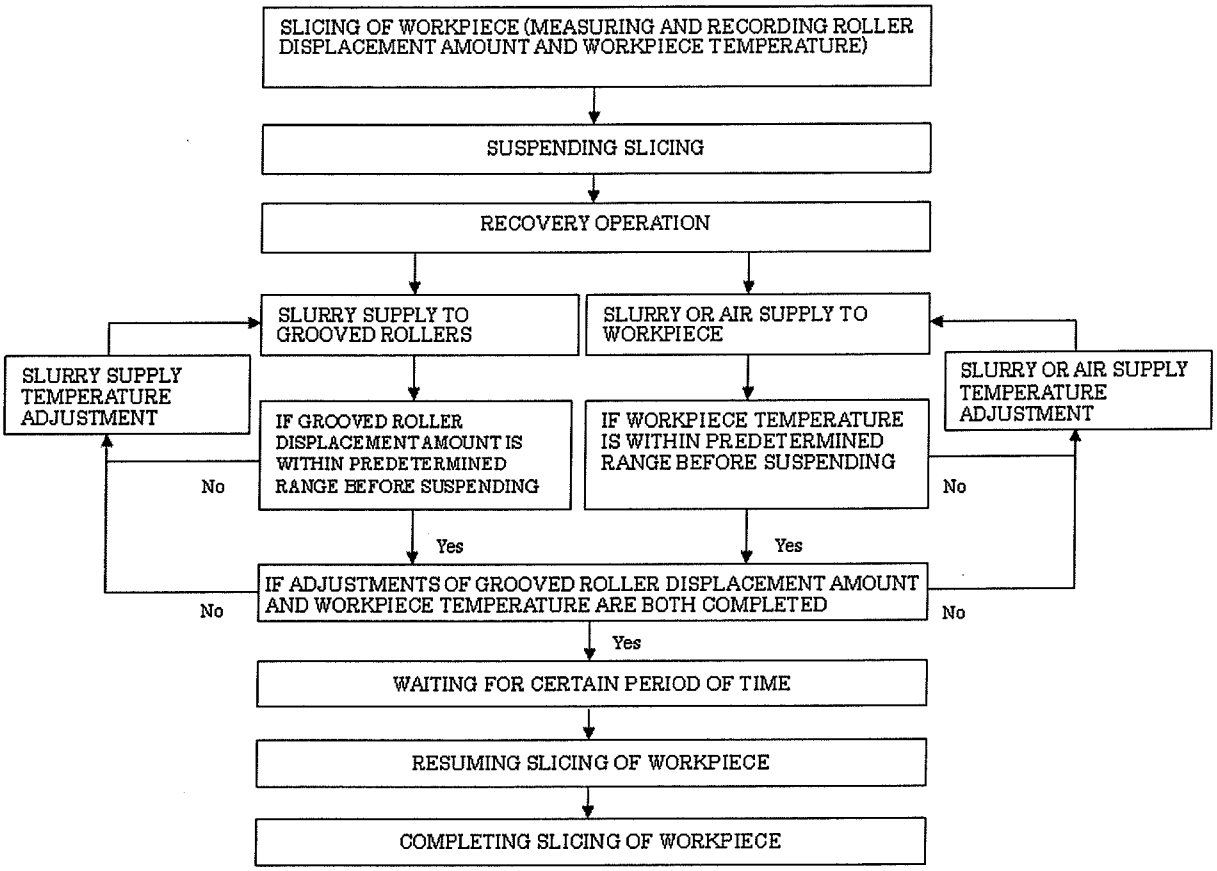
SLICING OF WORKPIECE (MEASURING AND RECORDING ROLLER DISPLACEMENT AMOUNT AND WORKPIECE TEMPERATURE)
SUSPENDING SLICING
RECOVERY OPERATION
SLURRY SUPPLY TO GROOVED ROLLERS
SLURRY OR AIR SUPPLY TO WORKPIECE
SLURRY SUPPLY TEMPERATURE ADJUSTMENT
SLURRY OR AIR SUPPLY TEMPERATURE ADJUSTMENT
IF GROOVED ROLLER DISPLACEMENT AMOUNT IS WITHIN PREDETERMINED RANGE BEFORE SUSPENDING
IF WORKPIECE TEMPERATURE IS WITHIN PREDETERMINED RANGE BEFORE SUSPENDING
No
No
Yes
Yes
IF ADJUSTMENTS OF GROOVED ROLLER DISPLACEMENT AMOUNT AND WORKPIECE TEMPERATURE ARE BOTH COMPLETED
No
No
Yes
WAITING FOR CERTAIN PERIOD OF TIME
RESUMING SLICING OF WORKPIECE
COMPLETING SLICING OF WORKPIECE

FIG. 4

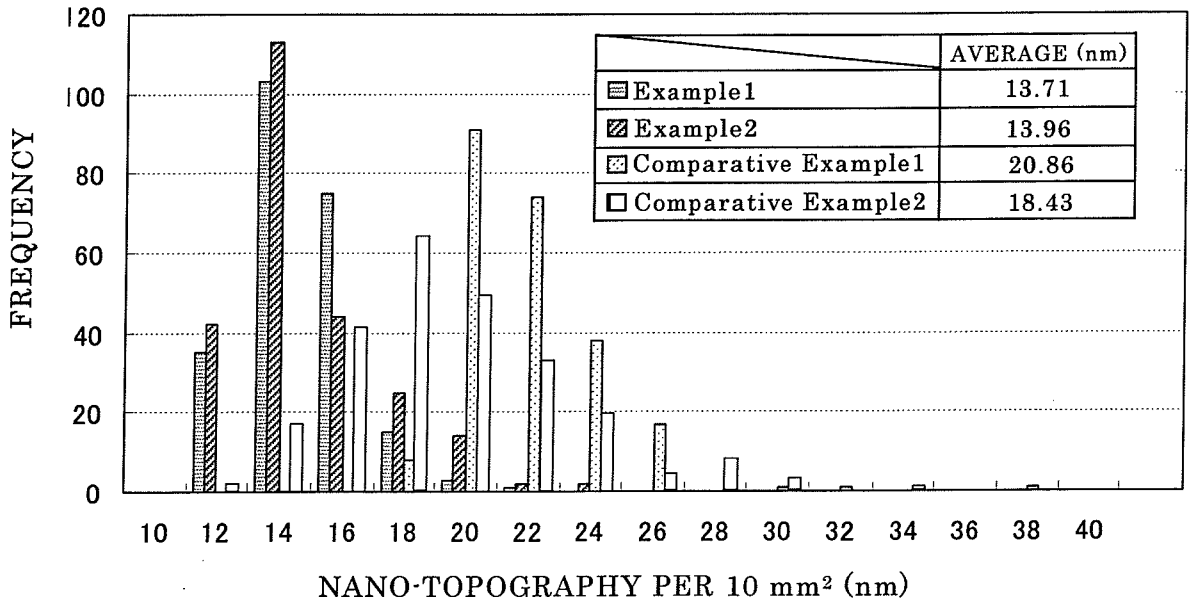
FREQUENCY
120
100
80
60
40
20
0
10 12 14 16 18 20 22 24 26 28 30 32 34 36 38 40
NANO-TOPOGRAPHY PER 10 mm² (nm)
AVERAGE (nm)
Example1 13.71
Example2 13.96
Comparative Example1 20.86
Comparative Example2 18.43

FIG. 5

