(12) INTERNATIONAL APPLICATION PUBLISHED UNDER THE PATENT COOPERATION TREATY (PCT)

(19) World Intellectual Property Organization
International Bureau

(43) International Publication Date
22 December 2005 (22.12.2005)

PCT

(10) International Publication Number
WO 2005/121452 A3

(51) International Patent Classification[7]: E01B 9/54, 9/58

(21) International Application Number:
PCT/GB2005/002316

(22) International Filing Date: 10 June 2005 (10.06.2005)

(25) Filing Language: English

(26) Publication Language: English

(30) Priority Data:
0413093.6 11 June 2004 (11.06.2004) GB

(71) Applicants *(for all designated States except US)*: **PANDROL LIMITED** [GB/GB]; 63 Station Road, Addlestone, Surrey KT15 2AR (GB). **VAE EISENBAHNSYSTEME GMBH** [AT/AT]; Alpinestrasse 1, A-8740 Zeltweg (AT). **VAE GMBH** [AT/AT]; Rotenturmstrasse 5-9, A-1010 Wien (AT). **BWG GMBH & CO. KG** [DE/DE]; Wetzlarer Strasse 101, 35510 Butzbach (DE).

(72) Inventors; and

(75) Inventors/Applicants *(for US only)*: **PORRILL, John, Phillip** [GB/GB]; 18 Minster road, Godalming, Surrey GU7 1SP (GB). **SEELEY, David, Ronald** [GB/GB]; 46 St. Leonards Road, Bengeo, Hertford SG14 3JW (GB). **OSSBERGER, Heinz** [AT/AT]; Mursiedlung 31, A-8734 Grosslobming (AT). **LEITNER, Josef** [AT/AT]; Farch 79, A-8741 Weisskirchen (AT). **DIETZE, Hans-Ulrich** [DE/DE]; Am Mueggenbusch 13, 14789 Wusterwitz (DE). **HÖHNE, Hubertus** [DE/DE]; Ebersgönser Weg 47, 35510 Butsbach (DE).

(74) Agent: **FENLON, Christine, Lesley**; Haseltine Lake, 5th Floor, Imperial House, 15-19 Kingsway, London WC2B 6UD (GB).

(81) Designated States *(unless otherwise indicated, for every kind of national protection available)*: AE, AG, AL, AM, AT, AU, AZ, BA, BB, BG, BR, BW, BY, BZ, CA, CH, CN, CO, CR, CU, CZ, DE, DK, DM, DZ, EC, EE, EG, ES, FI, GB, GD, GE, GH, GM, HR, HU, ID, IL, IN, IS, JP, KE, KG, KM, KP, KR, KZ, LC, LK, LR, LS, LT, LU, LV, MA, MD, MG, MK, MN, MW, MX, MZ, NA, NG, NI, NO, NZ, OM, PG, PH, PL, PT, RO, RU, SC, SD, SE, SG, SK, SL, SM, SY, TJ, TM, TN, TR, TT, TZ, UA, UG, US, UZ, VC, VN, YU, ZA, ZM, ZW.

(84) Designated States *(unless otherwise indicated, for every kind of regional protection available)*: ARIPO (BW, GH, GM, KE, LS, MW, MZ, NA, SD, SL, SZ, TZ, UG, ZM, ZW), Eurasian (AM, AZ, BY, KG, KZ, MD, RU, TJ, TM), European (AT, BE, BG, CH, CY, CZ, DE, DK, EE, ES, FI, FR, GB, GR, HU, IE, IS, IT, LT, LU, MC, NL, PL, PT, RO, SE, SI, SK, TR), OAPI (BF, BJ, CF, CG, CI, CM, GA, GN, GQ, GW, ML, MR, NE, SN, TD, TG).

[Continued on next page]

(54) Title: FASTENING RAIL IN RAILWAY SLIDE CHAIR ASSEMBLY

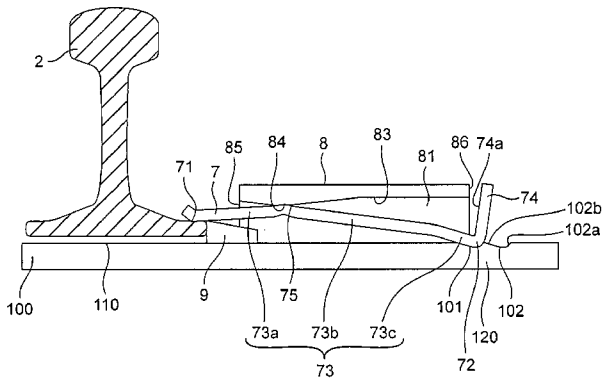

(57) Abstract: A rail fastening apparatus for fastening an inner stock rail (2) in a railway slide chair assembly comprises a baseplate (100) having on one face thereof a rail seat region (110) on which the inner stock rail (2) sits when the slide chair assembly is in use, a resilient rail fastening clip (7) for restraining such an inner stock rail (2), the clip (7) comprising an elongate member having at one end a toe portion (71) for bearing on the rail (2) and at its other end a heel portion (72), first locating means (101) for locating the rail fastening clip (7) in the apparatus in a first position, which means (101) comprise a first abutment surface (101a), positioned on the baseplate (100) in a second region (120) spaced from the rail seat region (110), against which surface the heel portion (72) of the clip (7) abuts when the apparatus is in use to inhibit withdrawal of the clip (7) from the rail (2), and loading means (9) for vertically deflecting the clip (7) so as to produce a load in the toe portion (71). The loading means (9) comprise a ramp (9) provided adjacent to the rail seat region (110), whereby the clip (7) can be installed in the apparatus by hammer-driving the heel portion (72) of 25 the clip (7) towards the rail seat region (110) until the toe portion (71) slides up the ramp (9) onto the rail (2) and the heel portion (72) comes into contact with the first abutment surface (101a). Second locating means (102) are provided for locating the rail fastening clip (7) in the apparatus in a second position, different from the first, into which the clip can be driven such that the toe portion of the clip sits on the ramp (9) in a pre-load condition in which the clip does not bear on the rail.

WO 2005/121452 A3

Published:
— *with international search report*

(88) Date of publication of the international search report:
20 April 2006

For two-letter codes and other abbreviations, refer to the "Guidance Notes on Codes and Abbreviations" appearing at the beginning of each regular issue of the PCT Gazette.