Drawings

Fig. 1

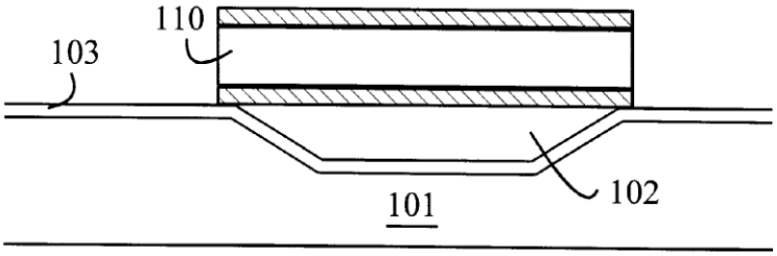

Fig. 2

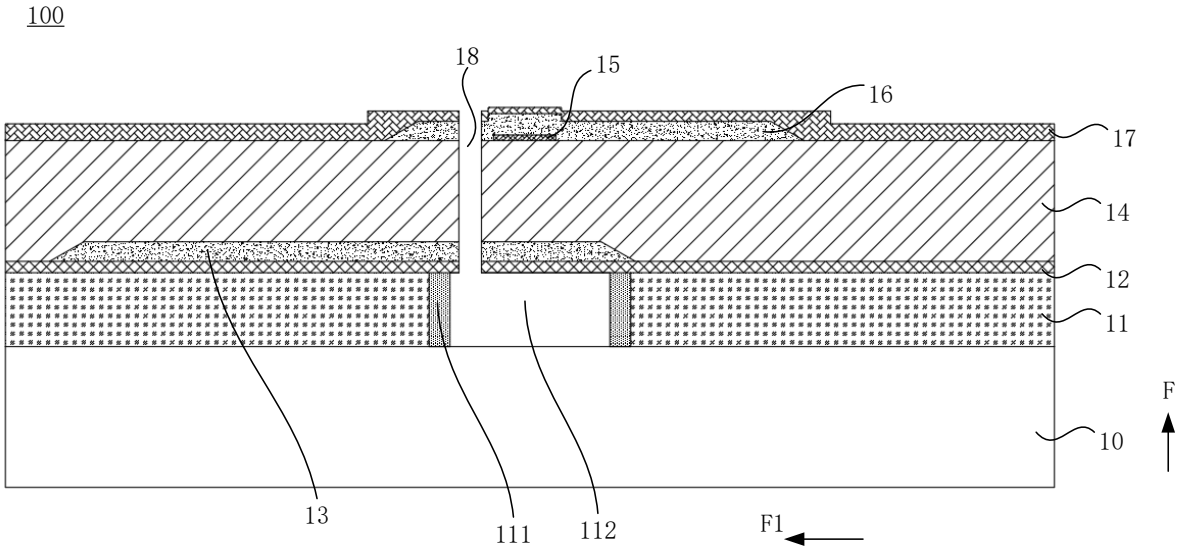

Fig. 3

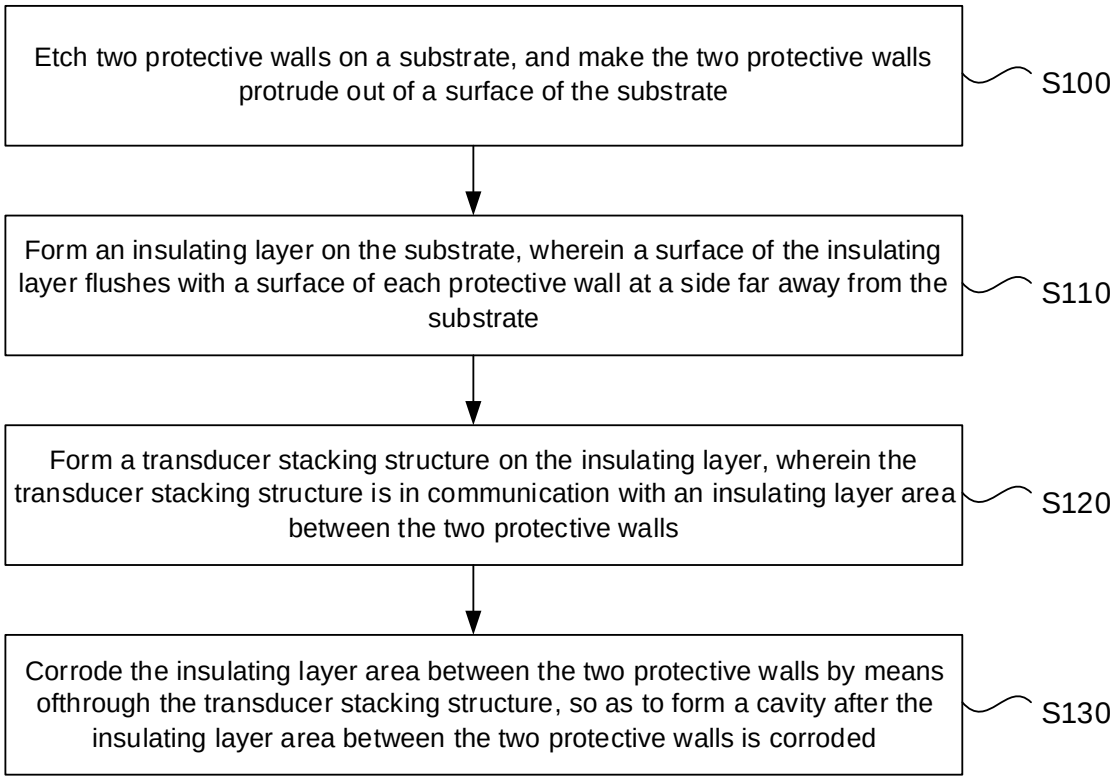
Etch two protective walls on a substrate, and make the two protective walls protrude out of a surface of the substrate
S100
Form an insulating layer on the substrate, wherein a surface of the insulating layer flushes with a surface of each protective wall at a side far away from the substrate
S110
Form a transducer stacking structure on the insulating layer, wherein the transducer stacking structure is in communication with an insulating layer area between the two protective walls
S120
Corrode the insulating layer area between the two protective walls by means ofthrough the transducer stacking structure, so as to form a cavity after the insulating layer area between the two protective walls is corroded
S130

Fig. 4

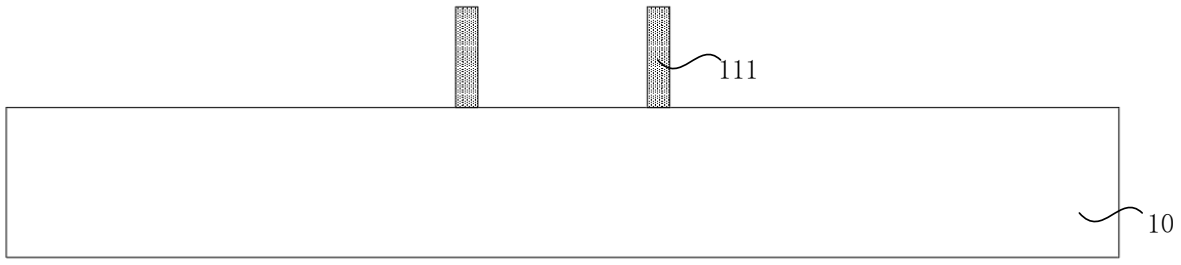
111
10

Fig.5

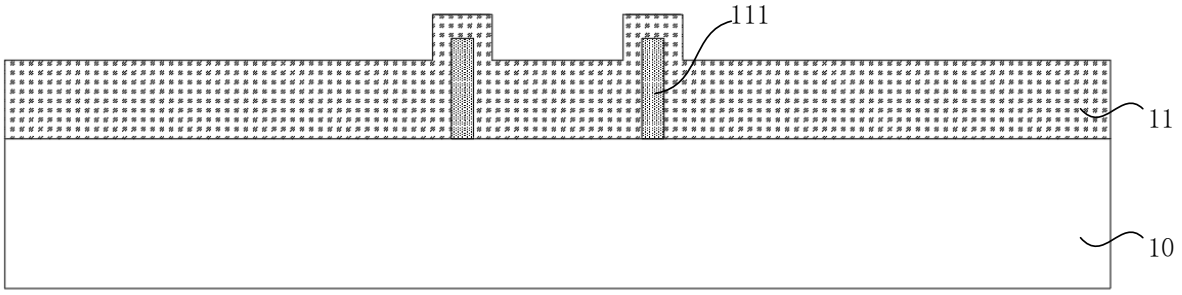

Fig.6

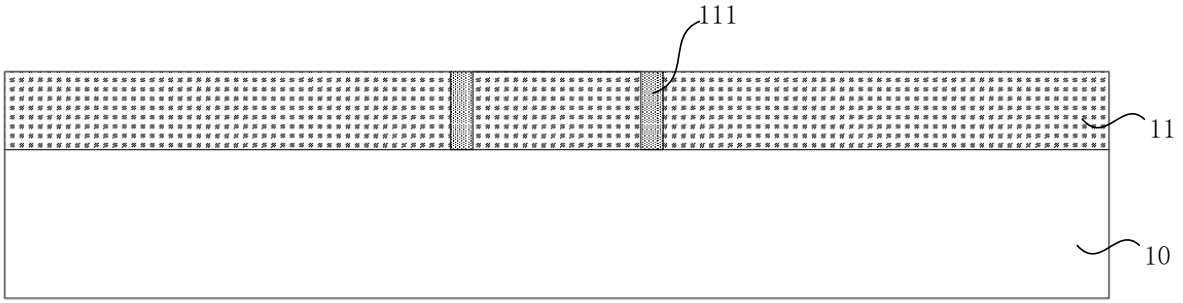

Fig.7

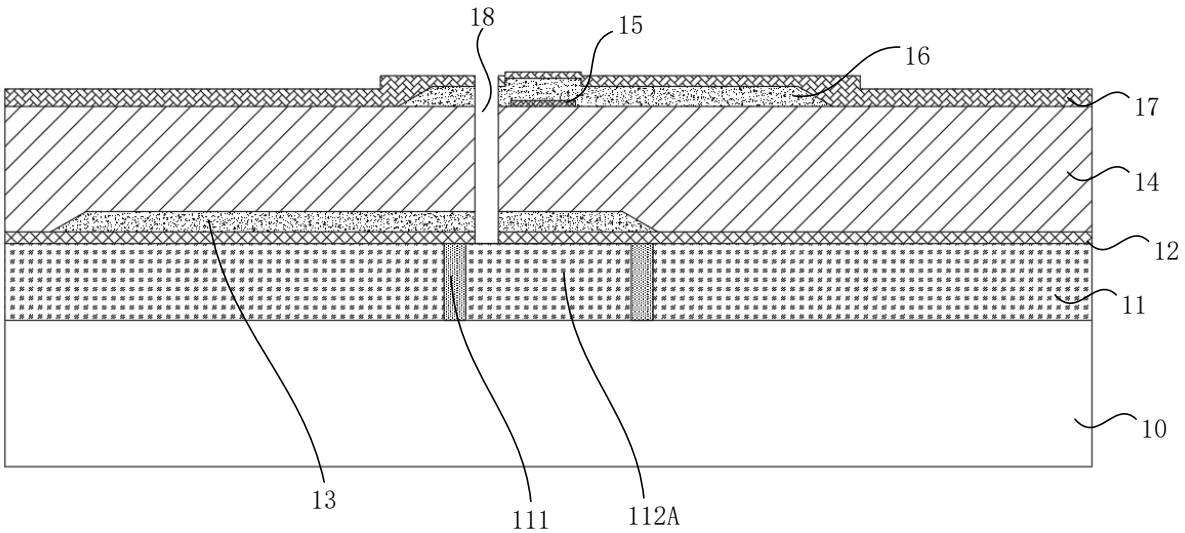

Fig.8

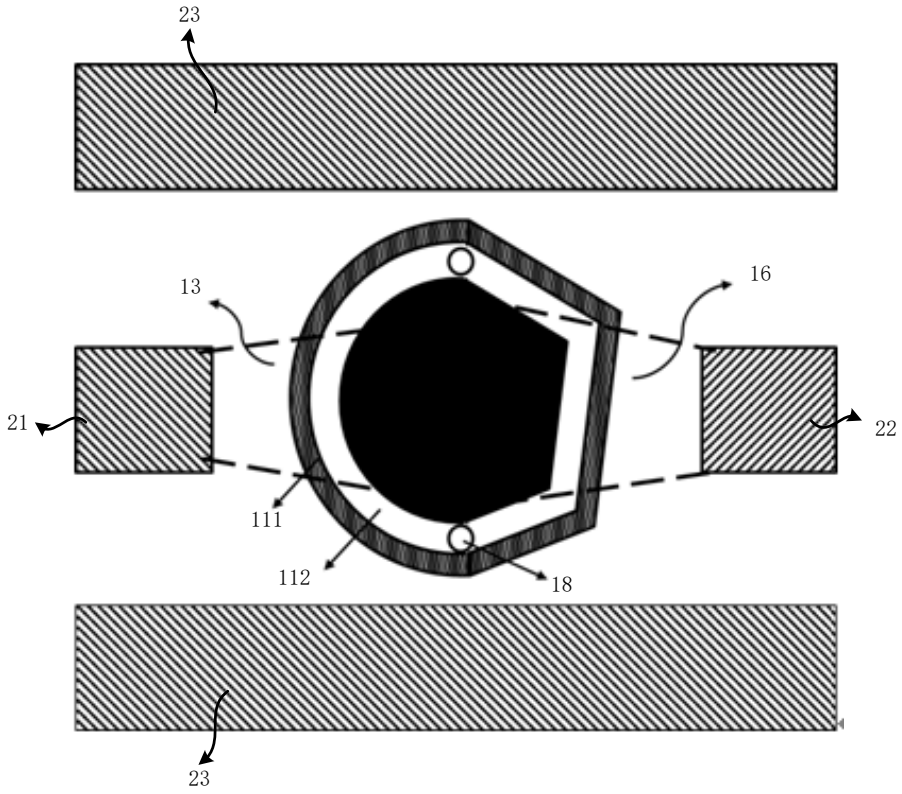
23
13
16
21
22
111
112
18
23

Fig.9

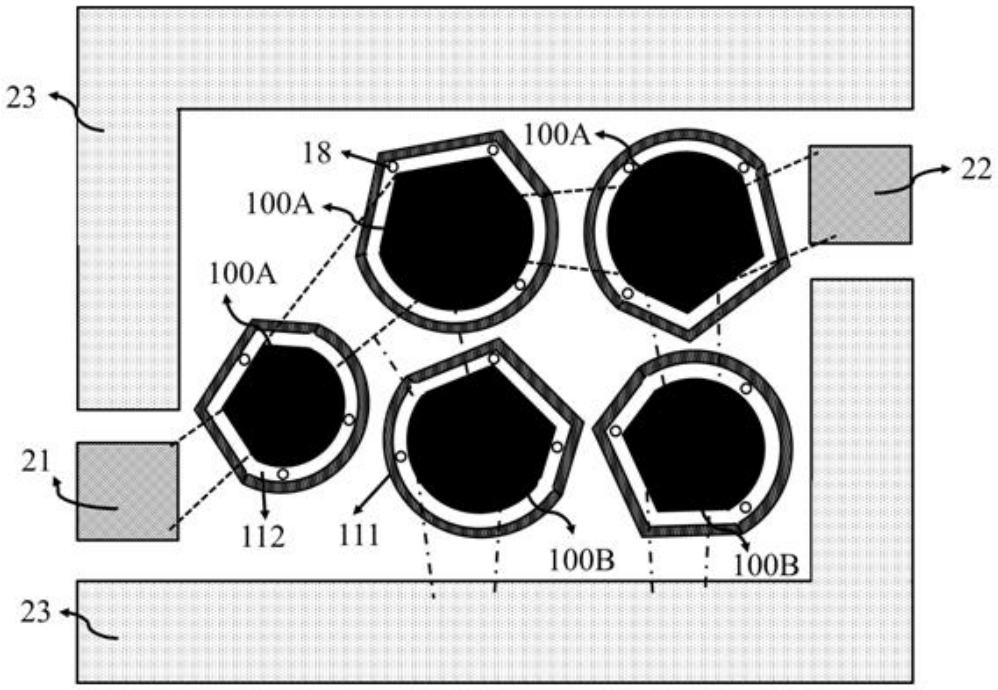
23
18
100A
22
100A
100A
21
112
111
100B
100B
23