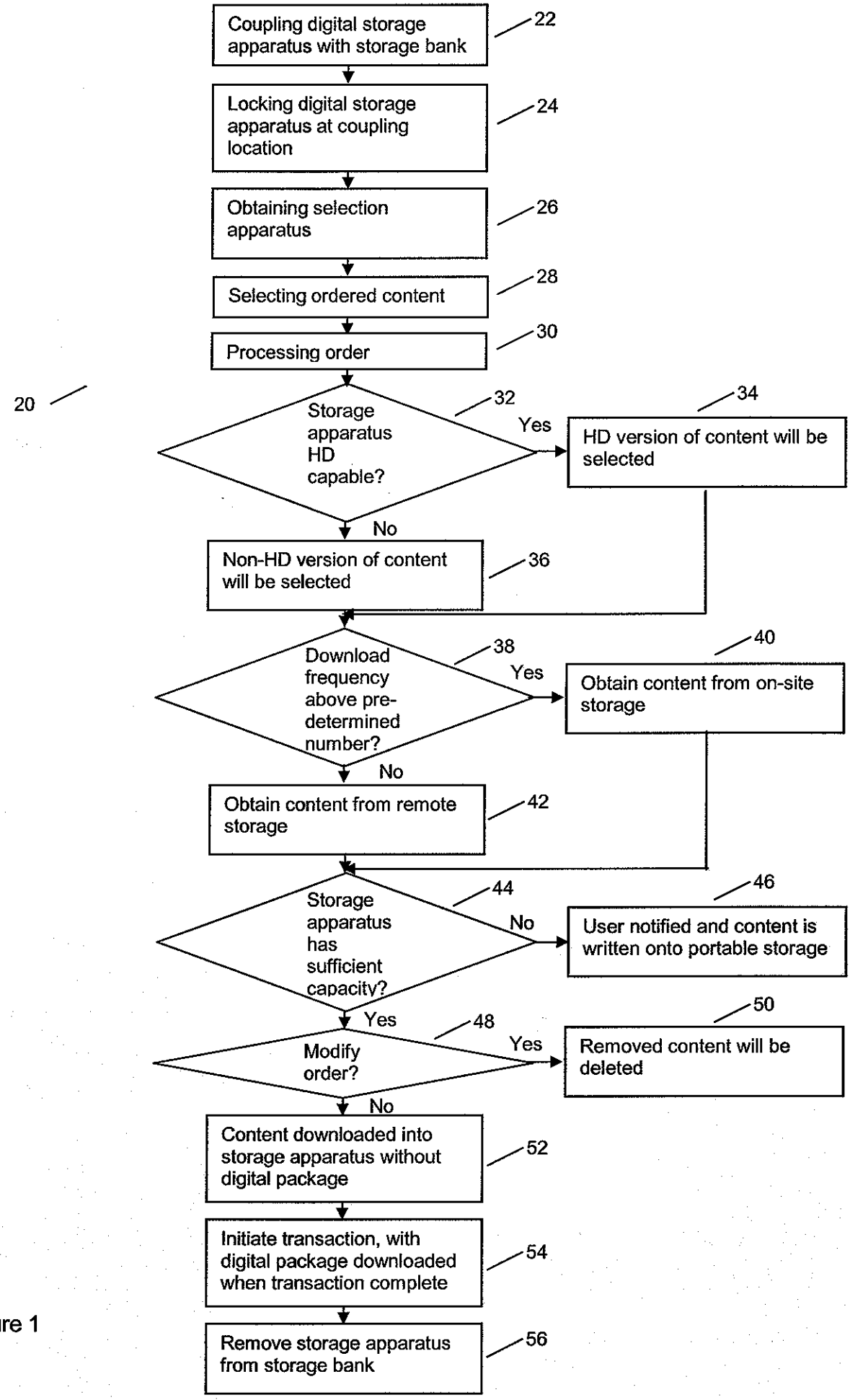
20
Coupling digital storage apparatus with storage bank
22
Locking digital storage apparatus at coupling location
24
Obtaining selection apparatus
26
Selecting ordered content
28
Processing order
30
Storage apparatus HD capable?
32
Yes
HD version of content will be selected
34
No
Non-HD version of content will be selected
36
Download frequency above pre-determined number?
38
Yes
Obtain content from on-site storage
40
No
Obtain content from remote storage
42
Storage apparatus has sufficient capacity?
44
No
User notified and content is written onto portable storage
46
Yes
Modify order?
48
Yes
Removed content will be deleted
50
No
Content downloaded into storage apparatus without digital package
52
Initiate transaction, with digital package downloaded when transaction complete
54
Remove storage apparatus from storage bank
56

Figure 1

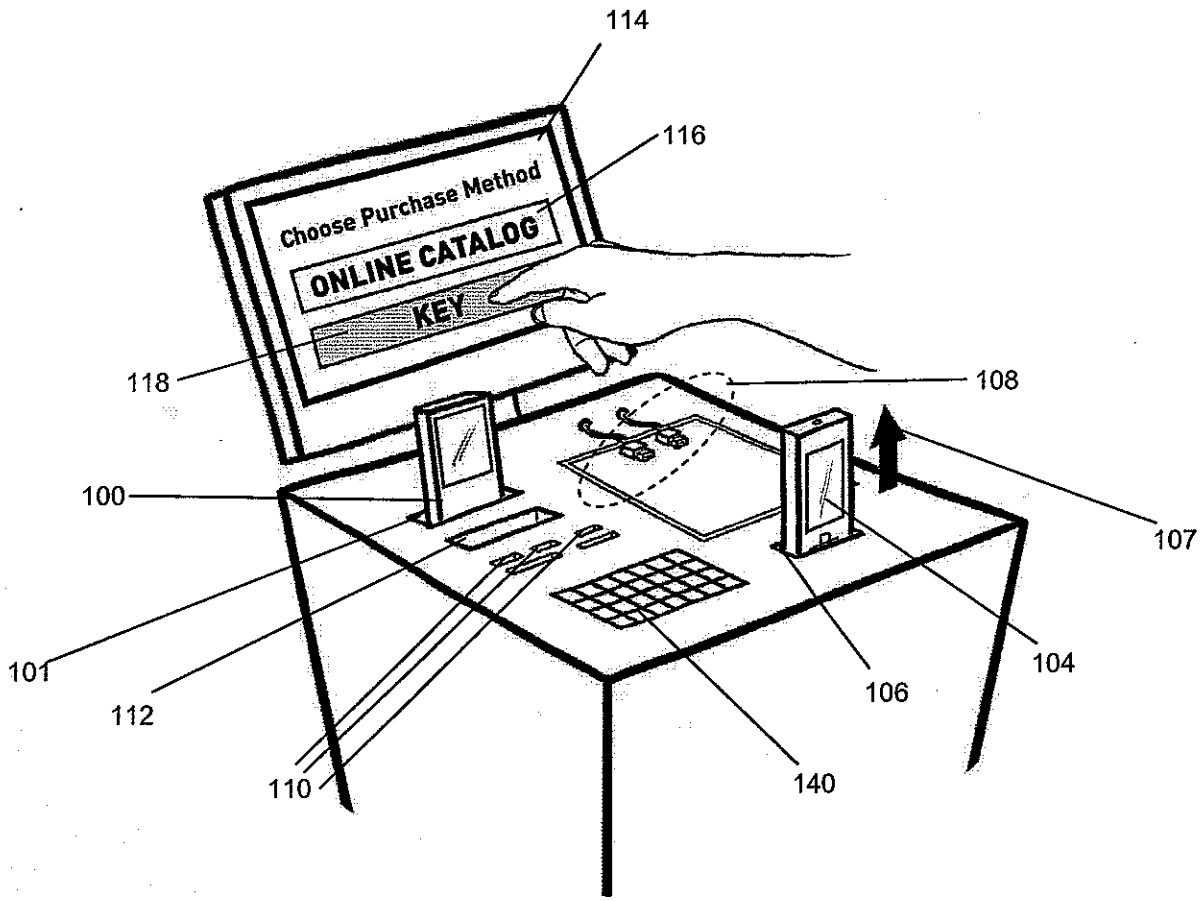

Figure 2A

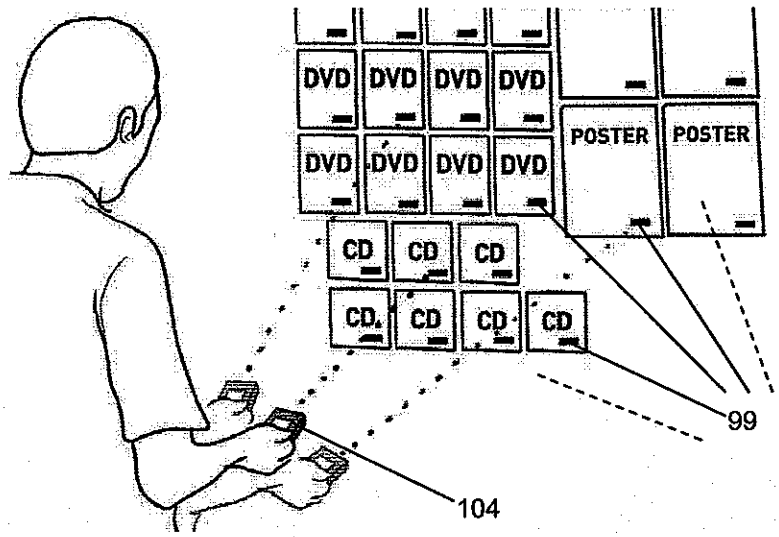

Figure 2B

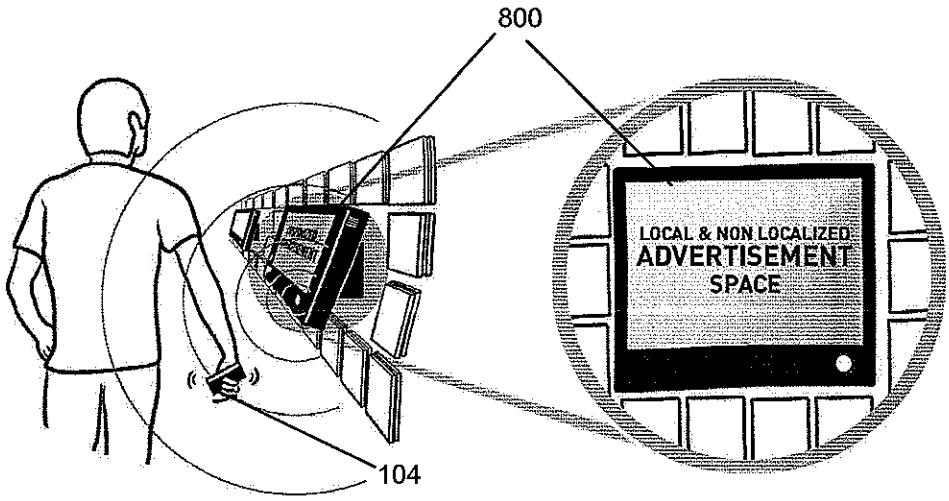

Figure 2C



Figure 2D

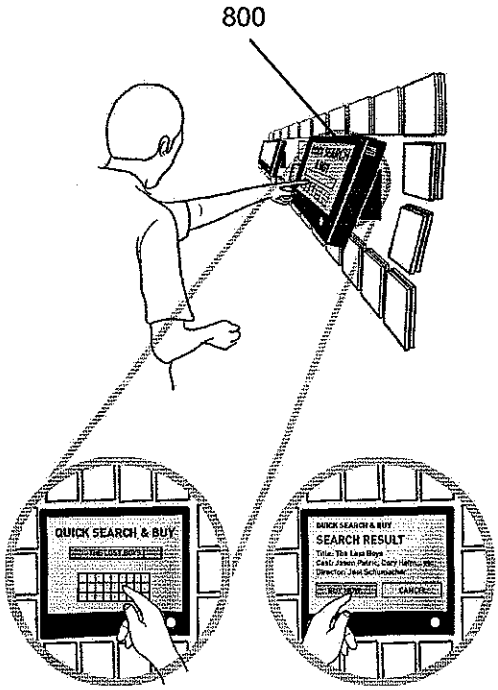

Figure 2E

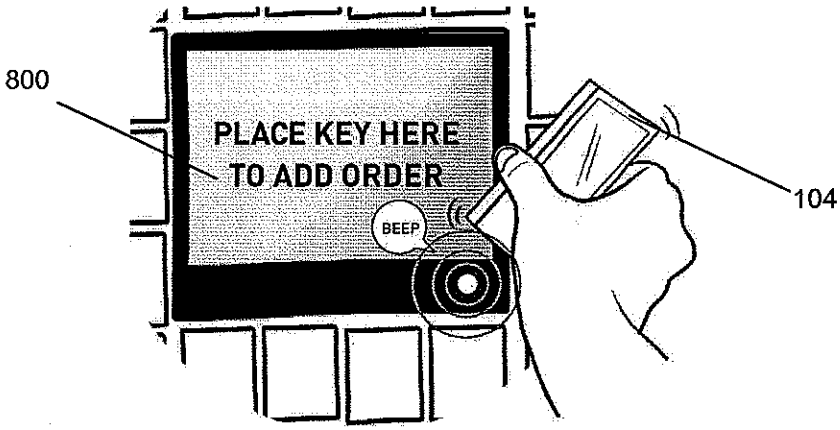

Figure 2F

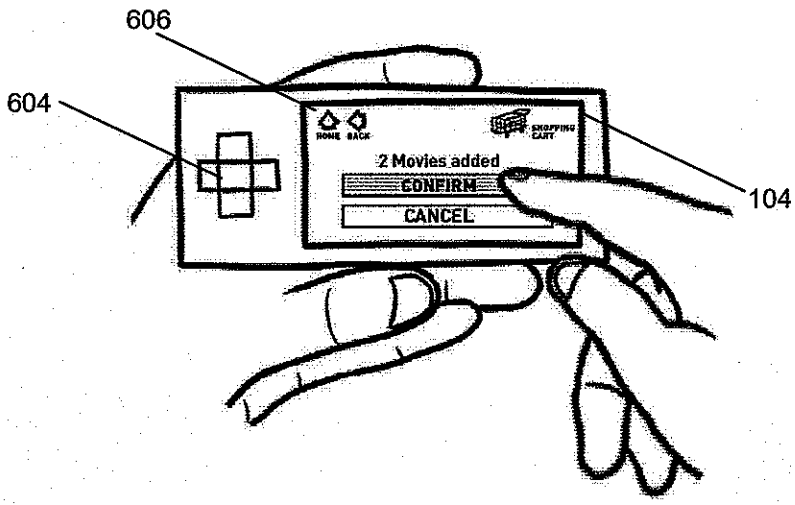

Figure 2G

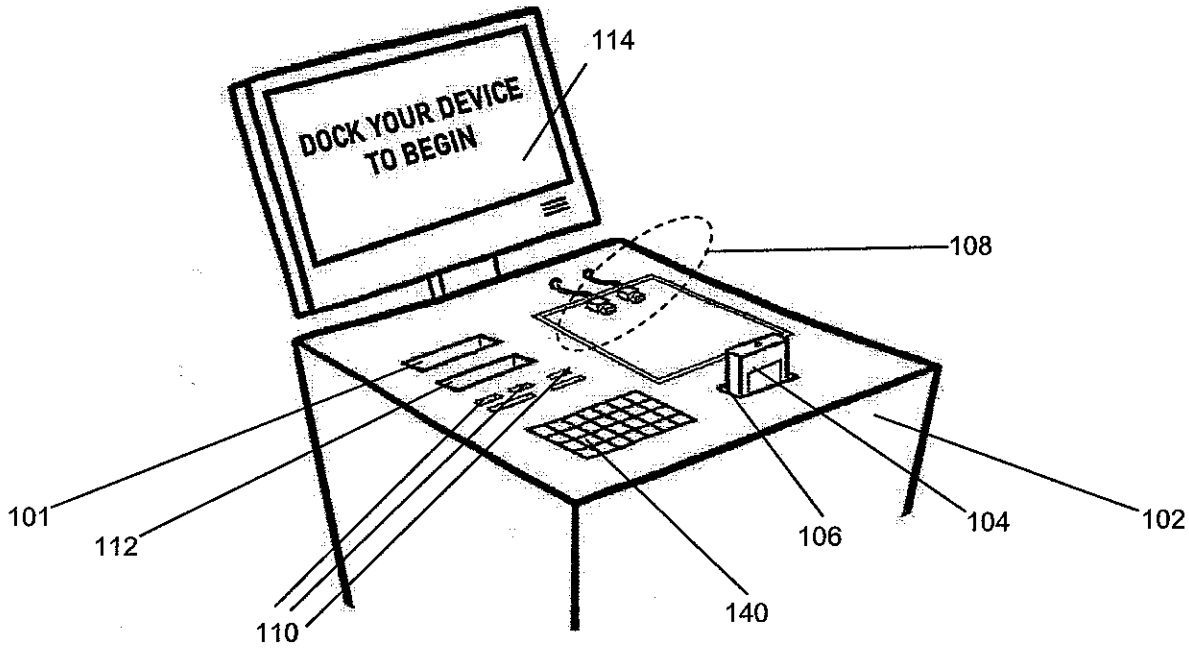

Figure 3

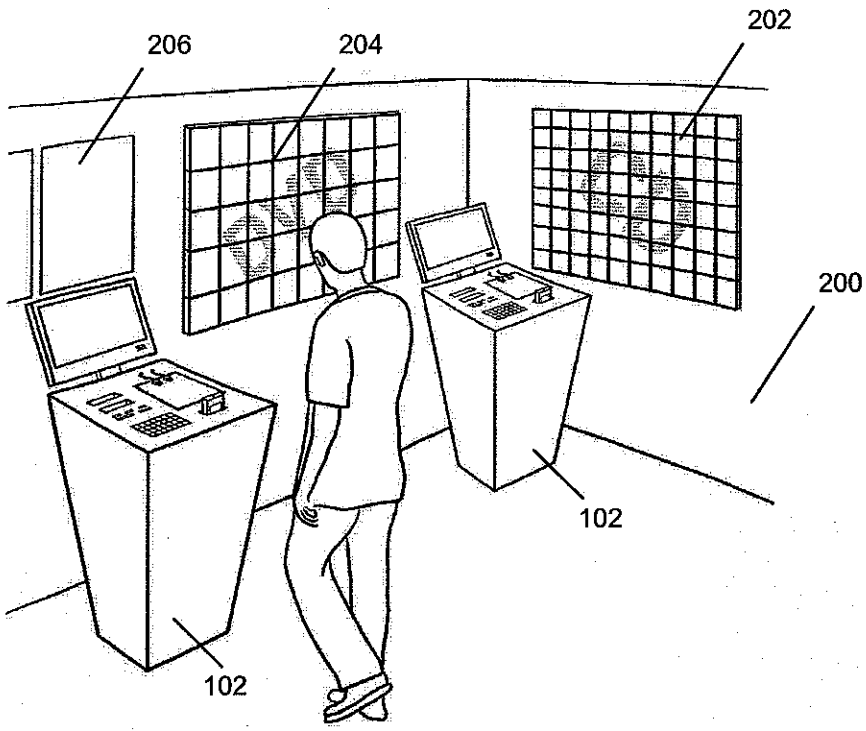

Figure 4

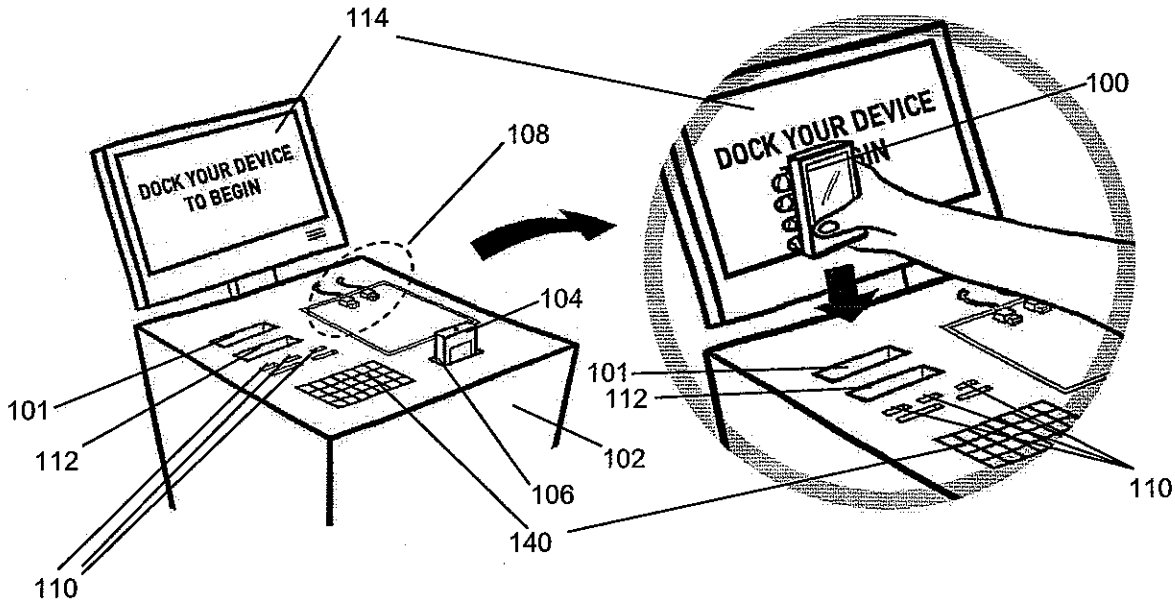

Figure 5A

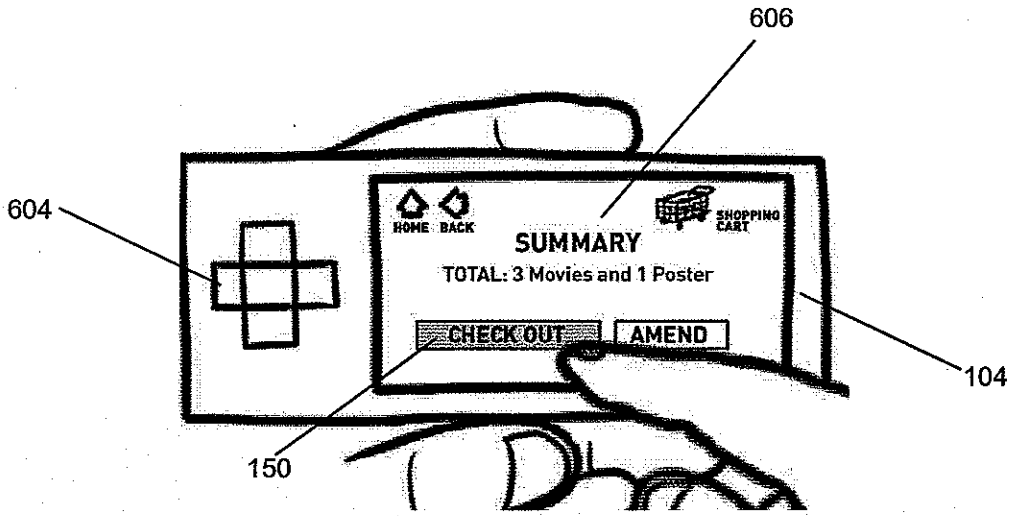

Figure 5B

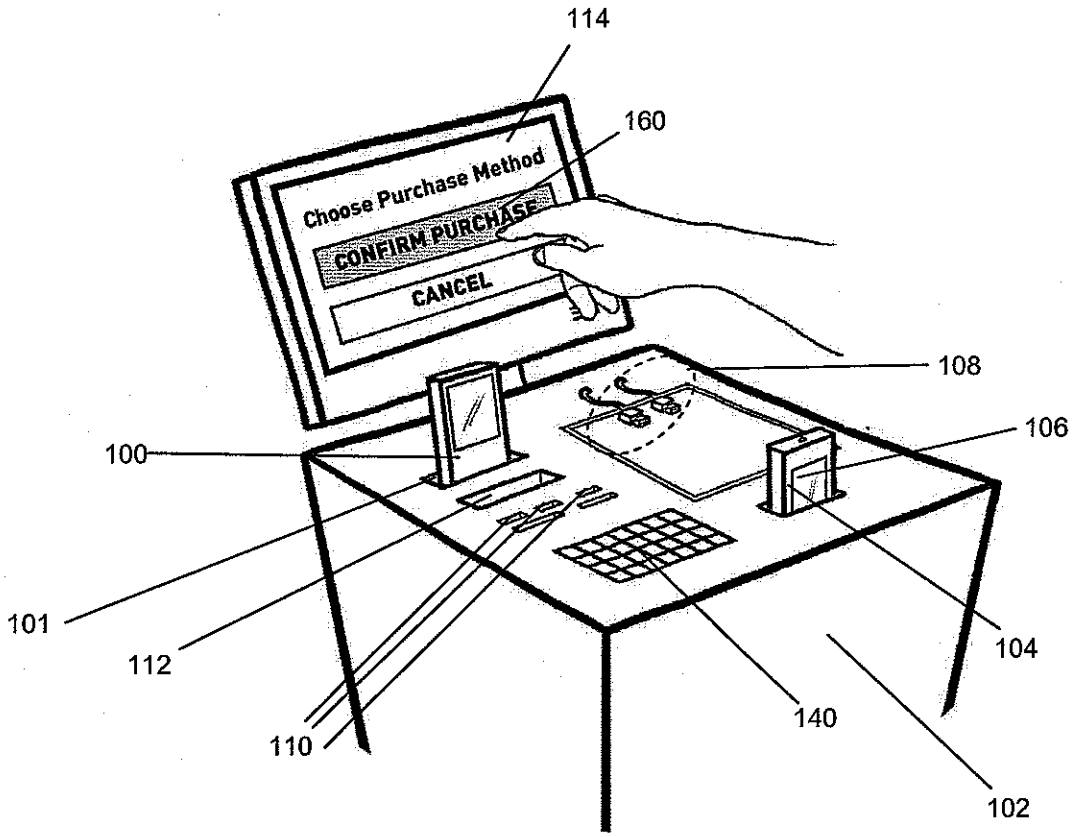

Figure 5C

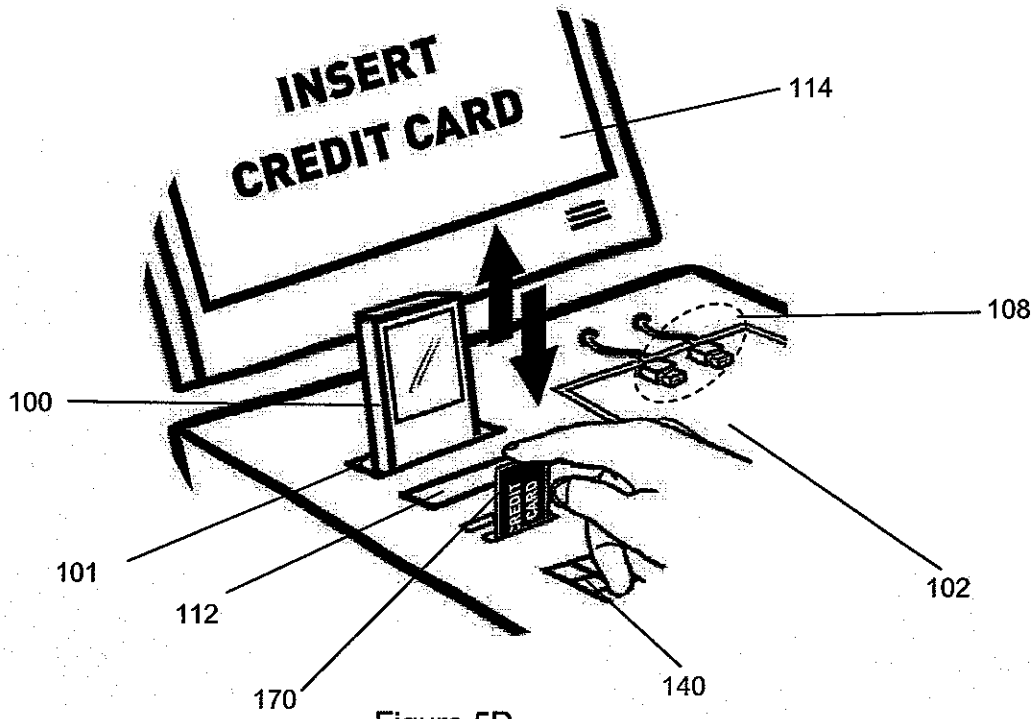

Figure 5D

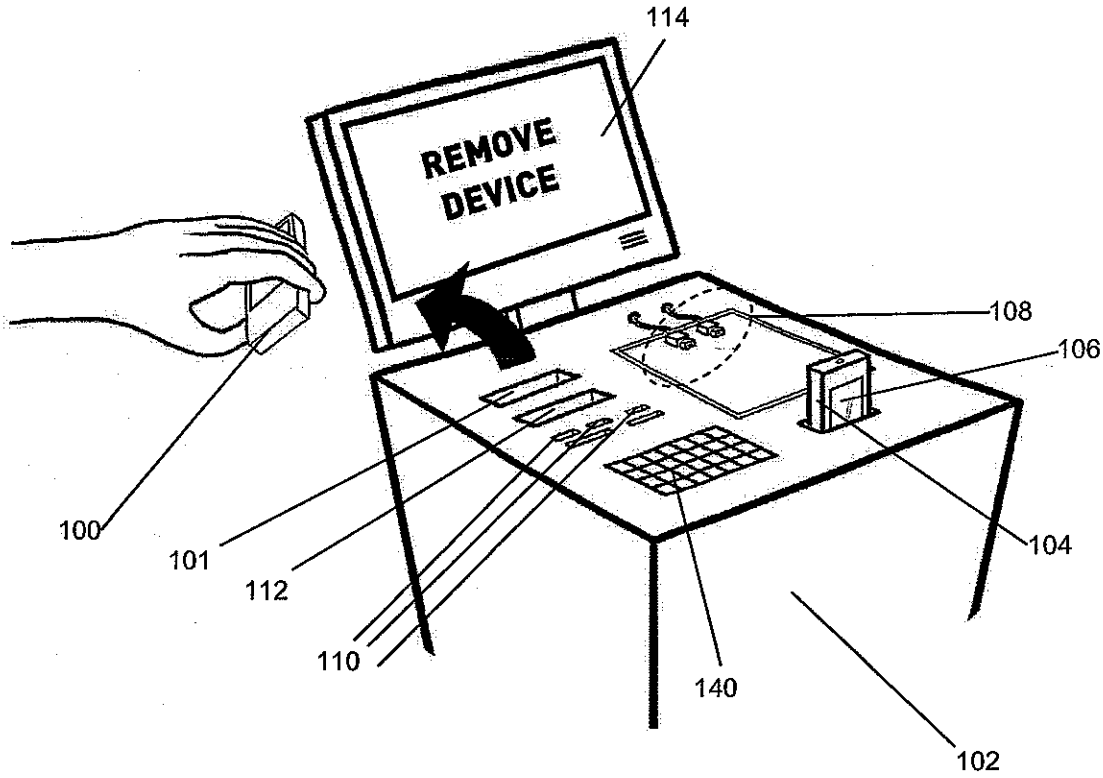

Figure 5E

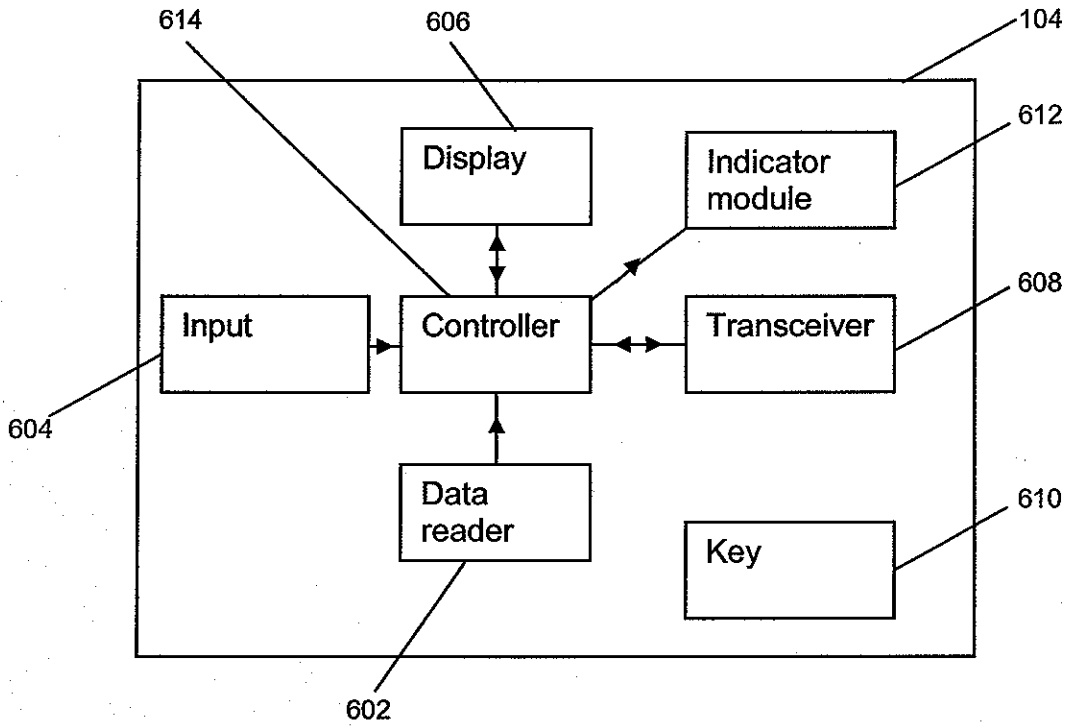

Figure 6

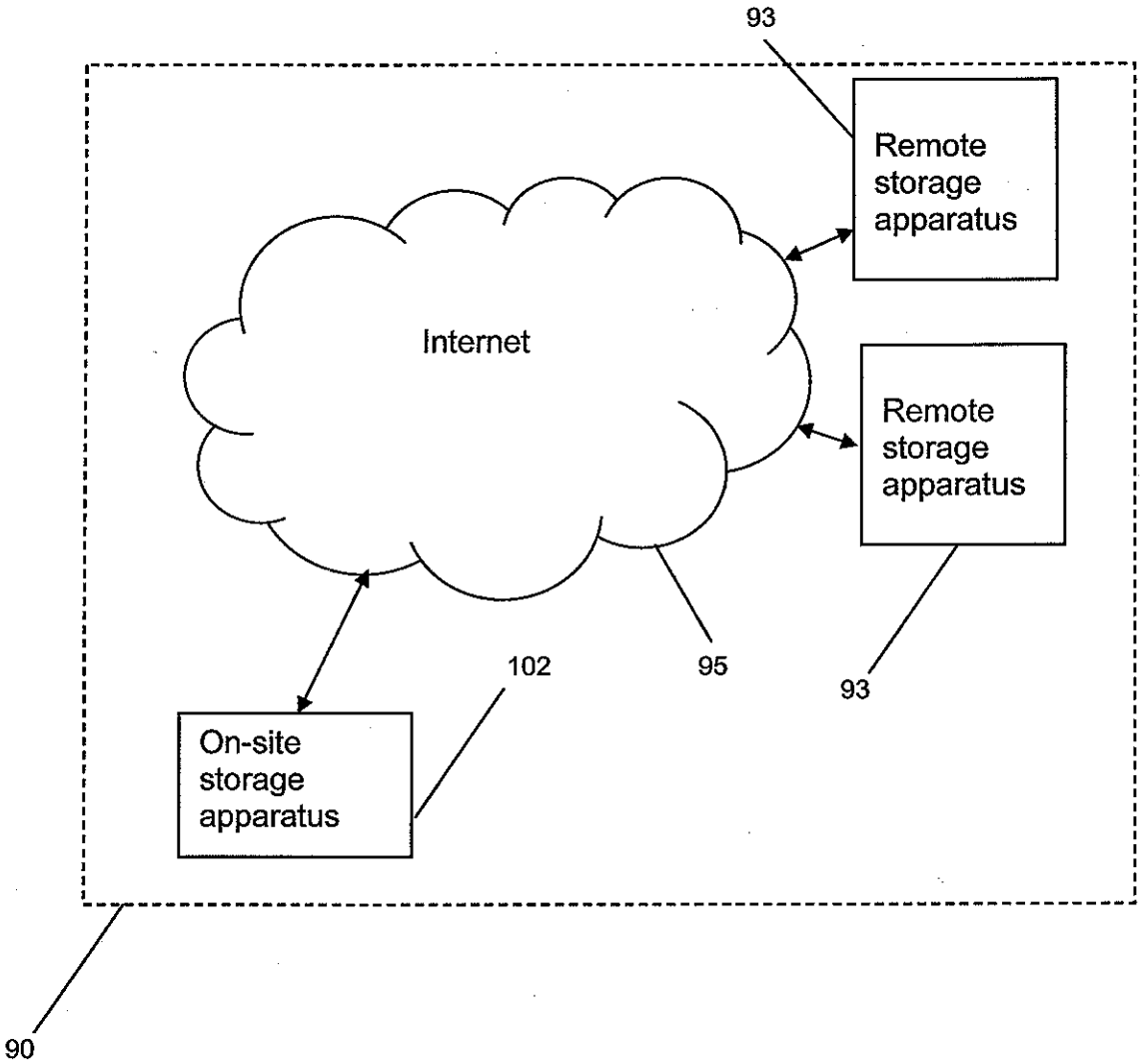
93
Remote storage apparatus
Internet
Remote storage apparatus
102
95
93
On-site storage apparatus
90

Figure 7