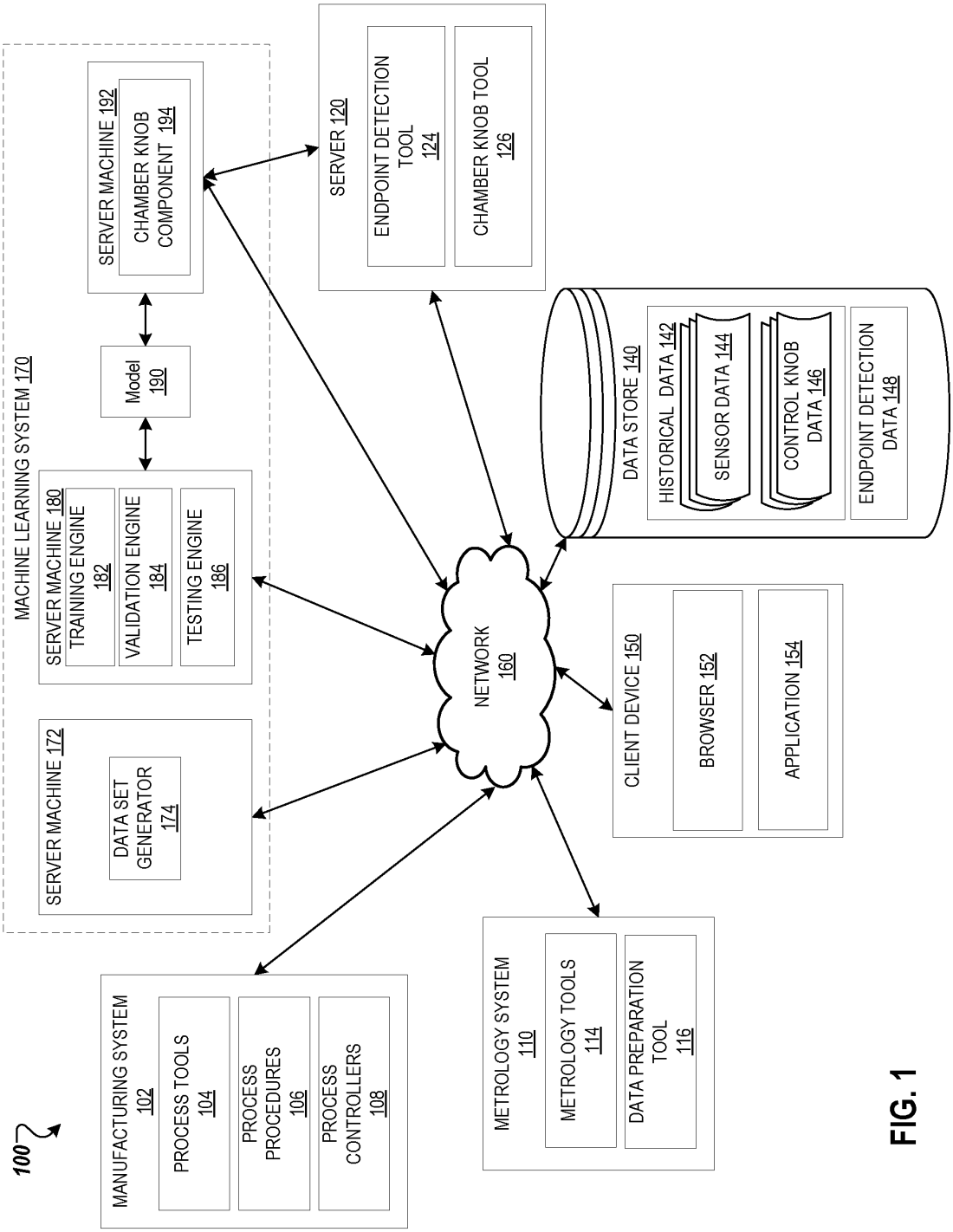
100
MANUFACTURING SYSTEM 102
PROCESS TOOLS 104
PROCESS PROCEDURES 106
PROCESS CONTROLLERS 108
METROLOGY SYSTEM 110
METROLOGY TOOLS 114
DATA PREPARATION TOOL 116
MACHINE LEARNING SYSTEM 170
SERVER MACHINE 172
DATA SET GENERATOR 174
SERVER MACHINE 180
TRAINING ENGINE 182
VALIDATION ENGINE 184
TESTING ENGINE 186
Model 190
SERVER MACHINE 192
CHAMBER KNOB COMPONENT 194
SERVER 120
ENDPOINT DETECTION TOOL 124
CHAMBER KNOB TOOL 126
NETWORK 160
DATA STORE 140
HISTORICAL DATA 142
SENSOR DATA 144
CONTROL KNOB DATA 146
ENDPOINT DETECTION DATA 148
CLIENT DEVICE 150
BROWSER 152
APPLICATION 154

FIG. 1

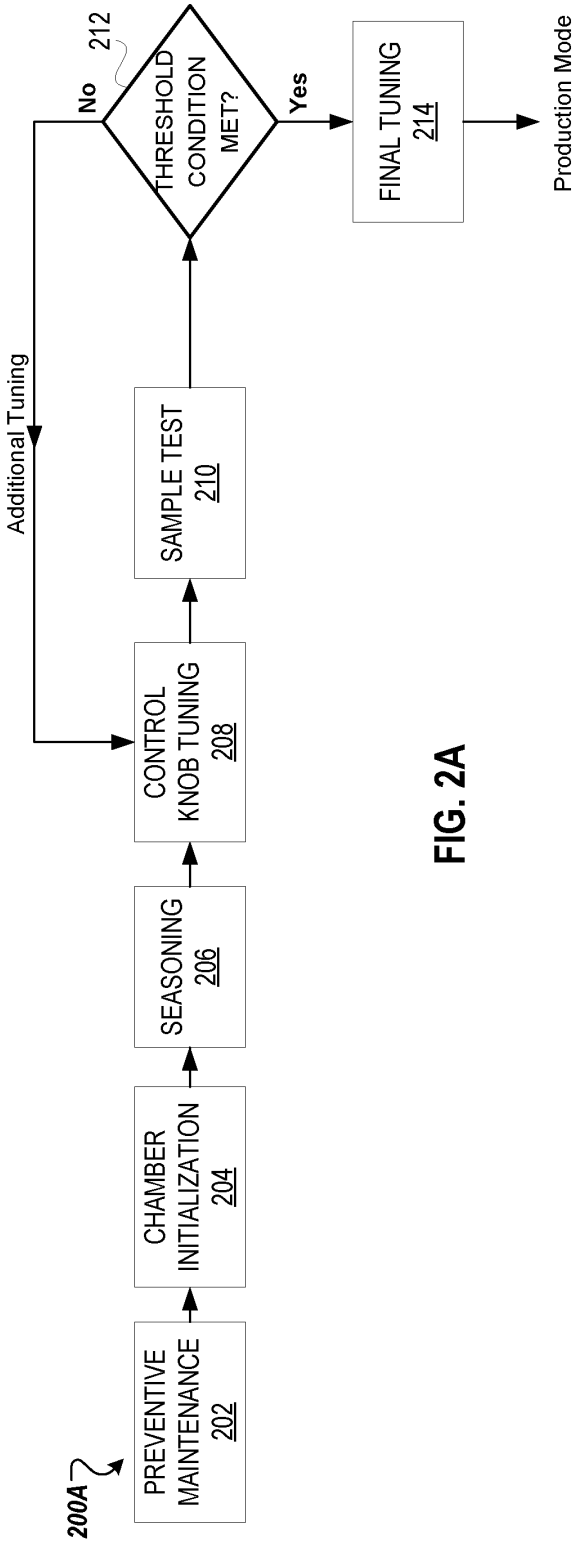
200A
PREVENTIVE MAINTENANCE 202
CHAMBER INITIALIZATION 204
SEASONING 206
CONTROL KNOB TUNING 208
SAMPLE TEST 210
THRESHOLD CONDITION MET? 212
No
Yes
Additional Tuning
FINAL TUNING 214
Production Mode

FIG. 2A

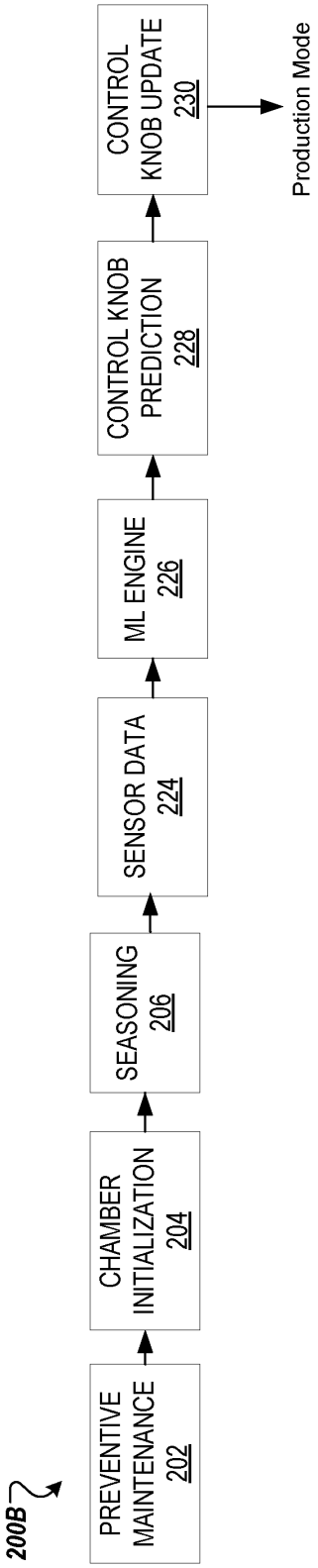
200B
PREVENTIVE MAINTENANCE 202
CHAMBER INITIALIZATION 204
SEASONING 206
SENSOR DATA 224
ML ENGINE 226
CONTROL KNOB PREDICTION 228
CONTROL KNOB UPDATE 230
Production Mode

FIG. 2B

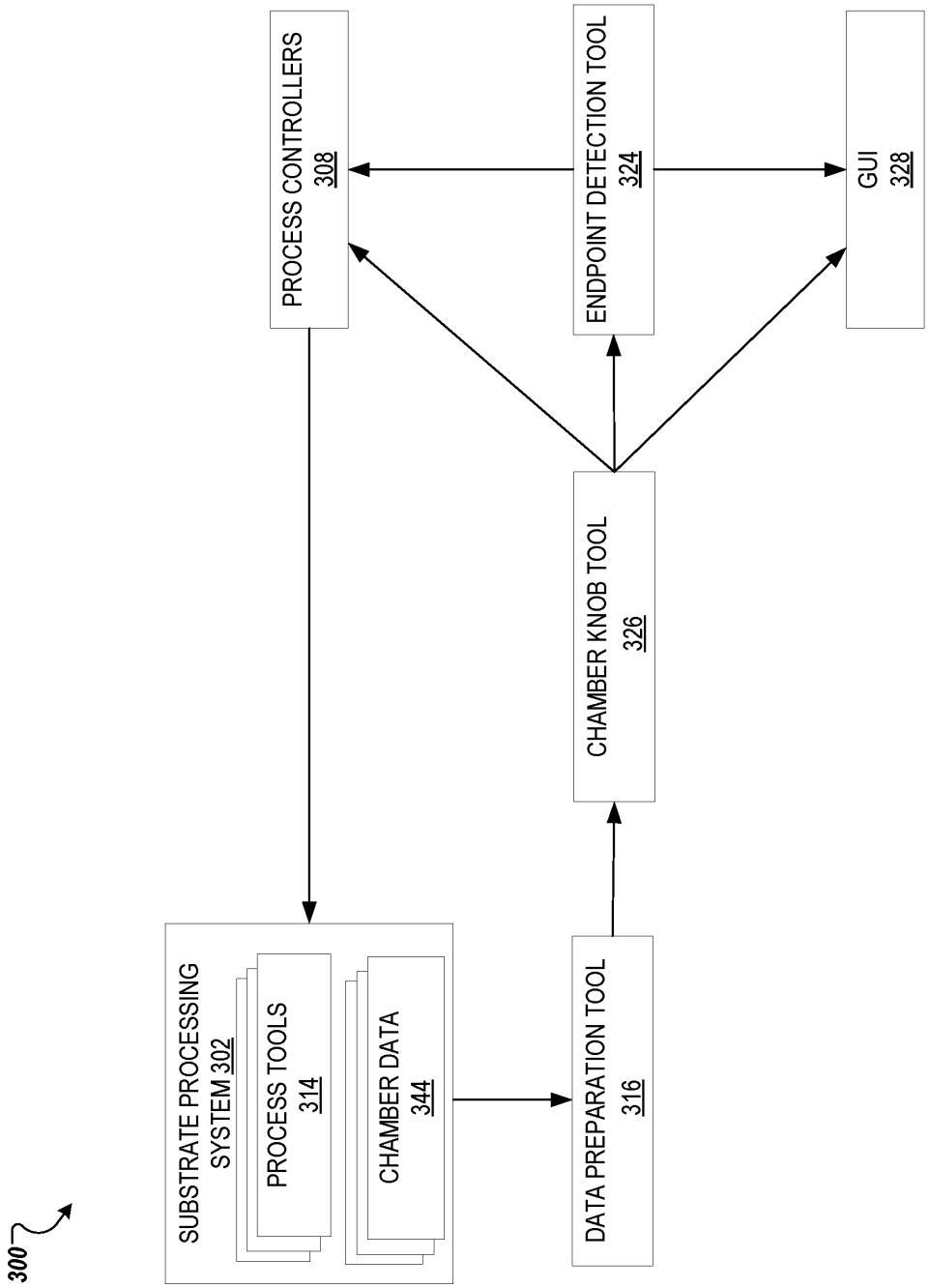
300
SUBSTRATE PROCESSING SYSTEM 302
PROCESS TOOLS 314
CHAMBER DATA 344
DATA PREPARATION TOOL 316
CHAMBER KNOB TOOL 326
PROCESS CONTROLLERS 308
ENDPOINT DETECTION TOOL 324
GUI 328

FIG. 3

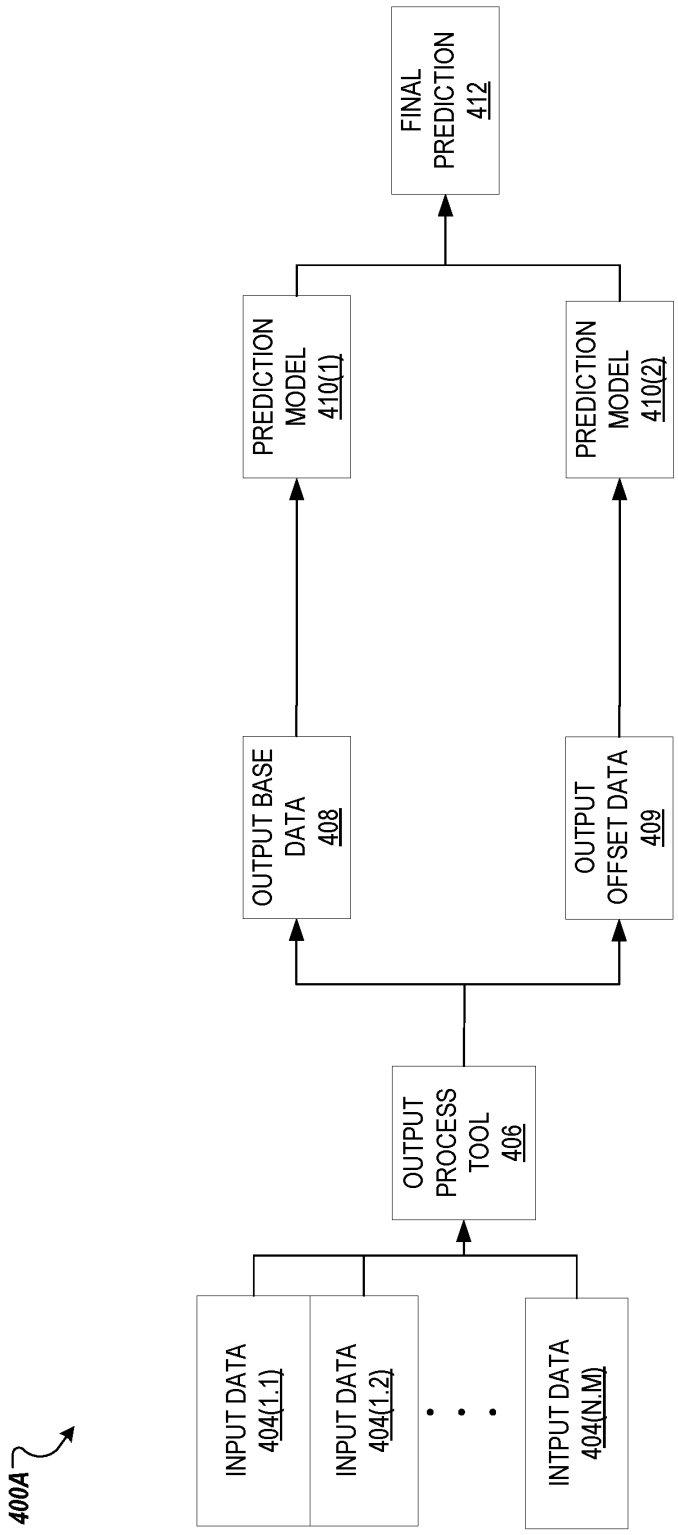
400A
INPUT DATA 404(1.1)
INPUT DATA 404(1.2)
INTPUT DATA 404(N.M)
OUTPUT PROCESS TOOL 406
OUTPUT BASE DATA 408
OUTPUT OFFSET DATA 409
PREDICTION MODEL 410(1)
PREDICTION MODEL 410(2)
FINAL PREDICTION 412

FIG. 4A

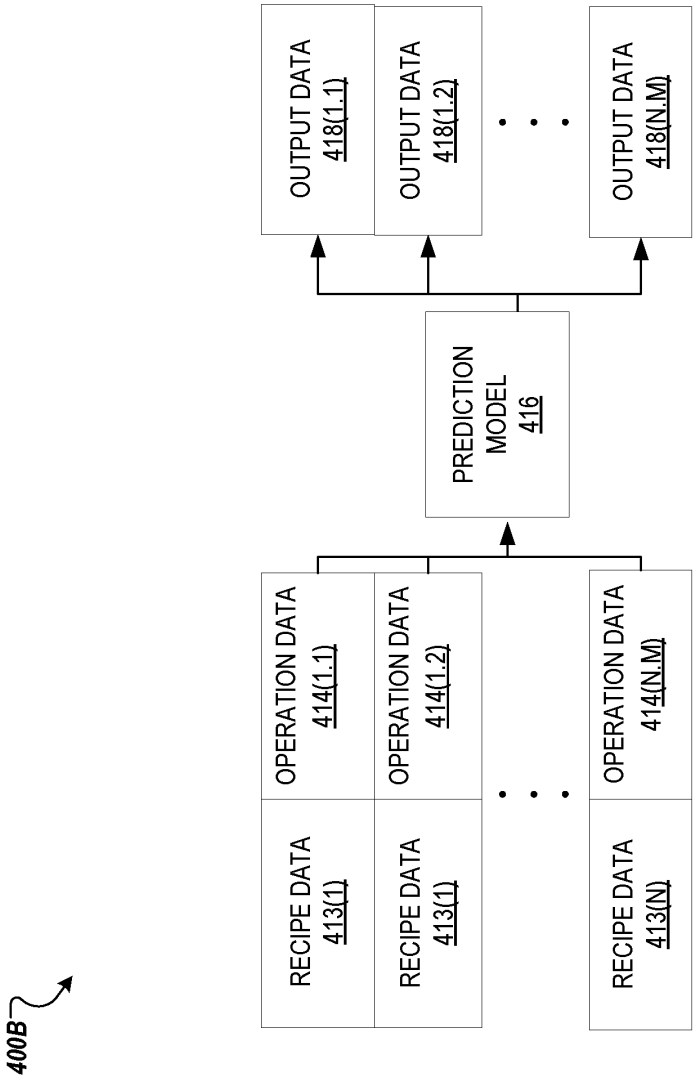
400B
RECIPE DATA 413(1)
RECIPE DATA 413(1)
RECIPE DATA 413(N)
OPERATION DATA 414(1.1)
OPERATION DATA 414(1.2)
OPERATION DATA 414(N.M)
PREDICTION MODEL 416
OUTPUT DATA 418(1.1)
OUTPUT DATA 418(1.2)
OUTPUT DATA 418(N.M)

FIG. 4B

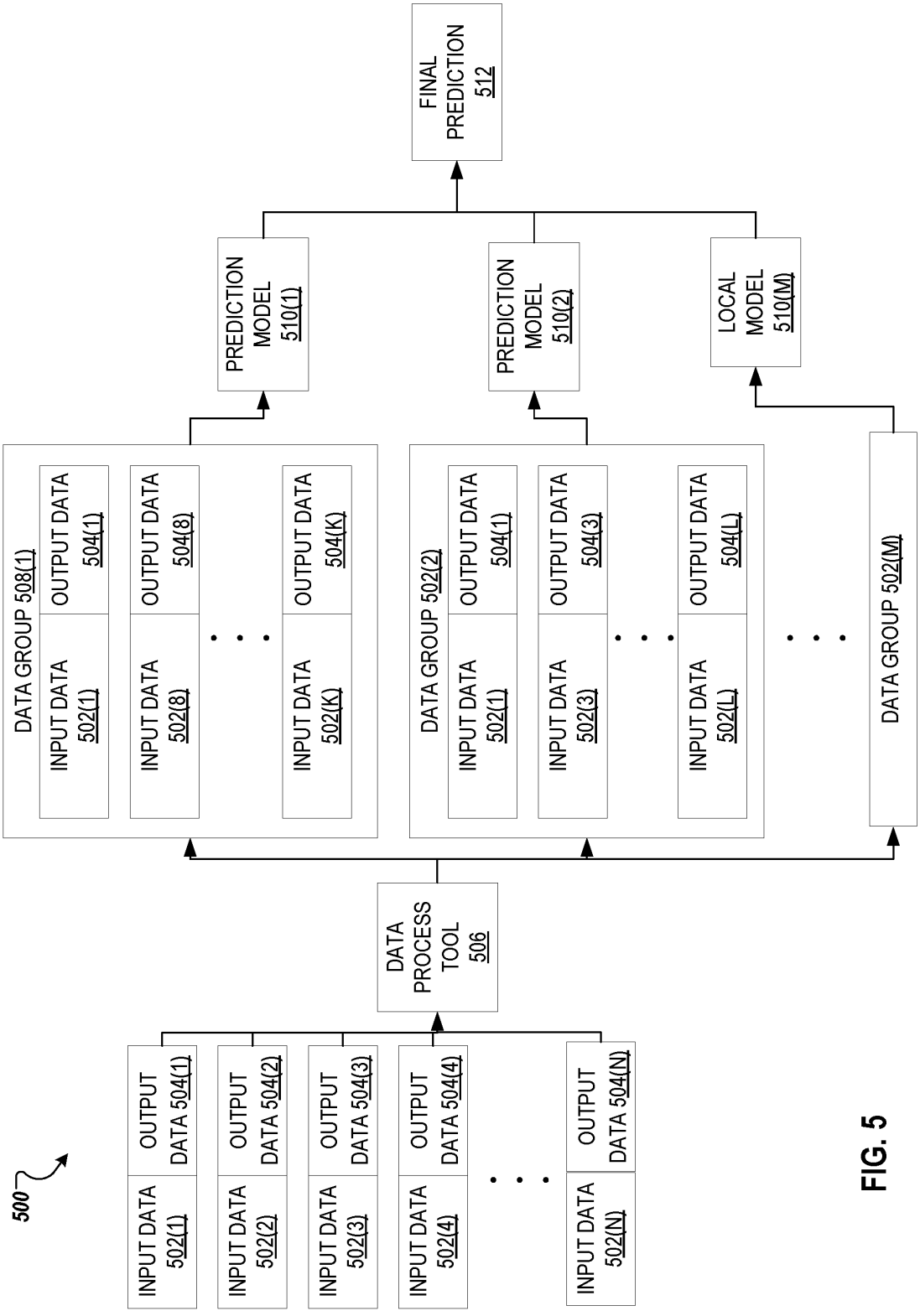
500
INPUT DATA 502(1)
OUTPUT DATA 504(1)
INPUT DATA 502(2)
OUTPUT DATA 504(2)
INPUT DATA 502(3)
OUTPUT DATA 504(3)
INPUT DATA 502(4)
OUTPUT DATA 504(4)
INPUT DATA 502(N)
OUTPUT DATA 504(N)
DATA PROCESS TOOL 506
DATA GROUP 508(1)
INPUT DATA 502(1)
OUTPUT DATA 504(1)
INPUT DATA 502(8)
OUTPUT DATA 504(8)
INPUT DATA 502(K)
OUTPUT DATA 504(K)
DATA GROUP 502(2)
INPUT DATA 502(1)
OUTPUT DATA 504(1)
INPUT DATA 502(3)
OUTPUT DATA 504(3)
INPUT DATA 502(L)
OUTPUT DATA 504(L)
DATA GROUP 502(M)
PREDICTION MODEL 510(1)
PREDICTION MODEL 510(2)
LOCAL MODEL 510(M)
FINAL PREDICTION 512

FIG. 5

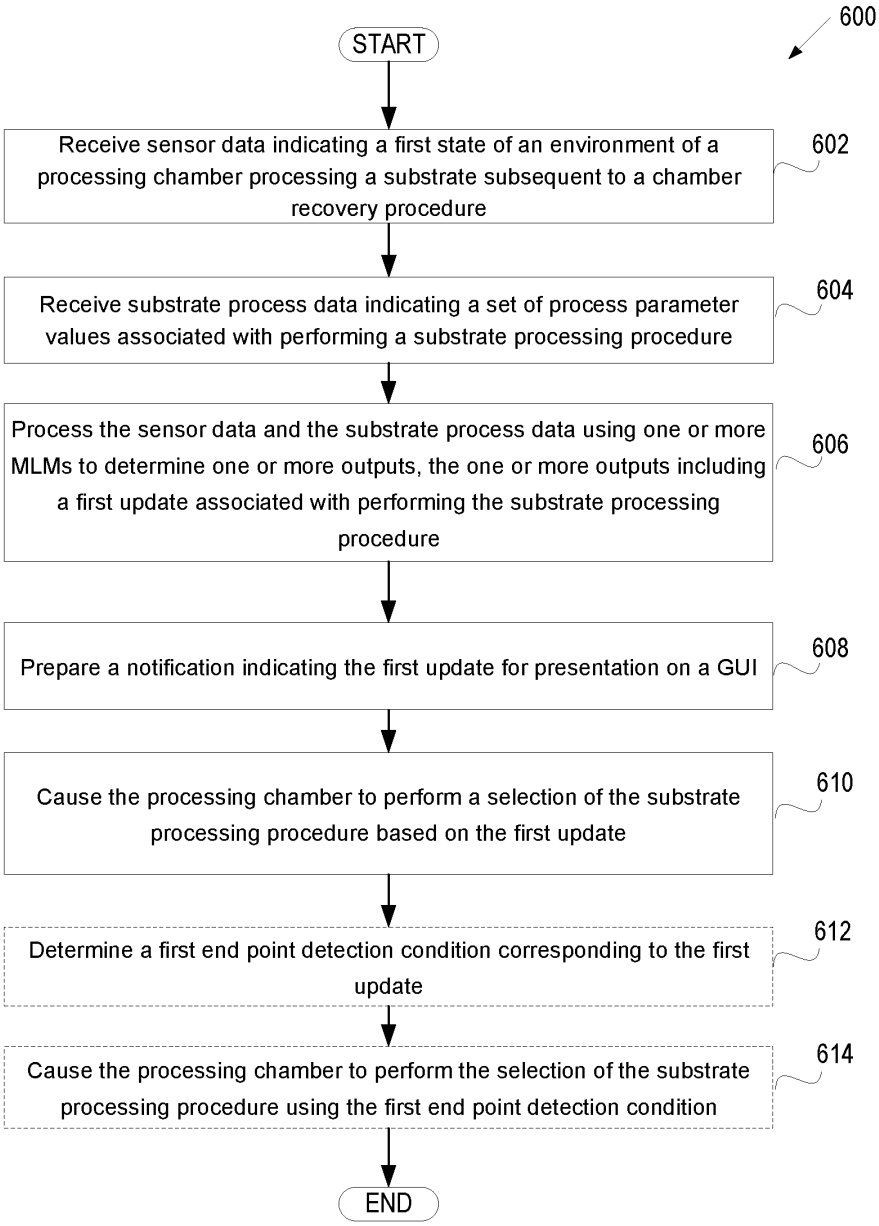
600
START
Receive sensor data indicating a first state of an environment of a processing chamber processing a substrate subsequent to a chamber recovery procedure
602
Receive substrate process data indicating a set of process parameter values associated with performing a substrate processing procedure
604
Process the sensor data and the substrate process data using one or more MLMs to determine one or more outputs, the one or more outputs including a first update associated with performing the substrate processing procedure
606
Prepare a notification indicating the first update for presentation on a GUI
608
Cause the processing chamber to perform a selection of the substrate processing procedure based on the first update
610
Determine a first end point detection condition corresponding to the first update
612
Cause the processing chamber to perform the selection of the substrate processing procedure using the first end point detection condition
614
END

FIG. 6

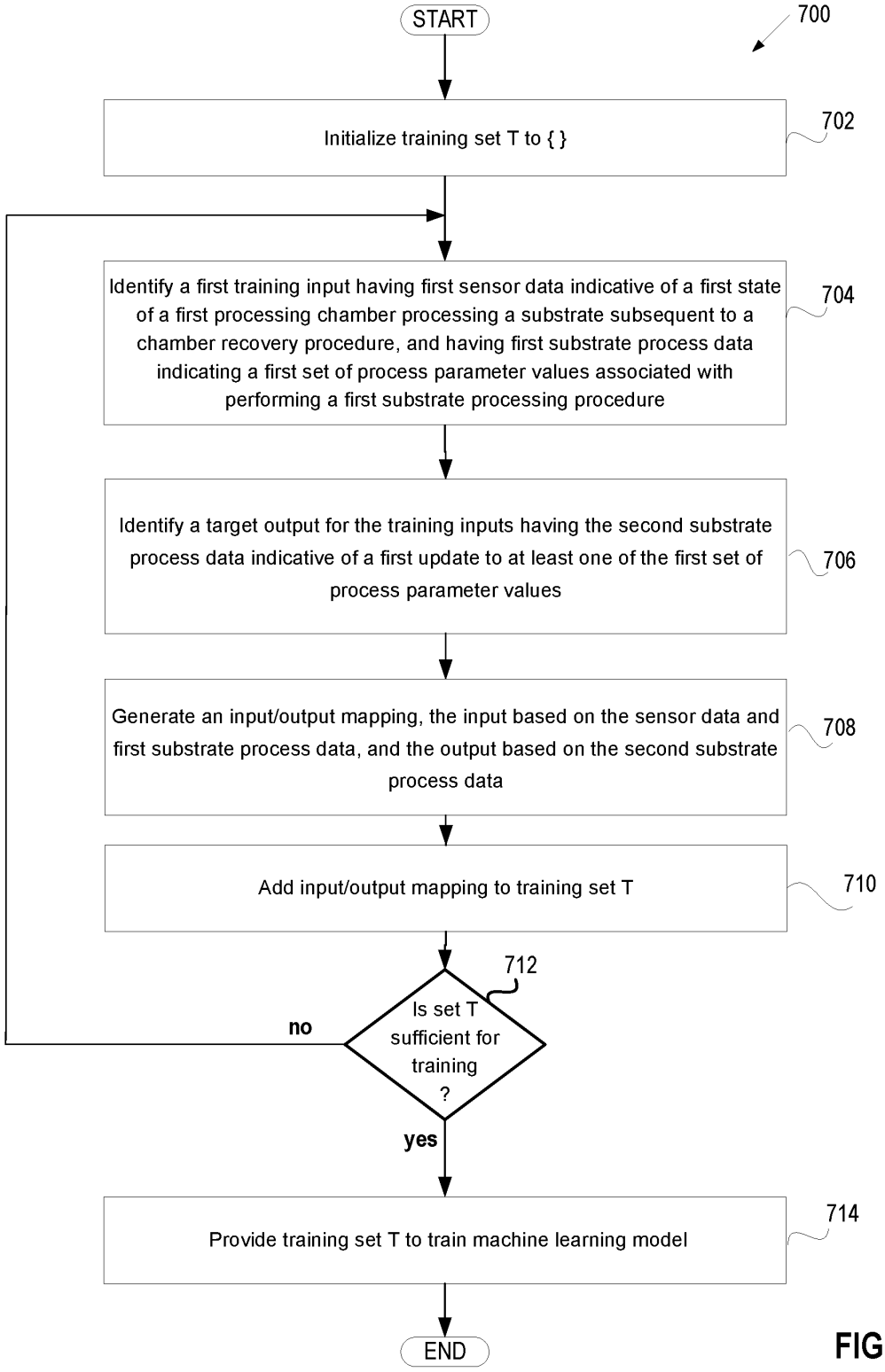
START
700
Initialize training set T to { }
702
Identify a first training input having first sensor data indicative of a first state of a first processing chamber processing a substrate subsequent to a chamber recovery procedure, and having first substrate process data indicating a first set of process parameter values associated with performing a first substrate processing procedure
704
Identify a target output for the training inputs having the second substrate process data indicative of a first update to at least one of the first set of process parameter values
706
Generate an input/output mapping, the input based on the sensor data and first substrate process data, and the output based on the second substrate process data
708
Add input/output mapping to training set T
710
712
Is set T sufficient for training ?
no
yes
Provide training set T to train machine learning model
714
END

FIG. 7

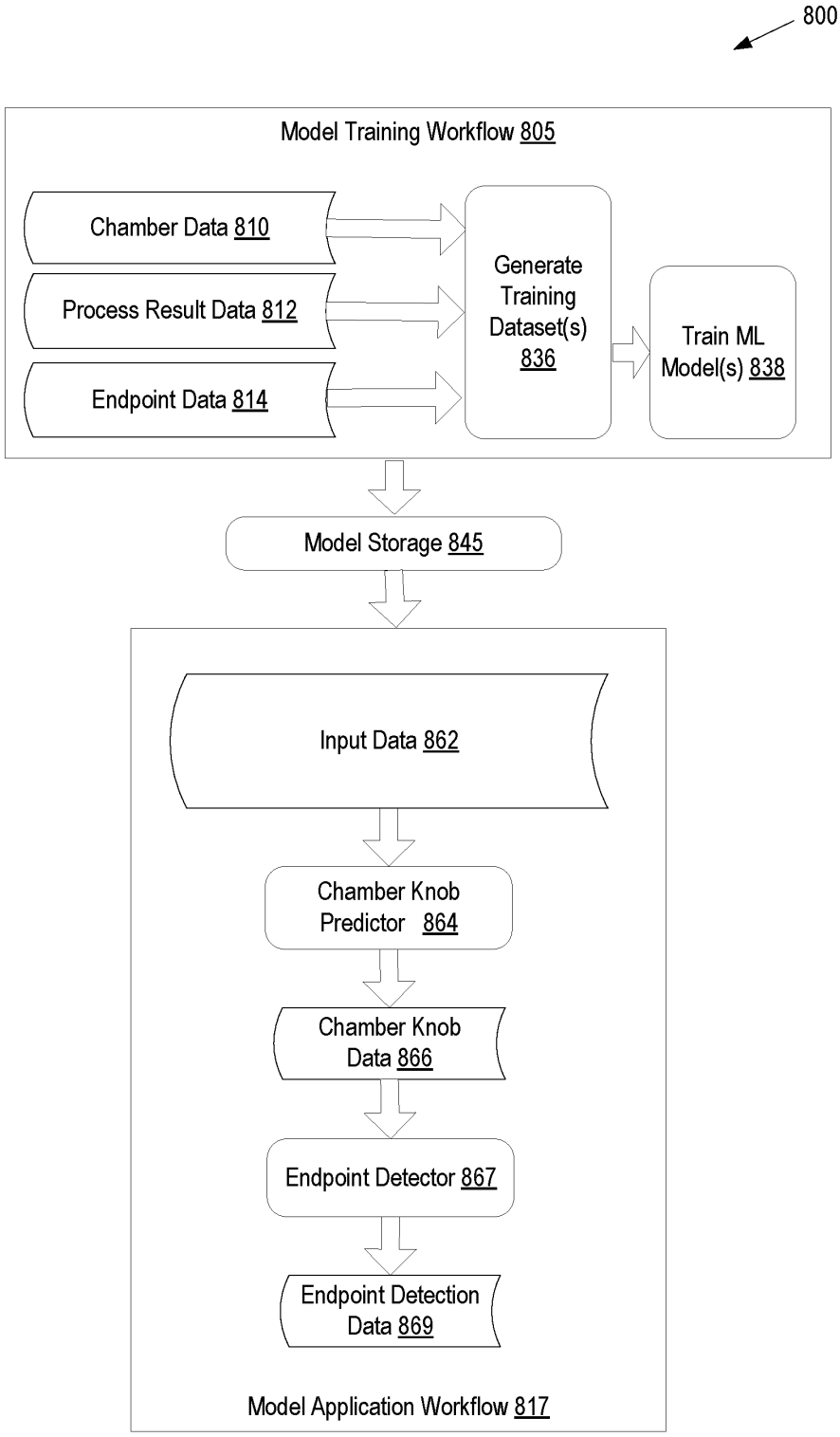
800
Model Training Workflow 805
Chamber Data 810
Process Result Data 812
Endpoint Data 814
Generate Training Dataset(s) 836
Train ML Model(s) 838
Model Storage 845
Input Data 862
Chamber Knob Predictor 864
Chamber Knob Data 866
Endpoint Detector 867
Endpoint Detection Data 869
Model Application Workflow 817

FIG. 8

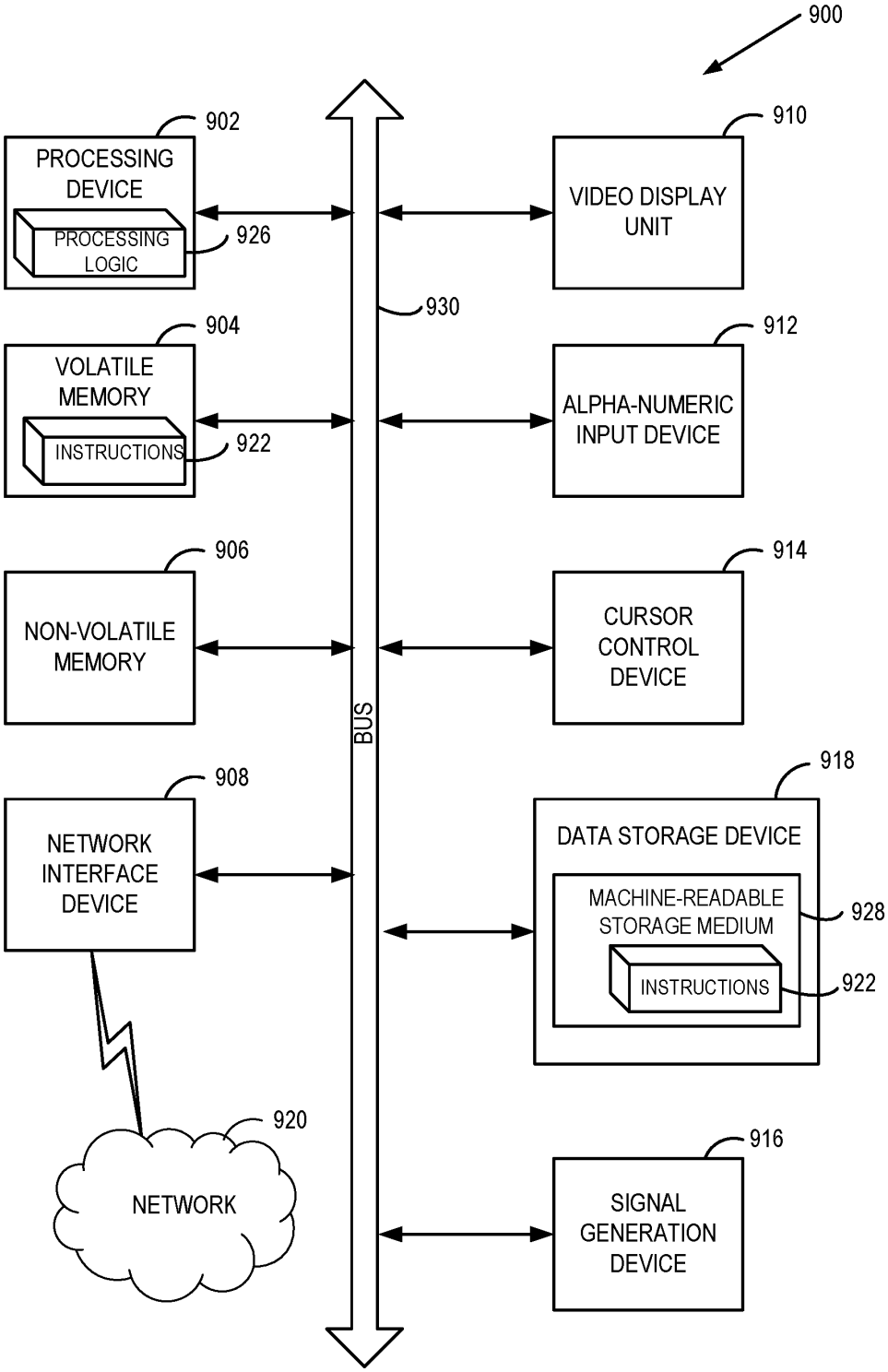
900
902
PROCESSING DEVICE
PROCESSING LOGIC
926
904
VOLATILE MEMORY
INSTRUCTIONS
922
906
NON-VOLATILE MEMORY
908
NETWORK INTERFACE DEVICE
920
NETWORK
930
BUS
910
VIDEO DISPLAY UNIT
912
ALPHA-NUMERIC INPUT DEVICE
914
CURSOR CONTROL DEVICE
918
DATA STORAGE DEVICE
MACHINE-READABLE STORAGE MEDIUM
928
INSTRUCTIONS
922
916
SIGNAL GENERATION DEVICE

FIG. 9