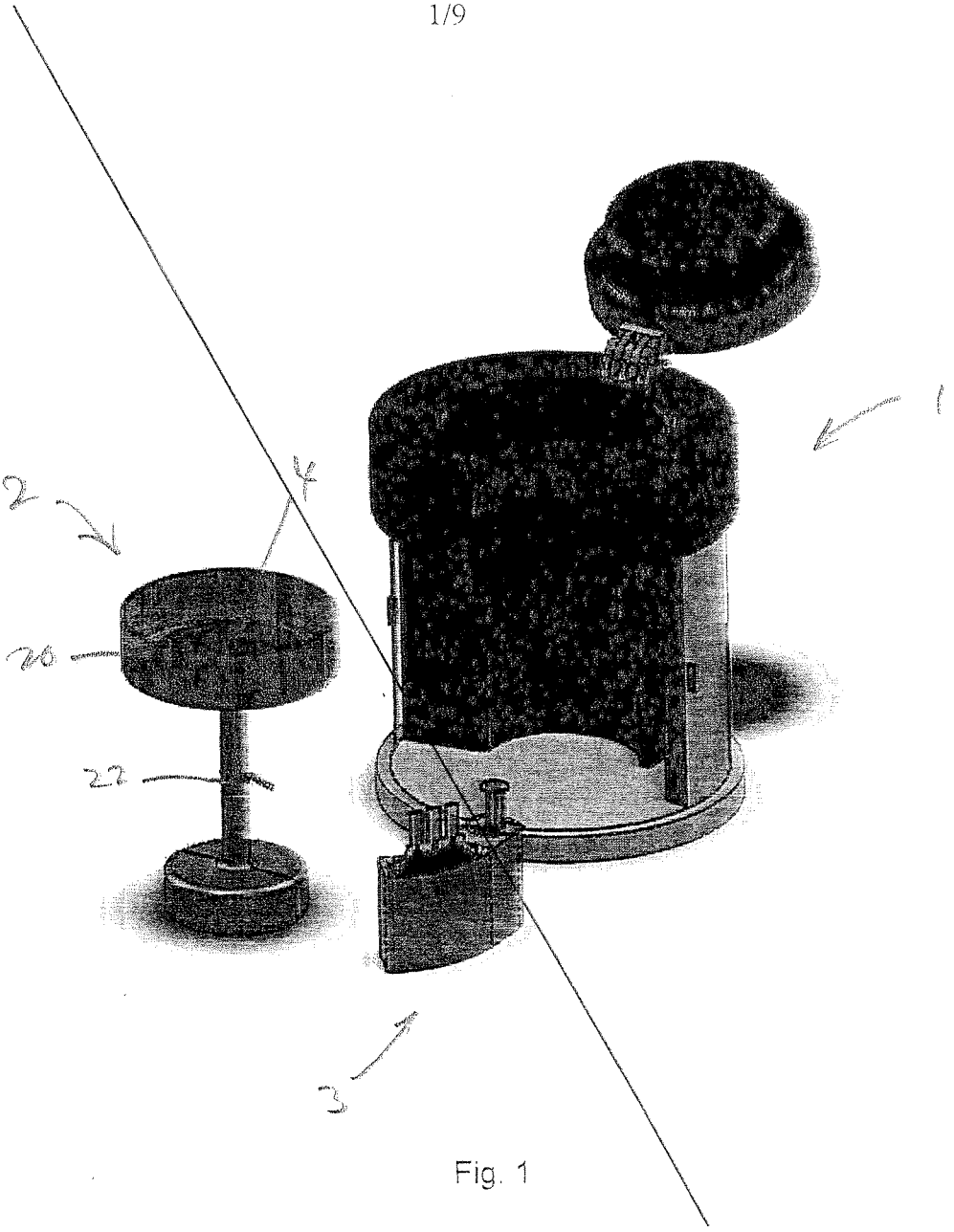

Fig. 1

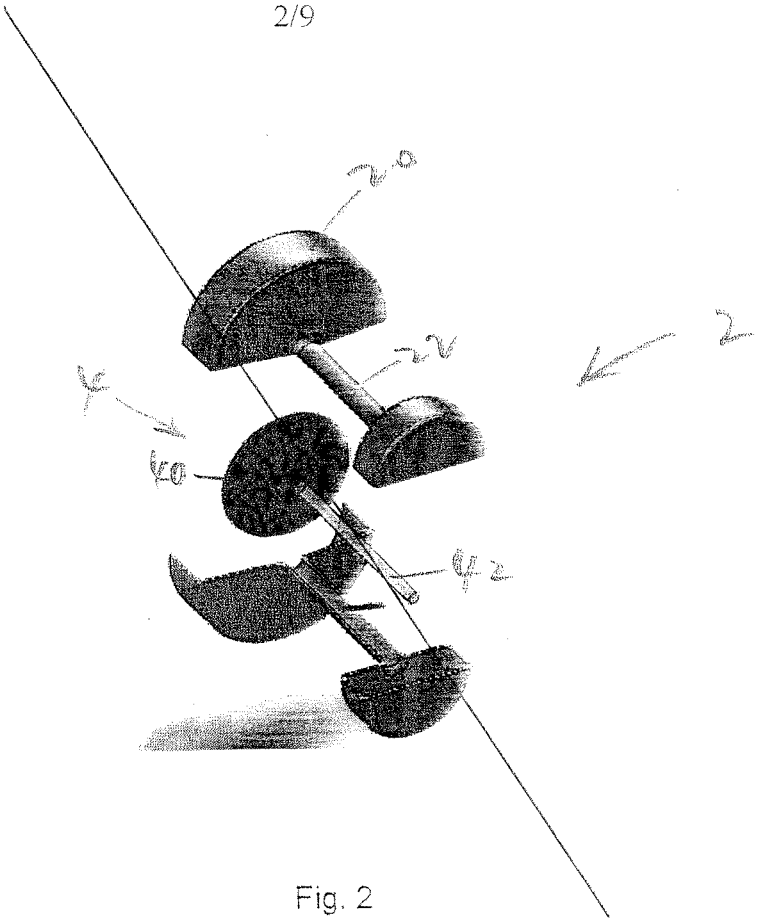

Fig. 2

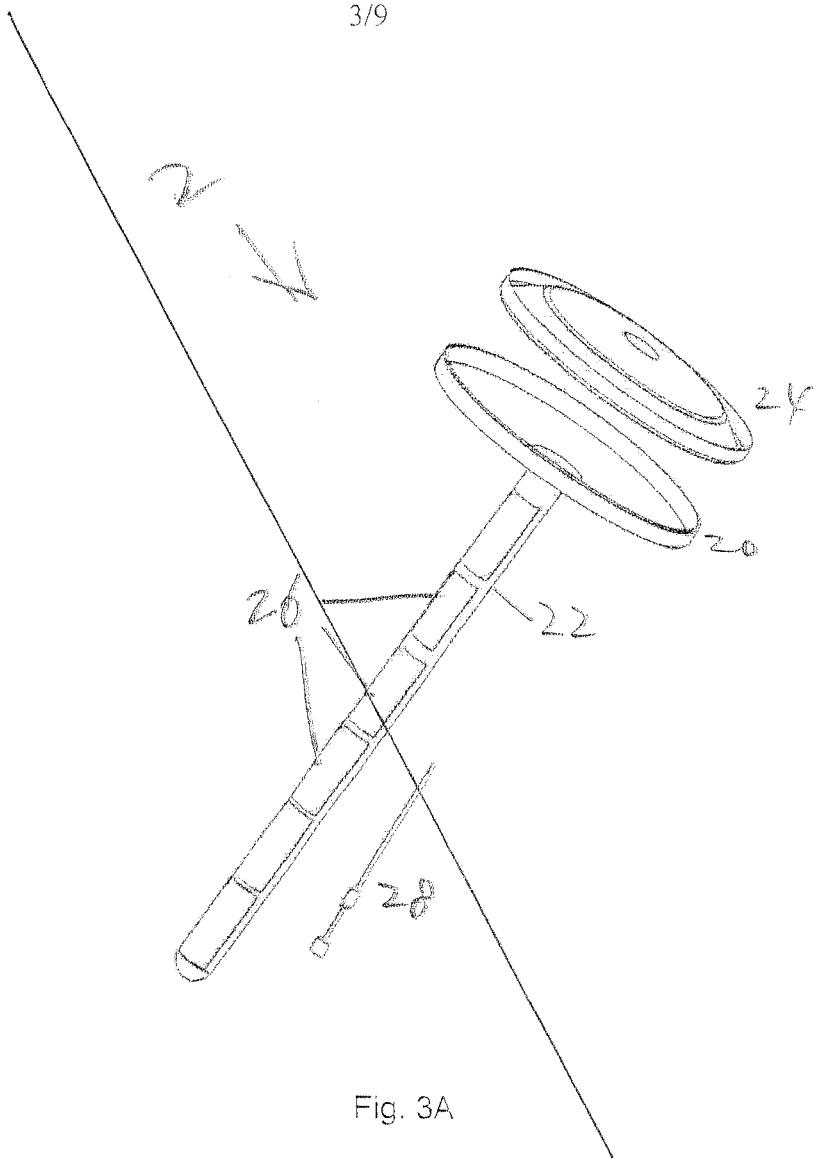

Fig. 3A

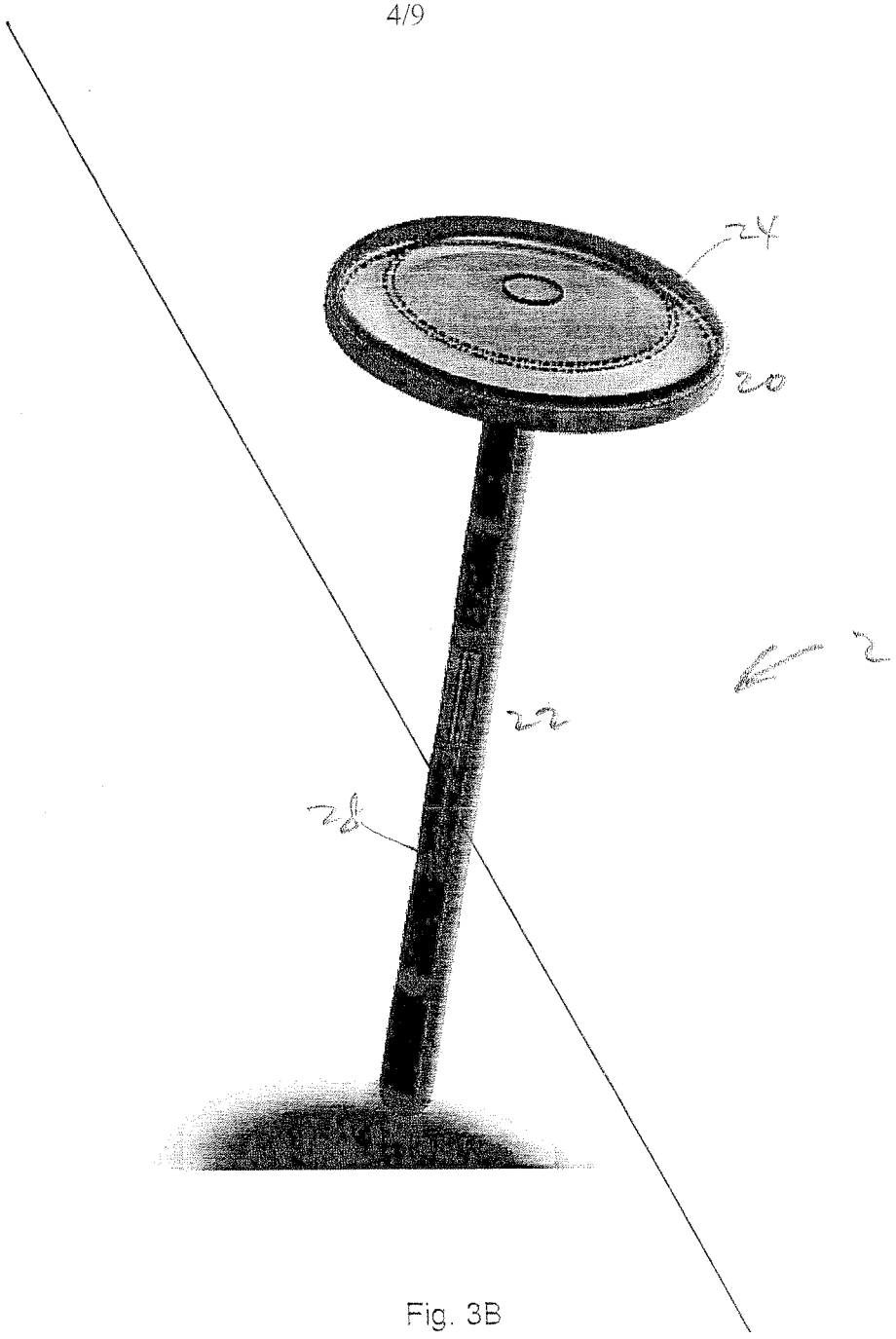

Fig. 3B

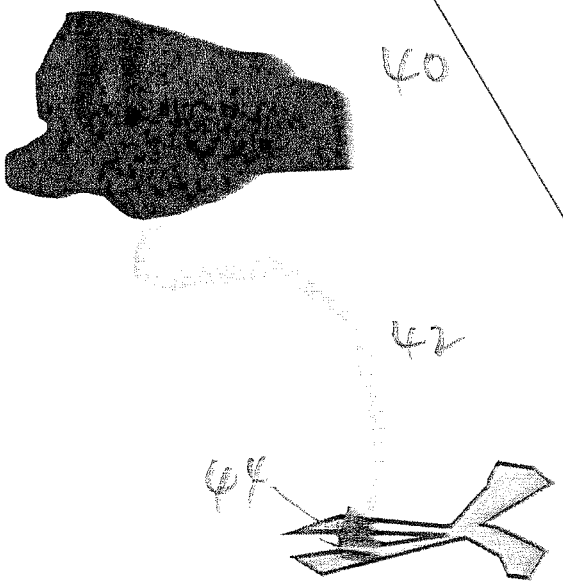

Fig.4A

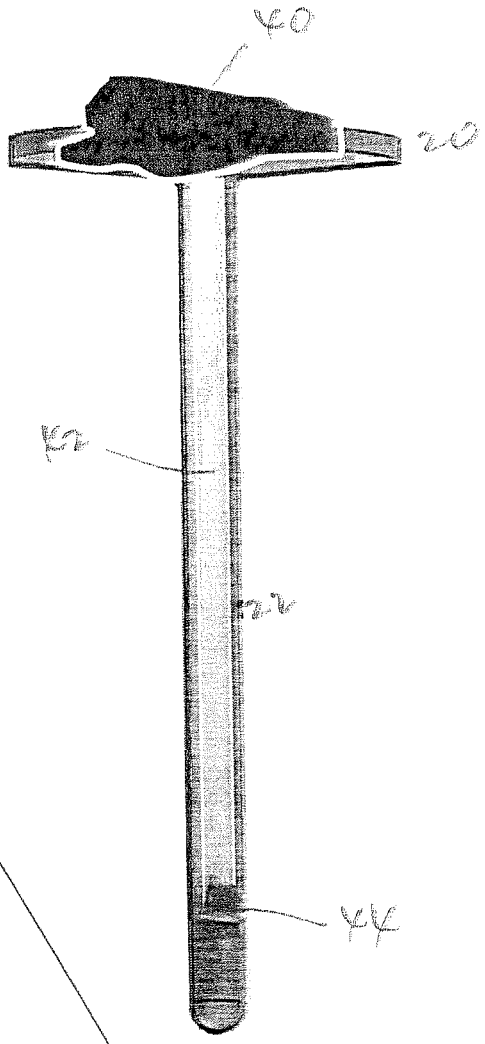

Fig. 4B

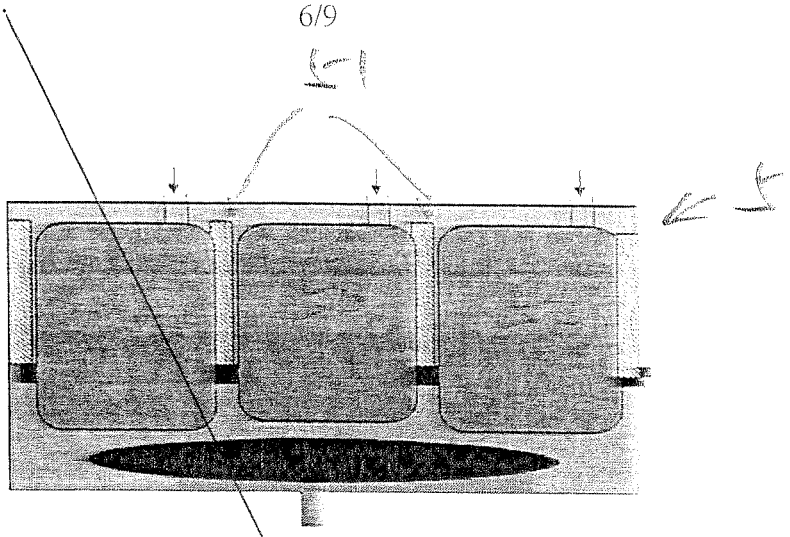

Fig. 5A

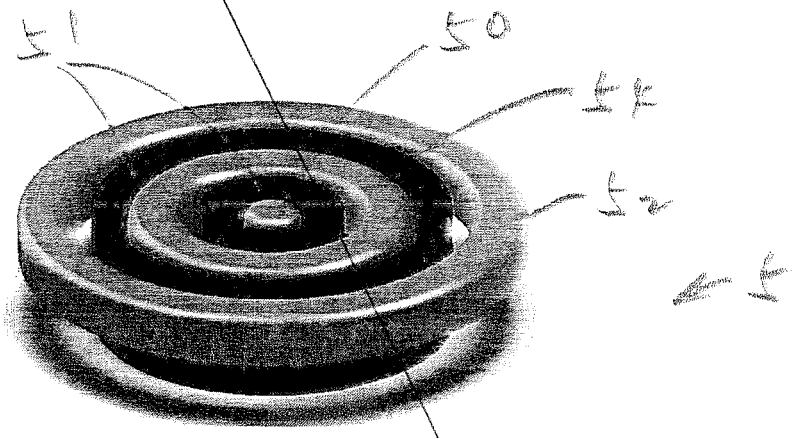

Fig. 5B

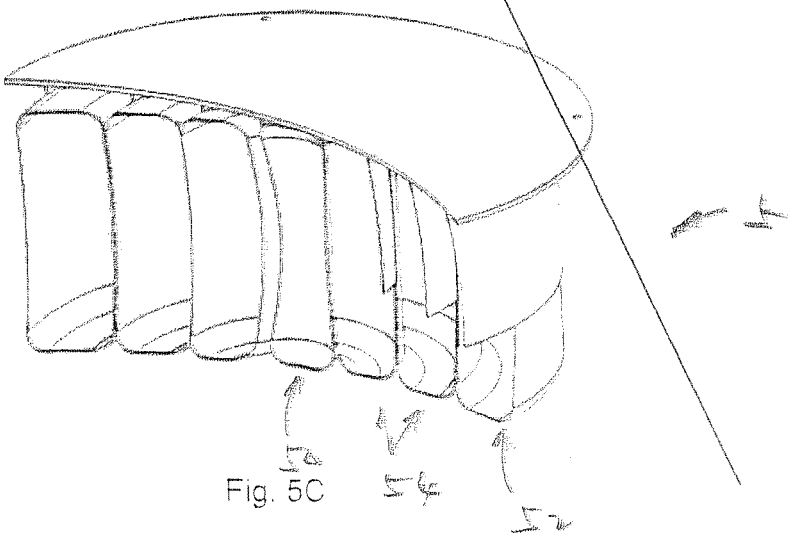

Fig. 5C

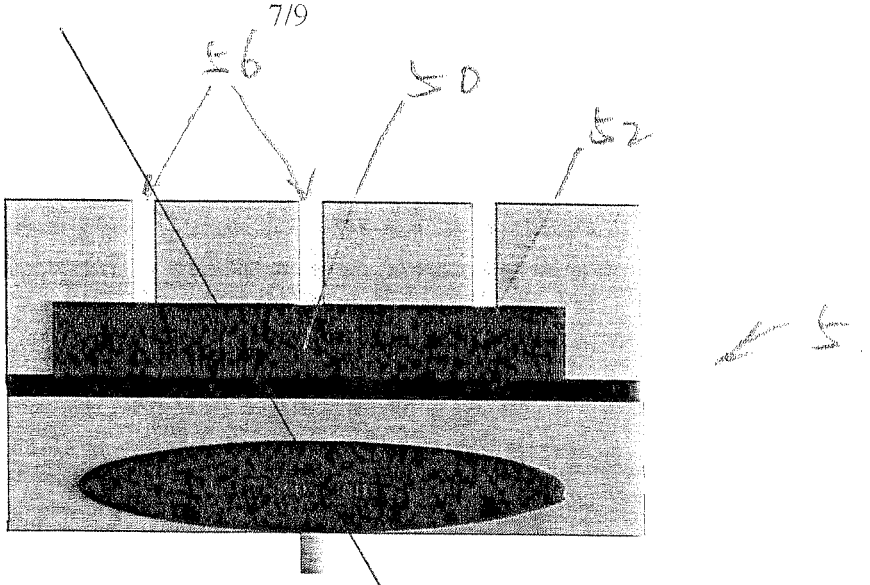

Fig. 6A

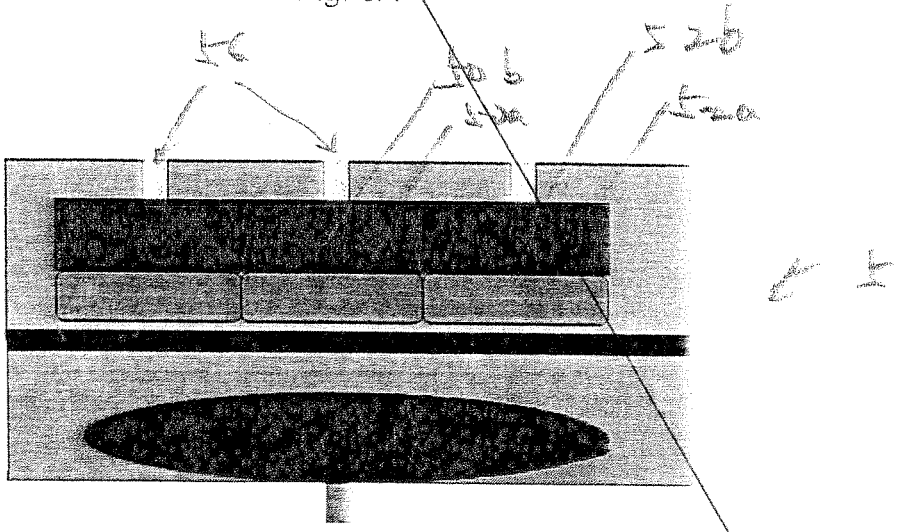

Fig. 6B

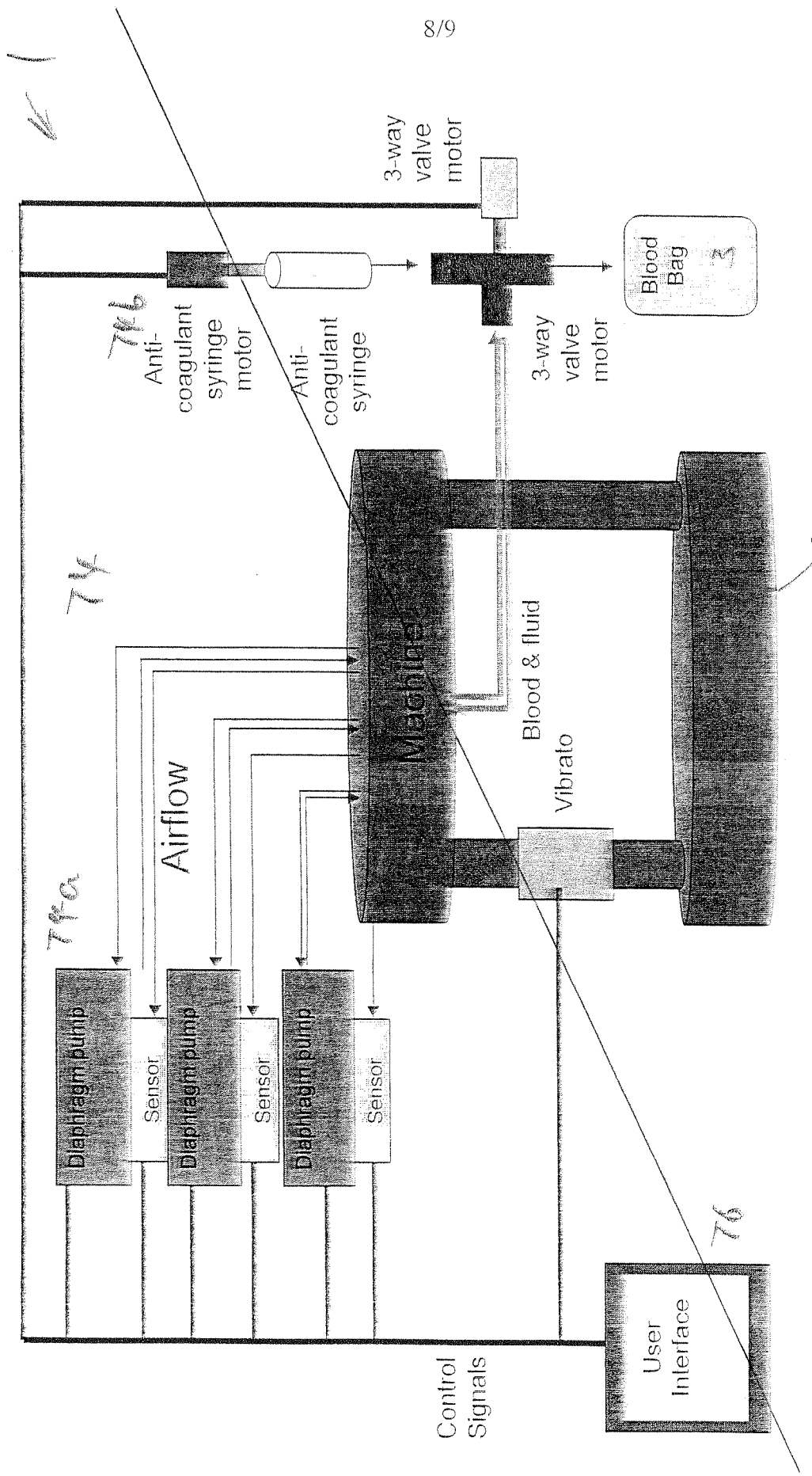
3-way valve motor
Blood Bag
Anti-coagulant syringe motor
Anti-coagulant syringe
3-way valve motor
Machine
Blood & fluid
Vibrato
Airflow
Diaphragm pump
Sensor
Diaphragm pump
Sensor
Diaphragm pump
Sensor
Control Signals
User Interface

Fig. 7

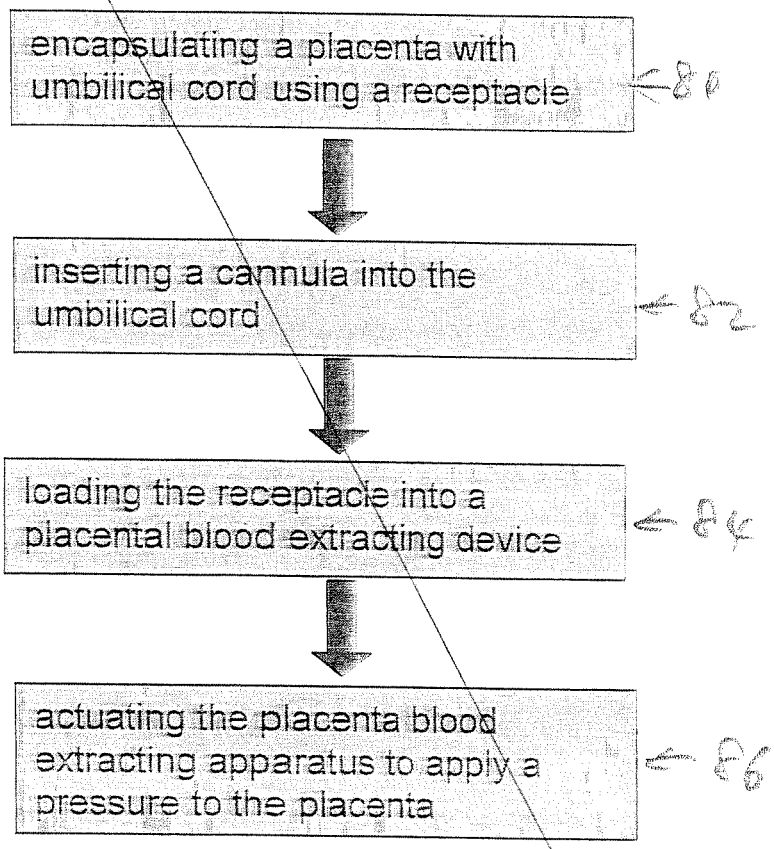
encapsulating a placenta with umbilical cord using a receptacle
inserting a cannula into the umbilical cord
loading the receptacle into a placental blood extracting device
actuating the placenta blood extracting apparatus to apply a pressure to the placenta

Fig. 8

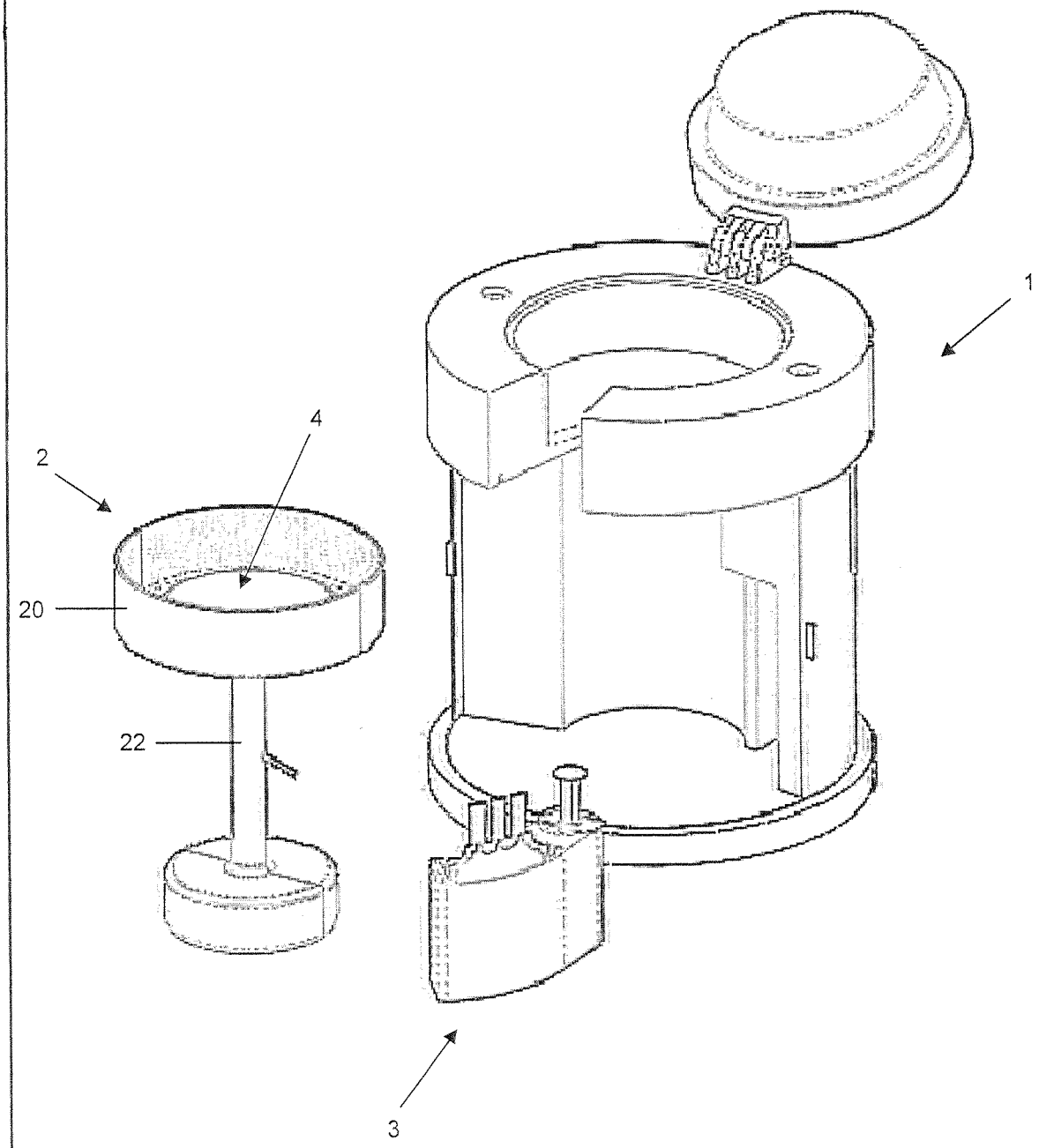

Fig. 1

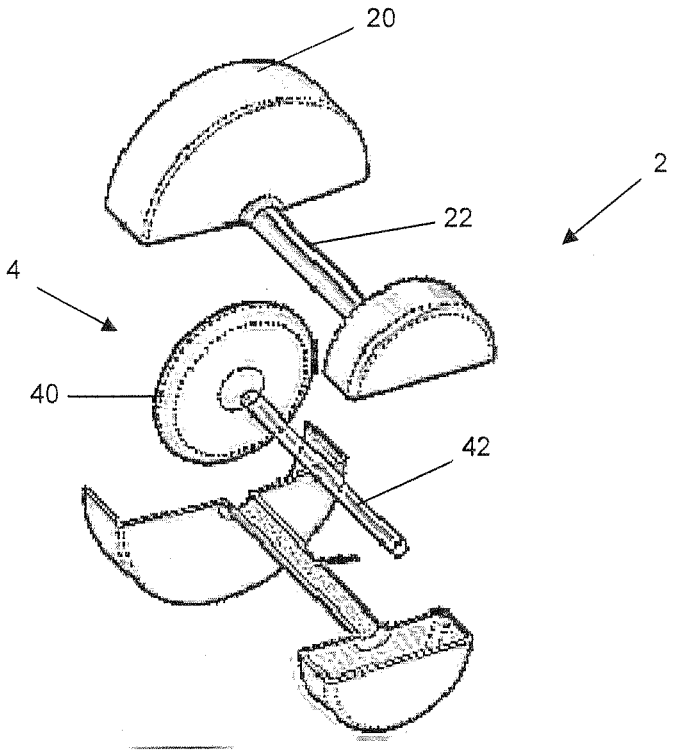

Fig. 2

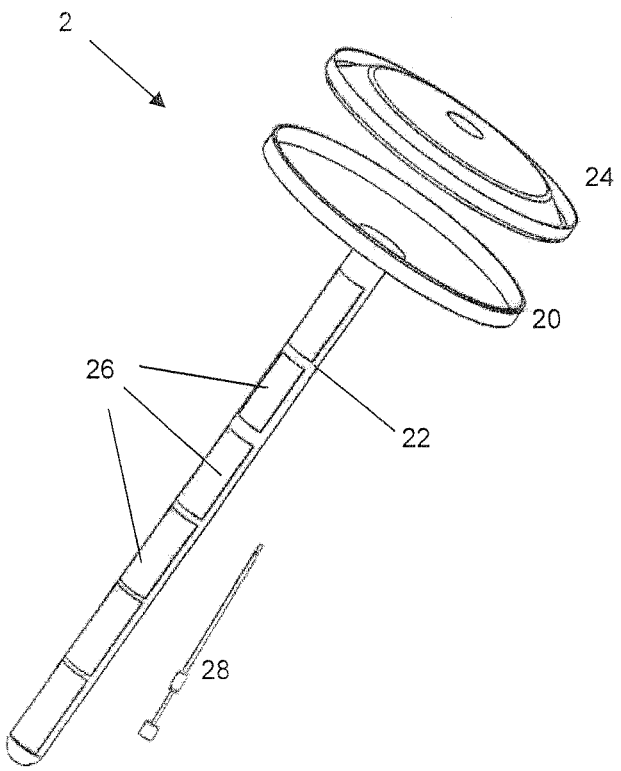

Fig. 3A

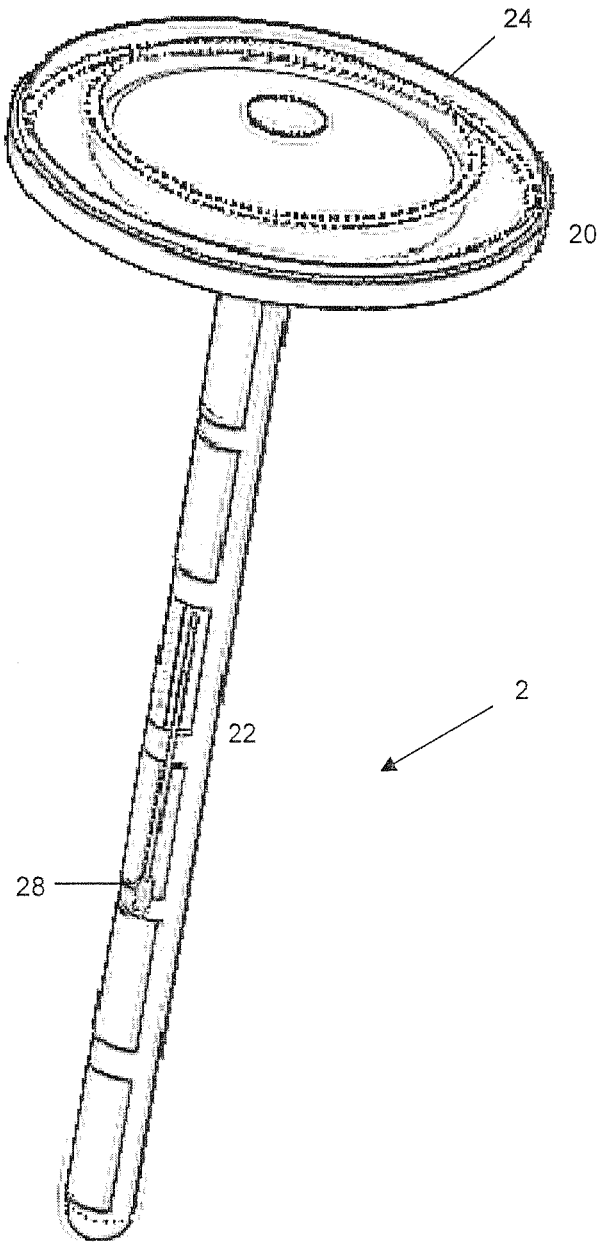

Fig. 3B

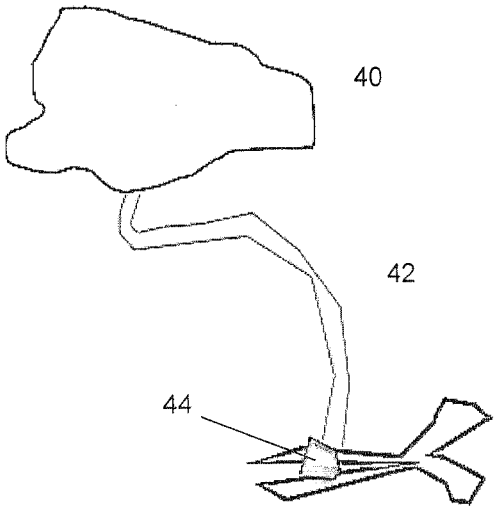

Fig.4A

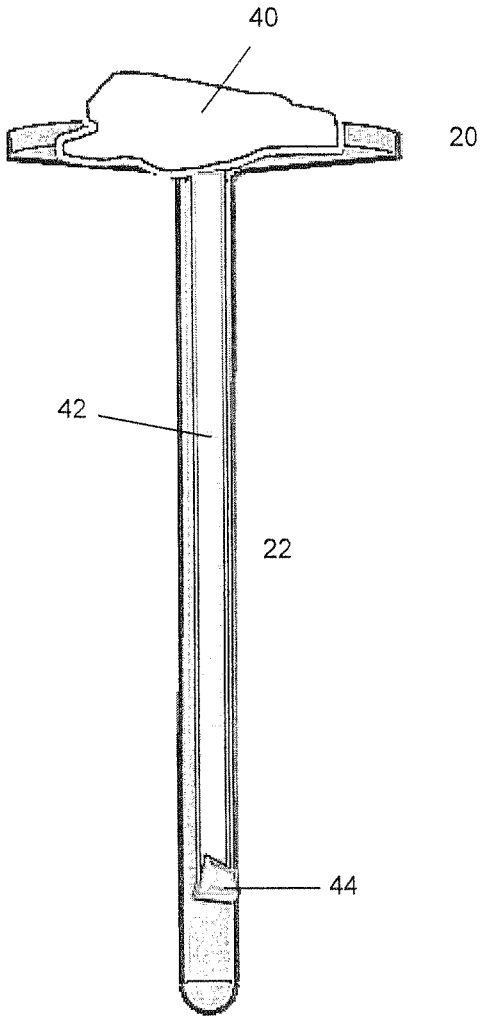

Fig. 4B

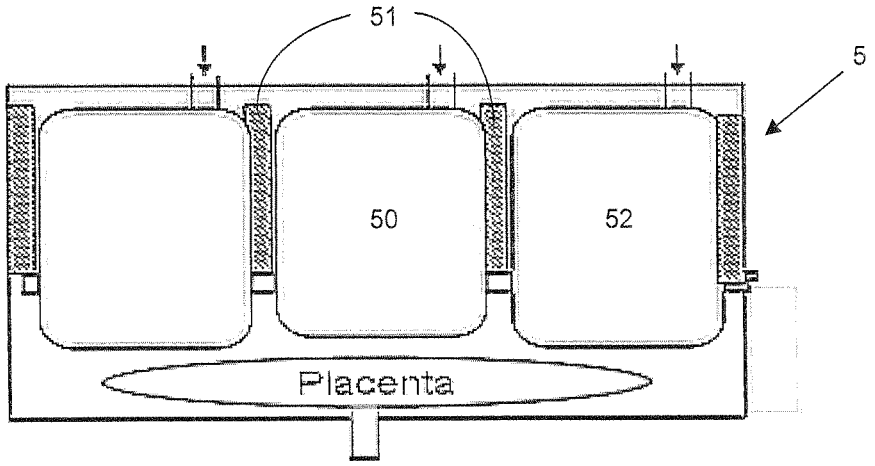

Fig. 5A

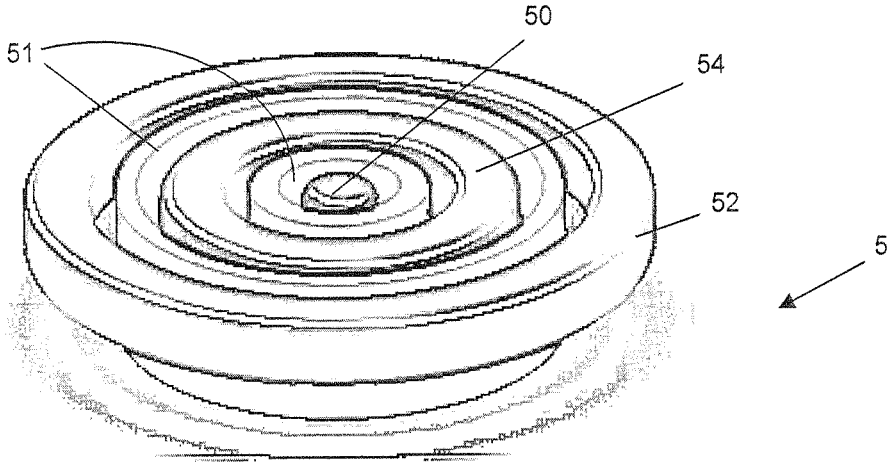

Fig. 5B

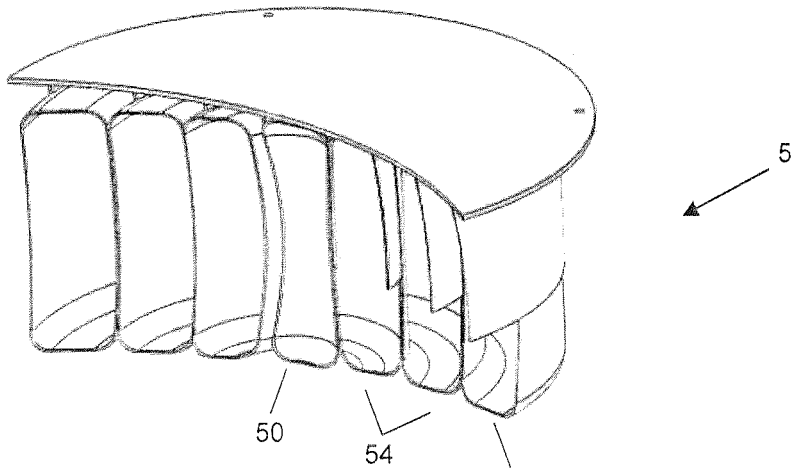

Fig. 5C

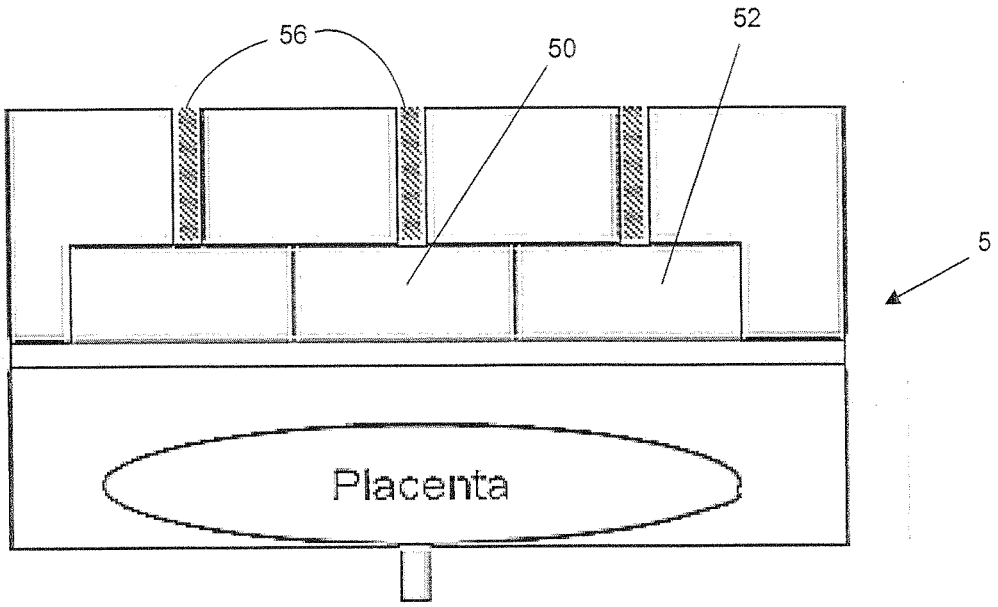

Fig. 6A

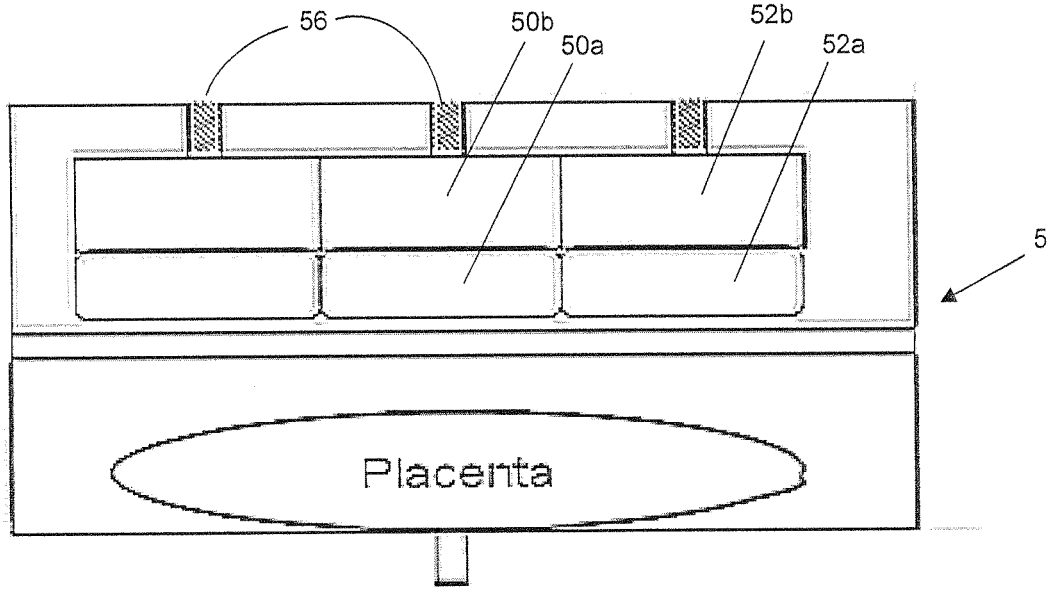

Fig. 6B

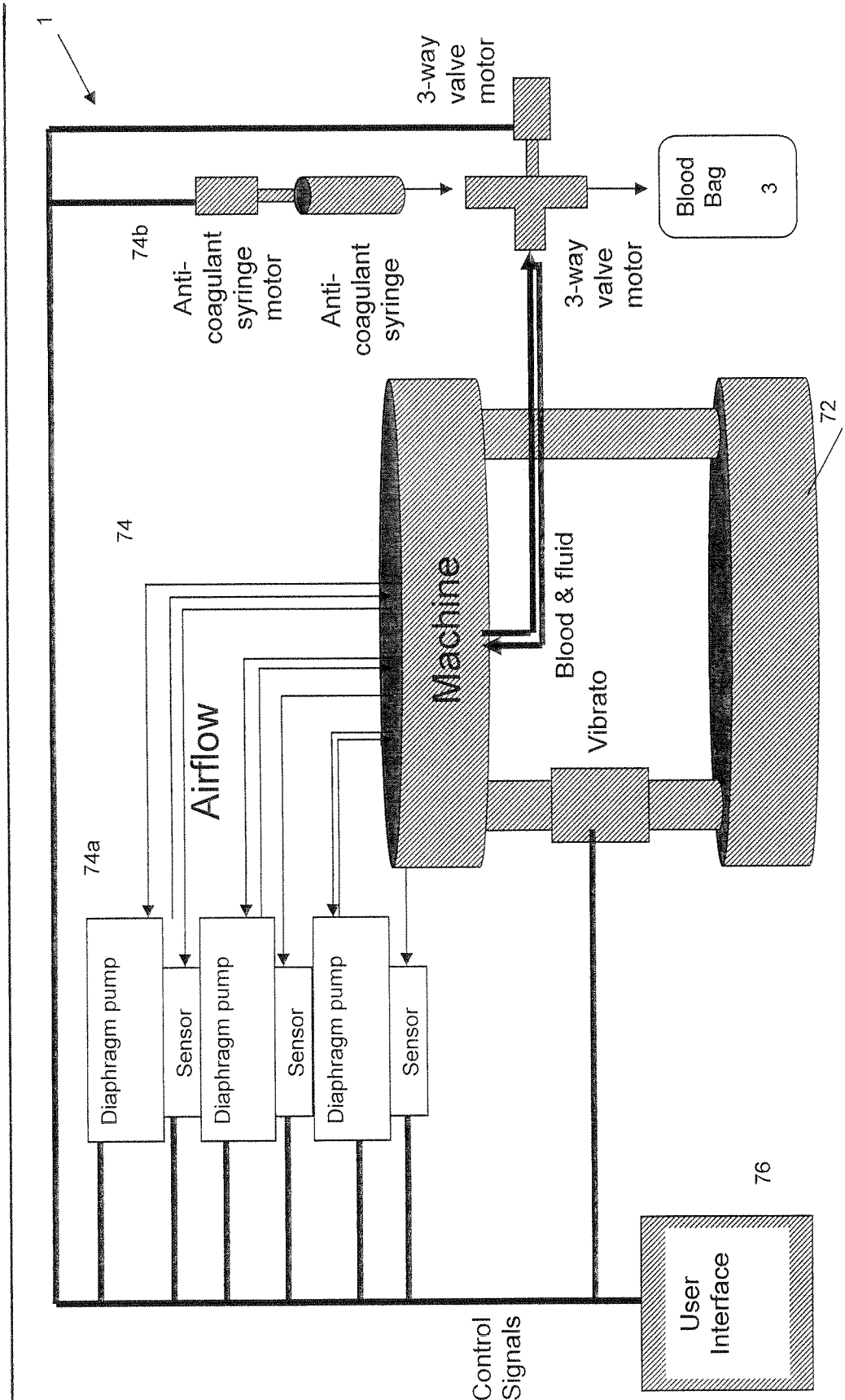
1
3-way valve motor
Blood Bag 3
74b
Anti-coagulant syringe motor
Anti-coagulant syringe
3-way valve motor
72
74
Machine
Blood & fluid
Vibrato
Airflow
74a
Diaphragm pump
Sensor
Diaphragm pump
Sensor
Diaphragm pump
Sensor
76
User Interface
Control Signals

Fig. 7

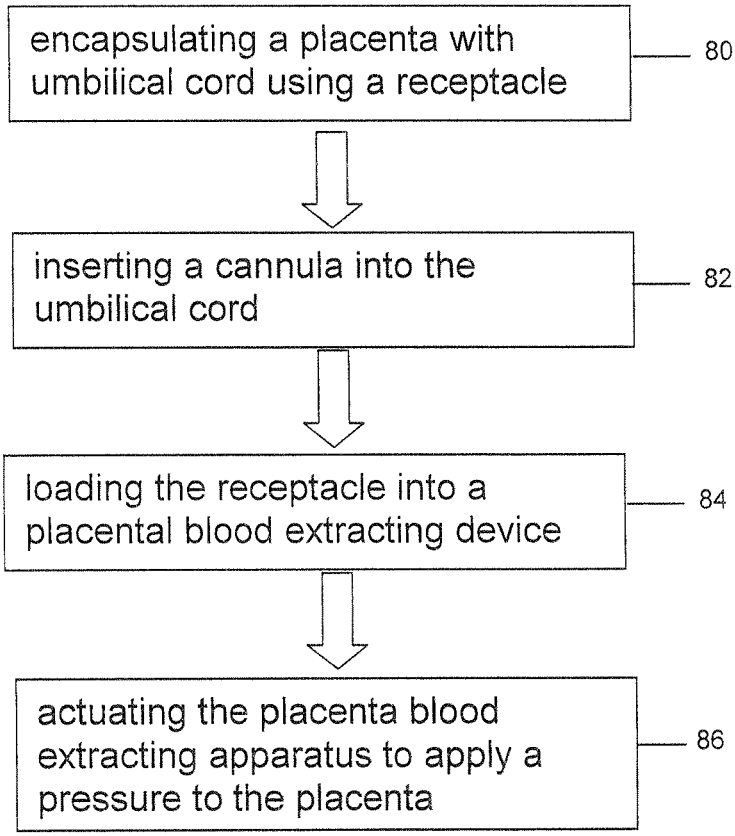
encapsulating a placenta with umbilical cord using a receptacle
80
inserting a cannula into the umbilical cord
82
loading the receptacle into a placental blood extracting device
84
actuating the placenta blood extracting apparatus to apply a pressure to the placenta
86

Fig. 8