Fig.1

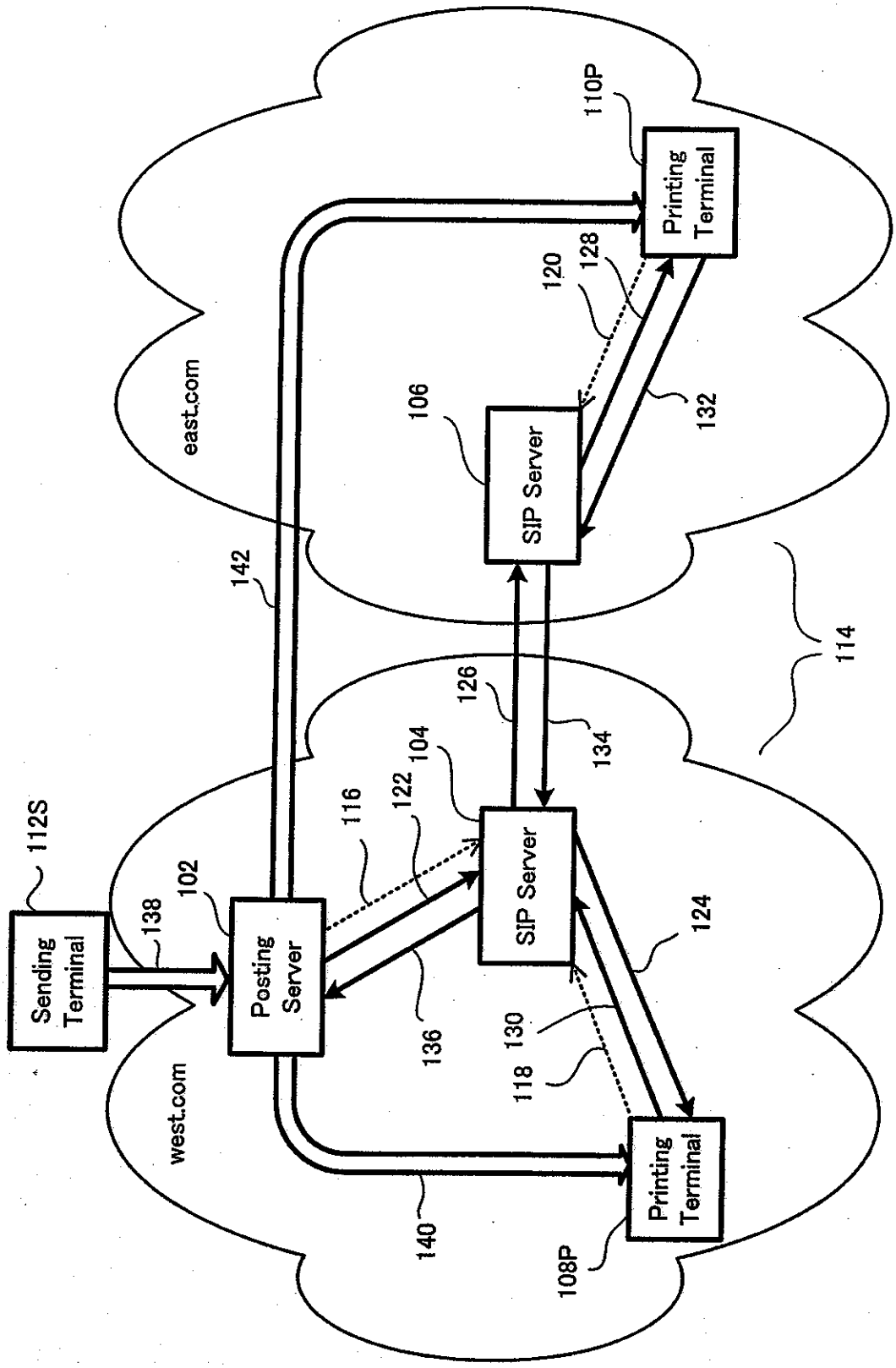
east.com
west.com
Sending Terminal
Posting Server
SIP Server
SIP Server
Printing Terminal
Printing Terminal
112S
102
138
116
122
104
106
120
128
110P
132
142
114
126
134
124
136
130
118
140
108P

Fig.2

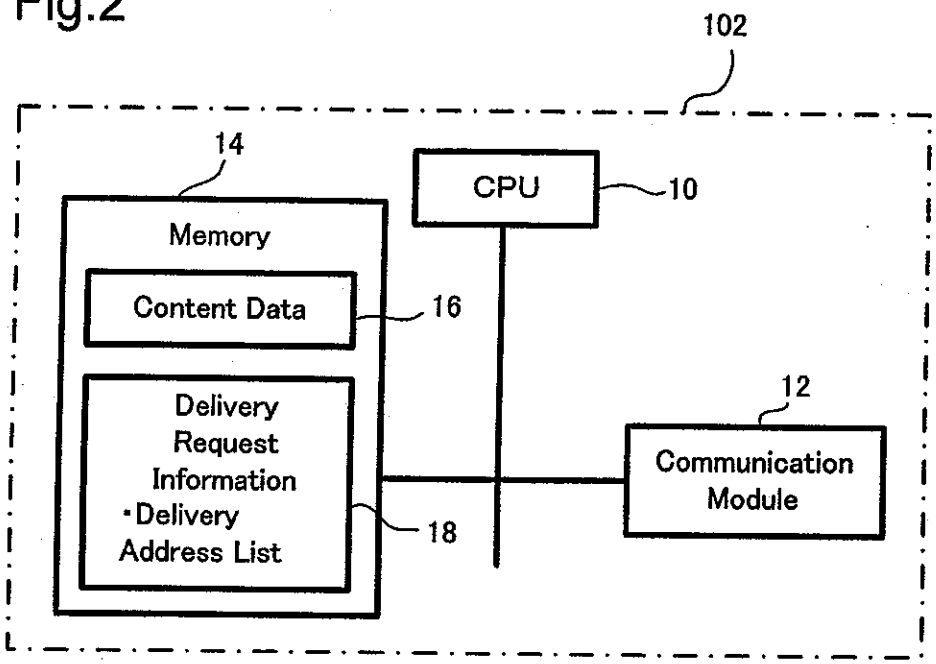
102
14
CPU
10
Memory
Content Data
16
Delivery Request Information
・Delivery Address List
18
12
Communication Module

Fig.3

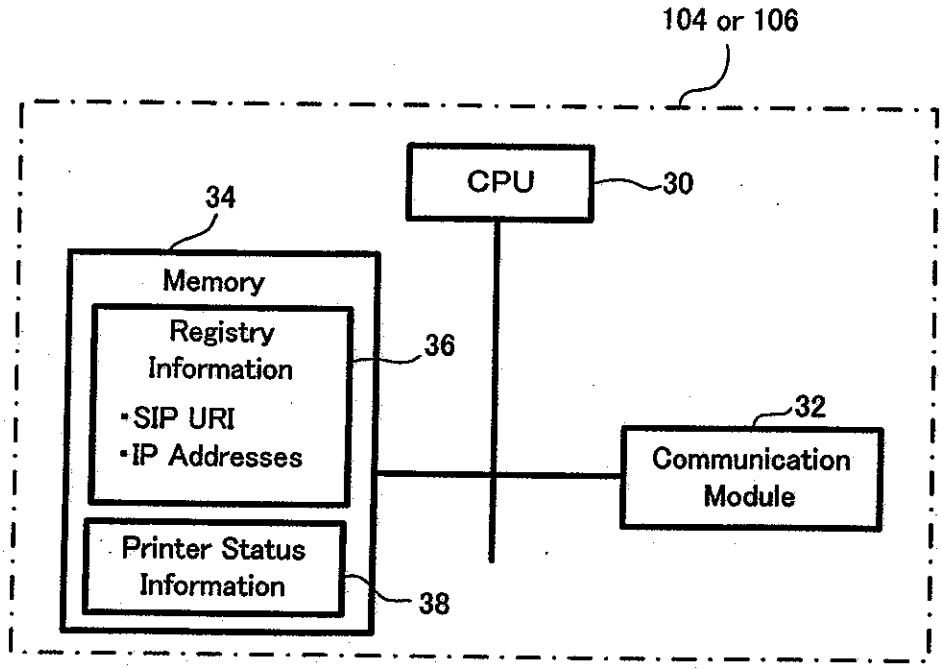
104 or 106
CPU
30
34
Memory
Registry Information
・SIP URI
・IP Addresses
36
32
Communication Module
Printer Status Information
38

Fig.4

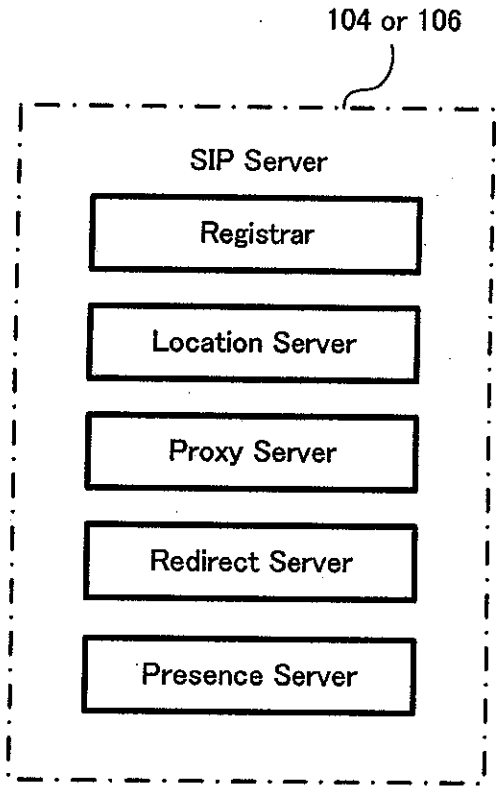
104 or 106
SIP Server
Registrar
Location Server
Proxy Server
Redirect Server
Presence Server

Fig.5

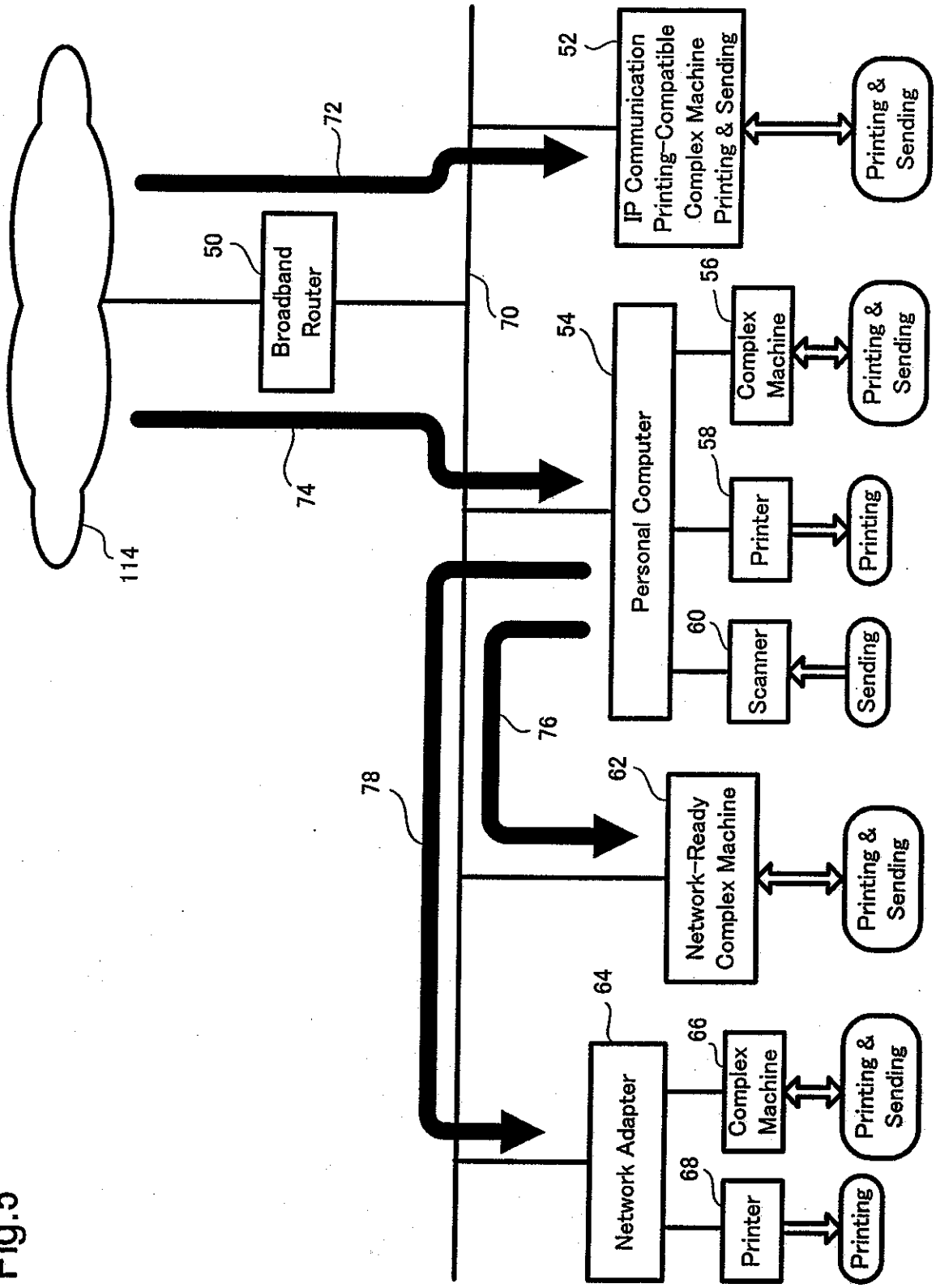
114
Broadband Router
50
70
72
74
52
IP Communication Printing-Compatible Complex Machine Printing & Sending
Printing & Sending
54
Personal Computer
56
Complex Machine
Printing & Sending
58
Printer
Printing
60
Scanner
Sending
76
78
62
Network-Ready Complex Machine
Printing & Sending
64
Network Adapter
66
Complex Machine
Printing & Sending
68
Printer
Printing

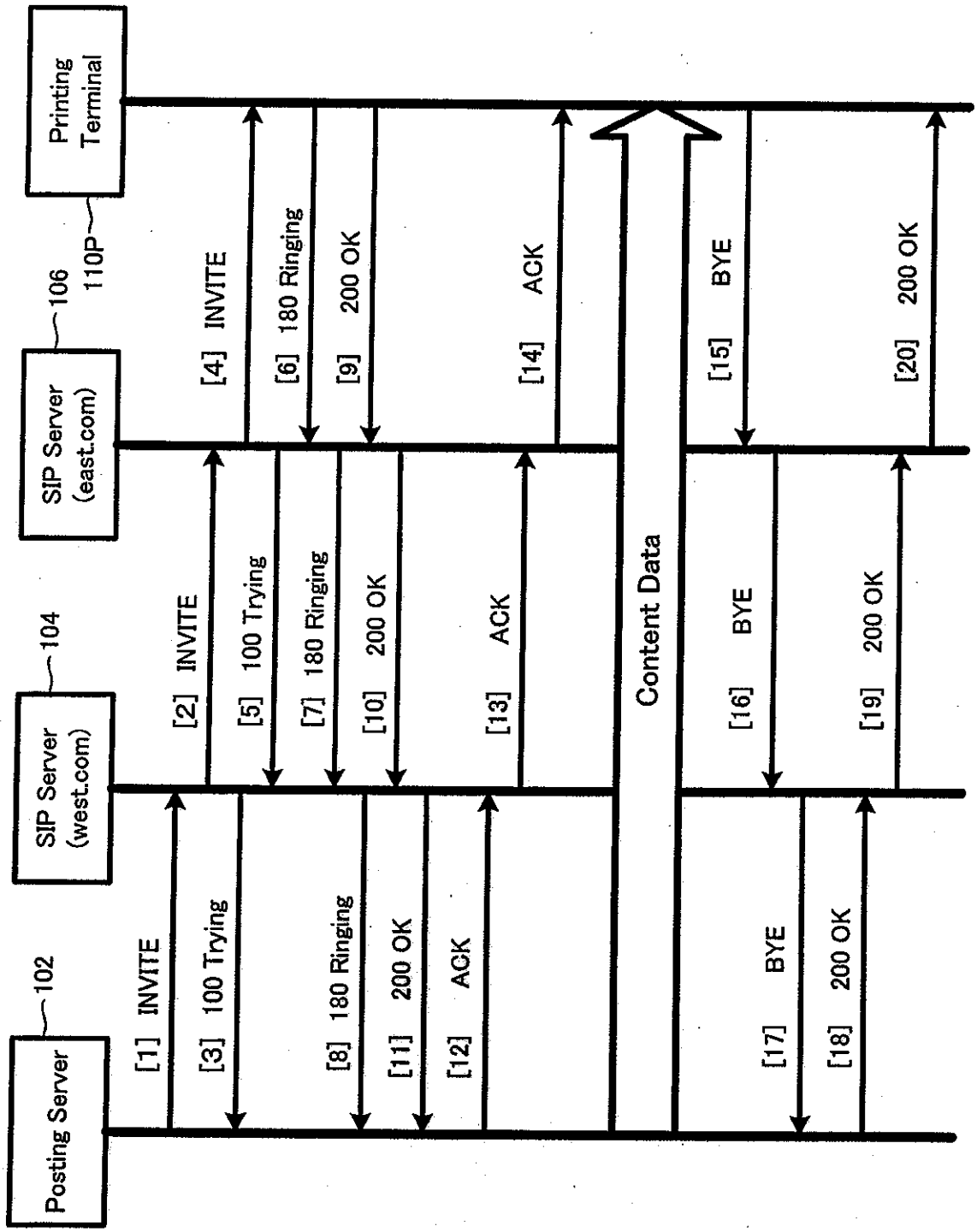
Posting Server
102
SIP Server (west.com)
104
SIP Server (east.com)
106
Printing Terminal
110P
[1] INVITE
[2] INVITE
[3] 100 Trying
[4] INVITE
[5] 100 Trying
[6] 180 Ringing
[7] 180 Ringing
[8] 180 Ringing
[9] 200 OK
[10] 200 OK
[11] 200 OK
[12] ACK
[13] ACK
[14] ACK
Content Data
[15] BYE
[16] BYE
[17] BYE
[18] 200 OK
[19] 200 OK
[20] 200 OK

Fig.6

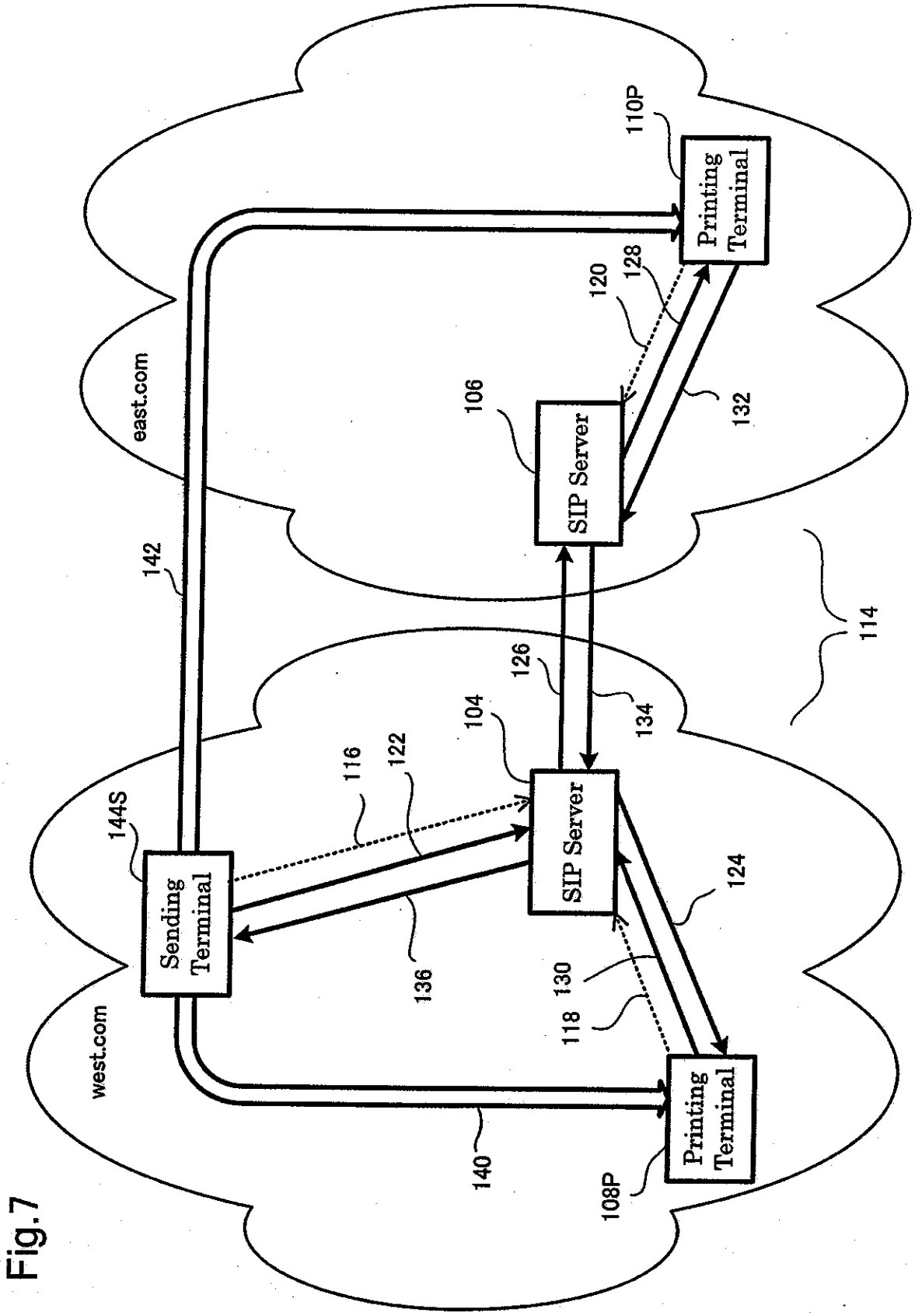
east.com
west.com
Printing Terminal
SIP Server
SIP Server
Sending Terminal
Printing Terminal
110P
106
104
144S
108P
114
116
118
120
122
124
126
128
130
132
134
136
140
142

Fig.7

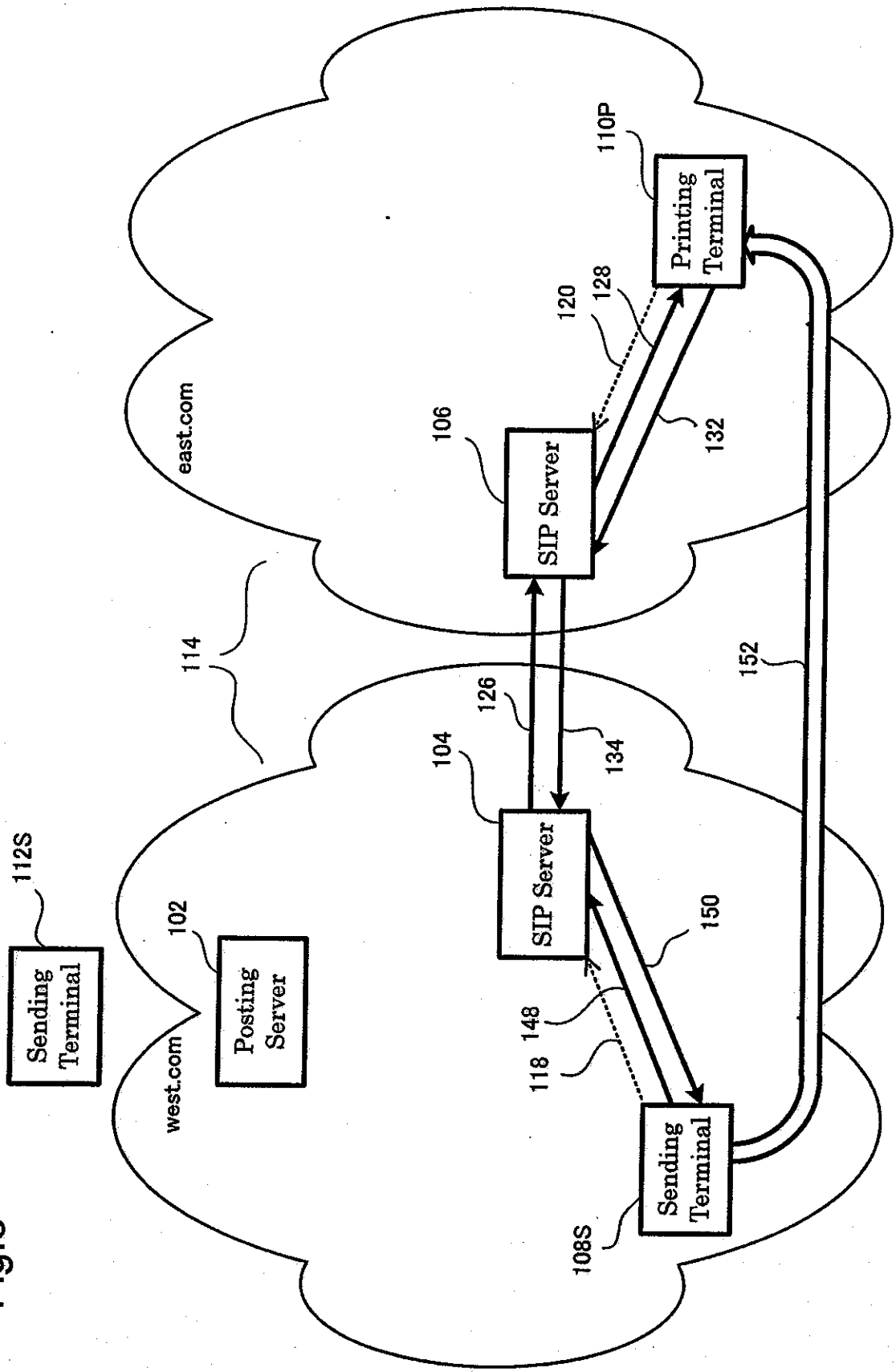
112S
Sending Terminal
102
Posting Server
west.com
114
east.com
106
SIP Server
104
SIP Server
110P
Printing Terminal
120
128
132
126
134
148
118
150
152
108S
Sending Terminal

Fig.8

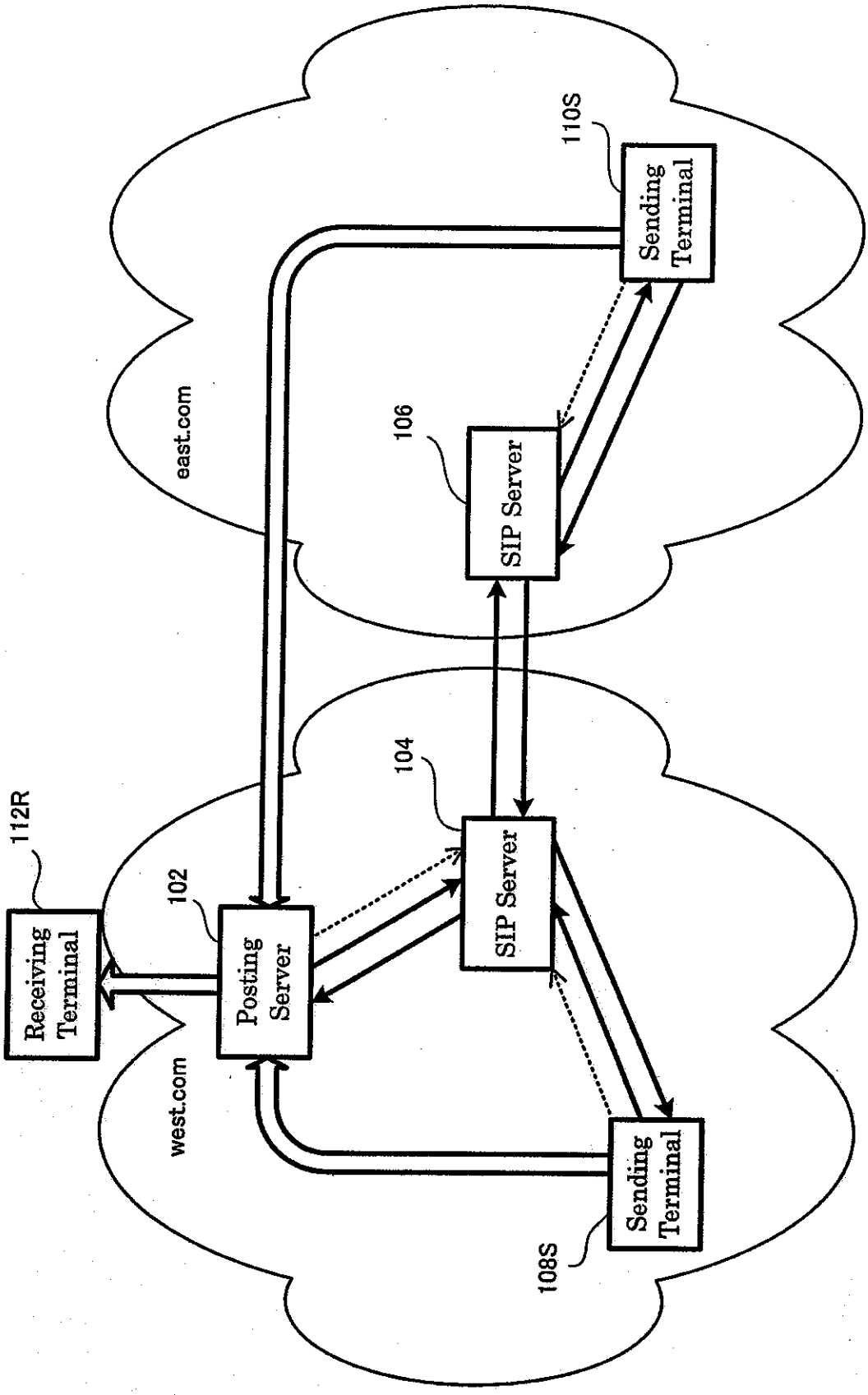
east.com
west.com
Receiving Terminal
112R
Posting Server
102
SIP Server
104
SIP Server
106
Sending Terminal
110S
Sending Terminal
108S

Fig.9

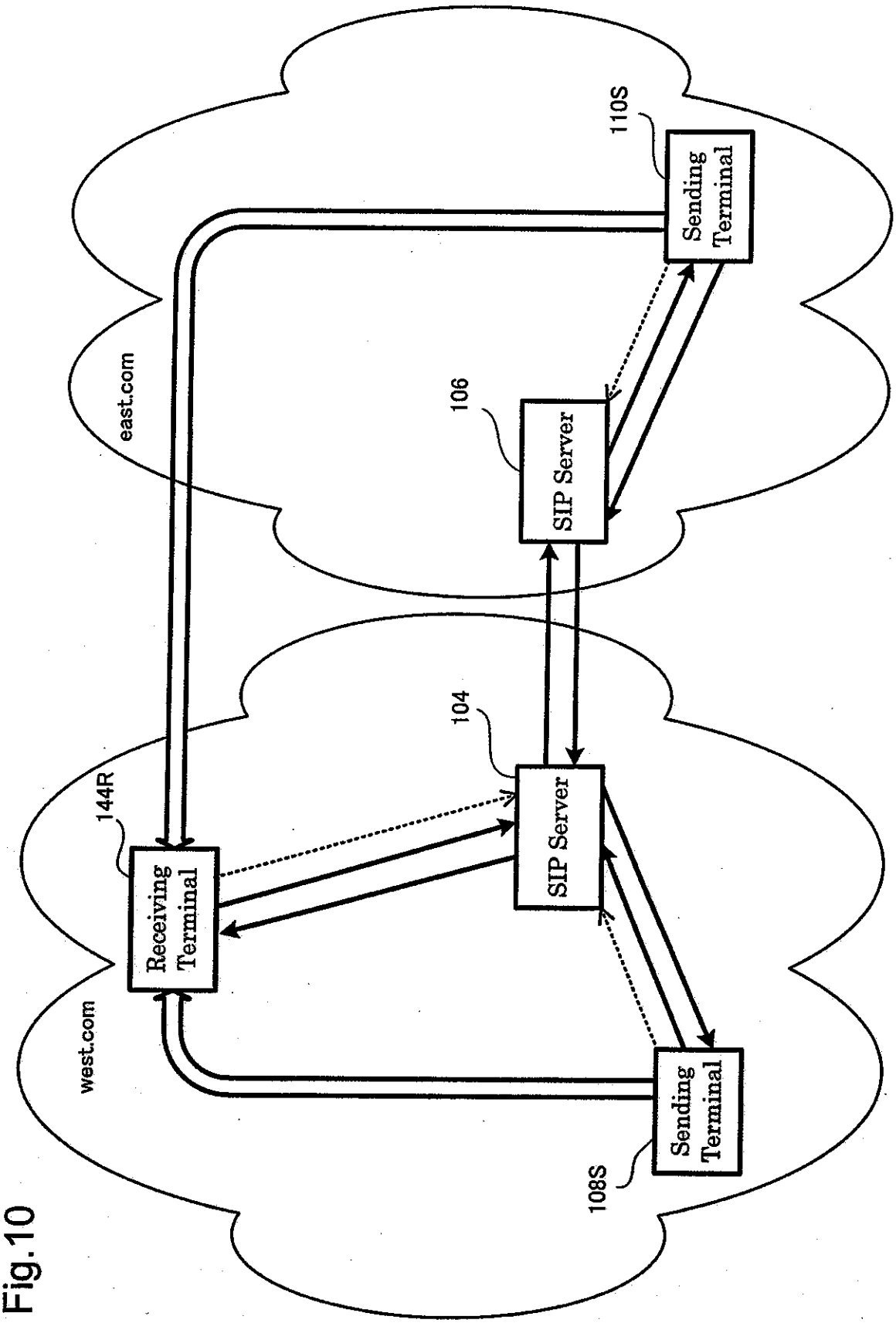
east.com
110S
Sending Terminal
106
SIP Server
104
SIP Server
144R
Receiving Terminal
west.com
Sending Terminal
108S

Fig.10

Fig.11

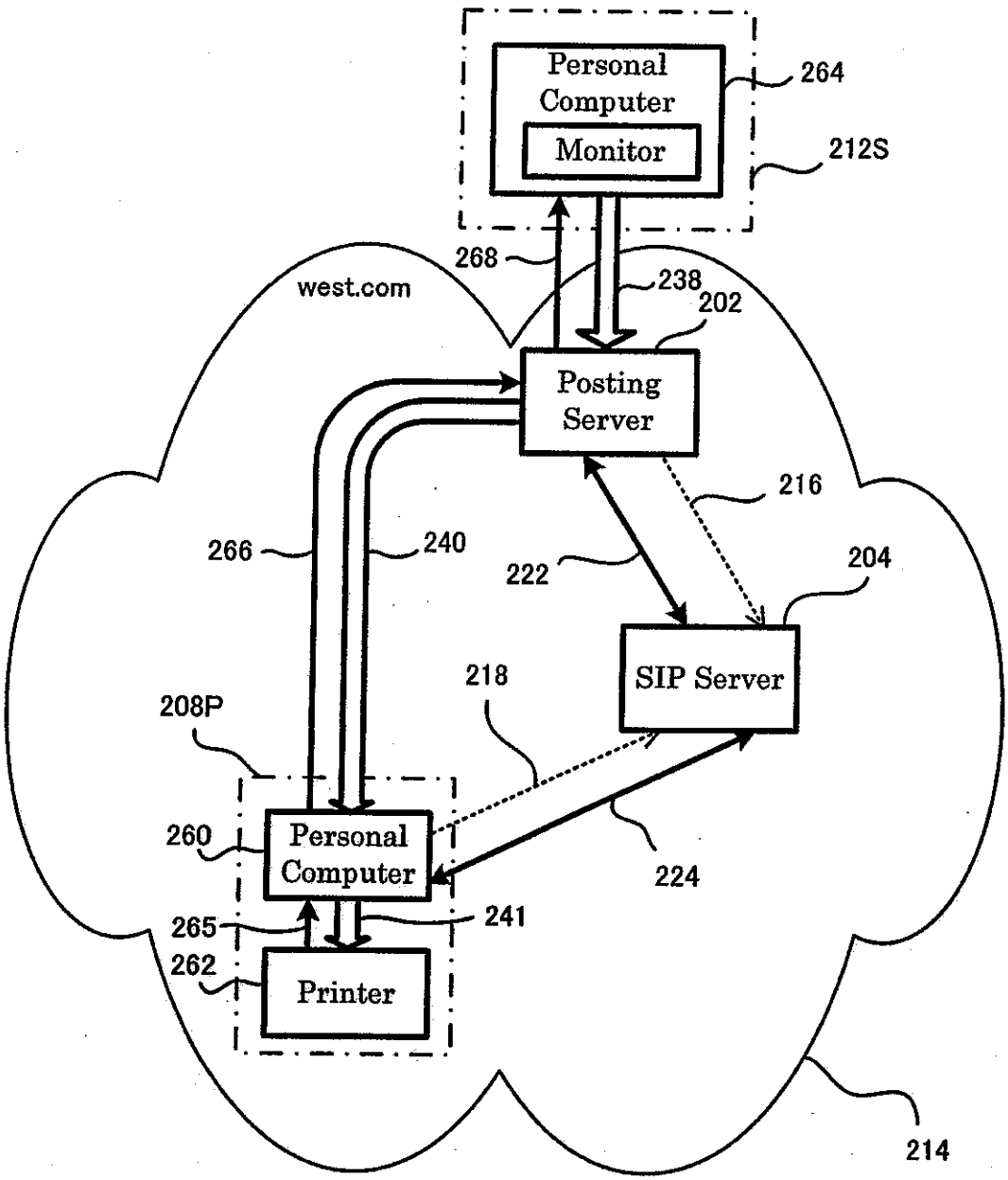
Personal Computer
Monitor
264
212S
268
238
202
west.com
Posting Server
216
266
240
222
204
SIP Server
218
208P
260
Personal Computer
224
265
241
262
Printer
214

Fig.12

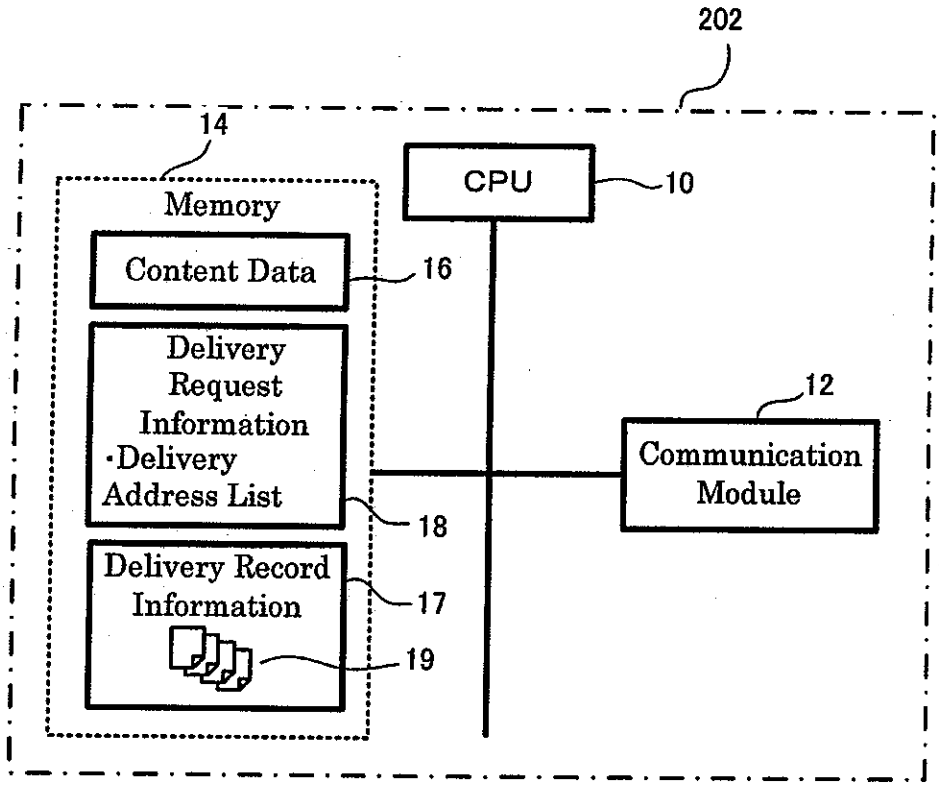
202
14
Memory
CPU
10
Content Data
16
Delivery Request Information ·Delivery Address List
18
12
Communication Module
Delivery Record Information
17
19

Fig.13

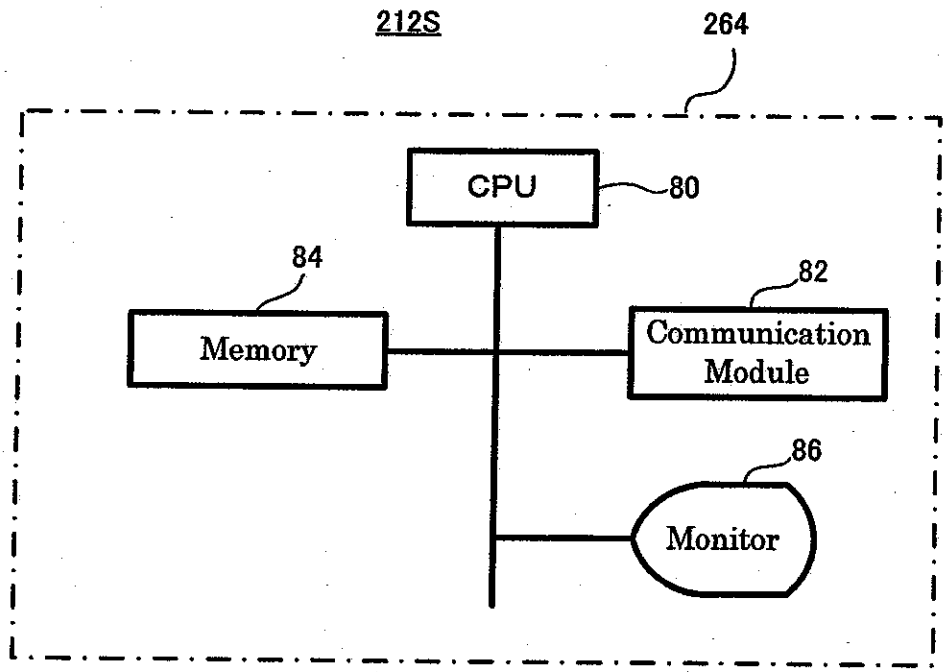
212S
264
CPU
80
84
Memory
82
Communication Module
86
Monitor

Fig.14

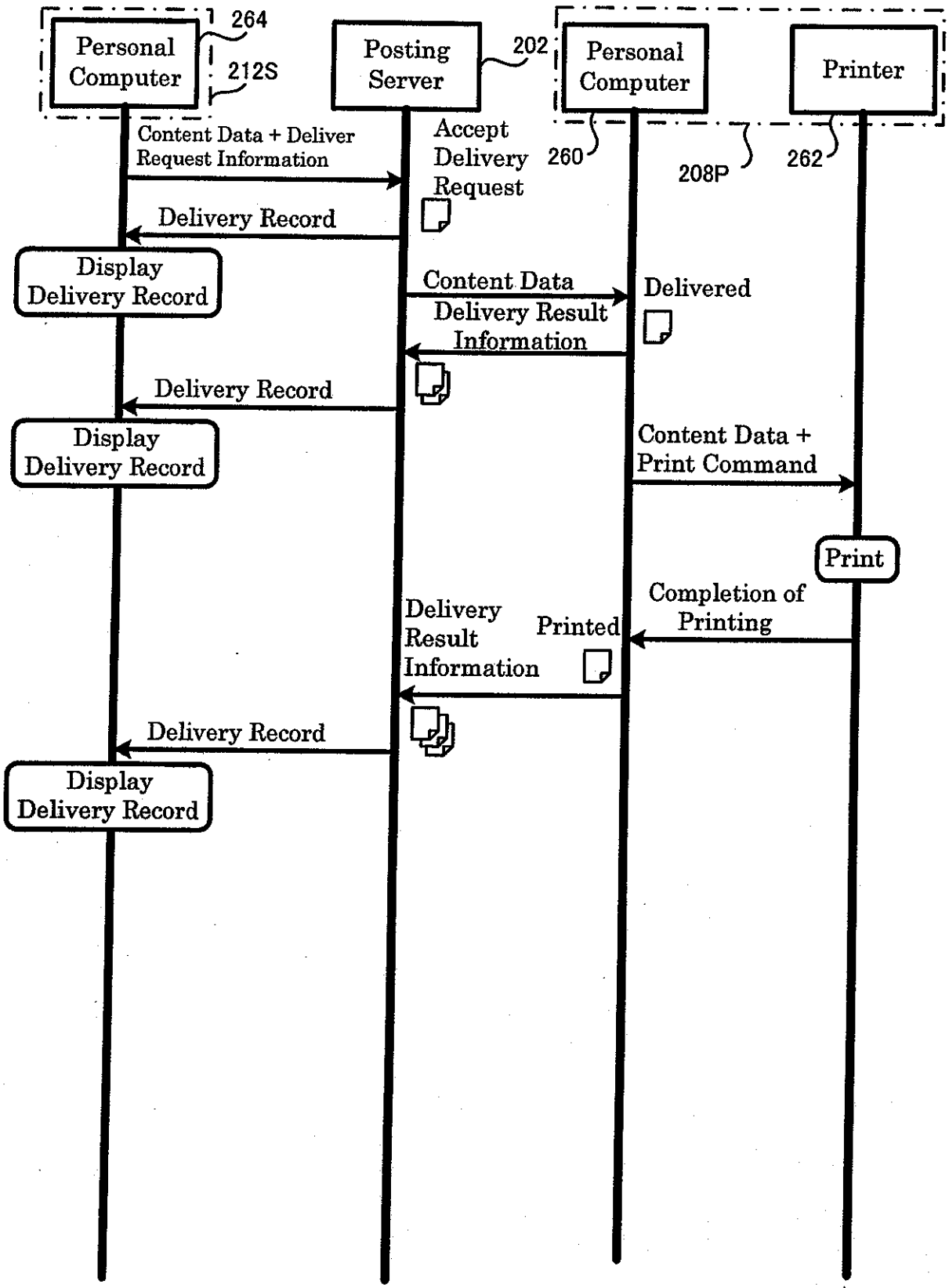
Personal Computer
264
212S
Posting Server
202
Personal Computer
Printer
Content Data + Deliver Request Information
Accept Delivery Request
260
208P
262
Delivery Record
Display Delivery Record
Content Data
Delivered
Delivery Result Information
Delivery Record
Display Delivery Record
Content Data + Print Command
Print
Completion of Printing
Delivery Result Information
Printed
Delivery Record
Display Delivery Record

Fig.15

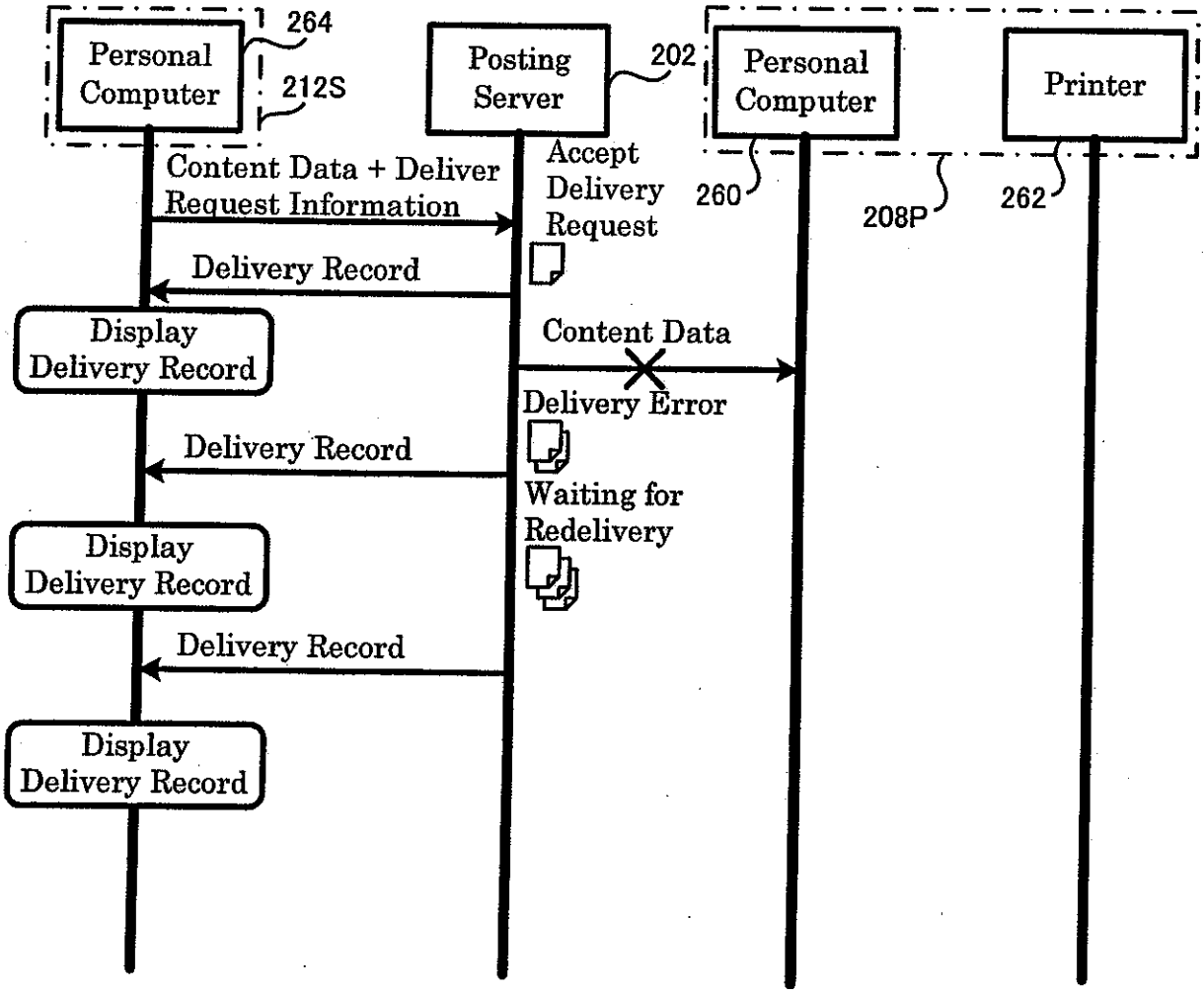
Personal Computer
264
212S
Posting Server
202
Personal Computer
Printer
Content Data + Deliver Request Information
Accept Delivery Request
260
208P
262
Delivery Record
Display Delivery Record
Content Data
Delivery Error
Delivery Record
Waiting for Redelivery
Display Delivery Record
Delivery Record
Display Delivery Record

Fig.16

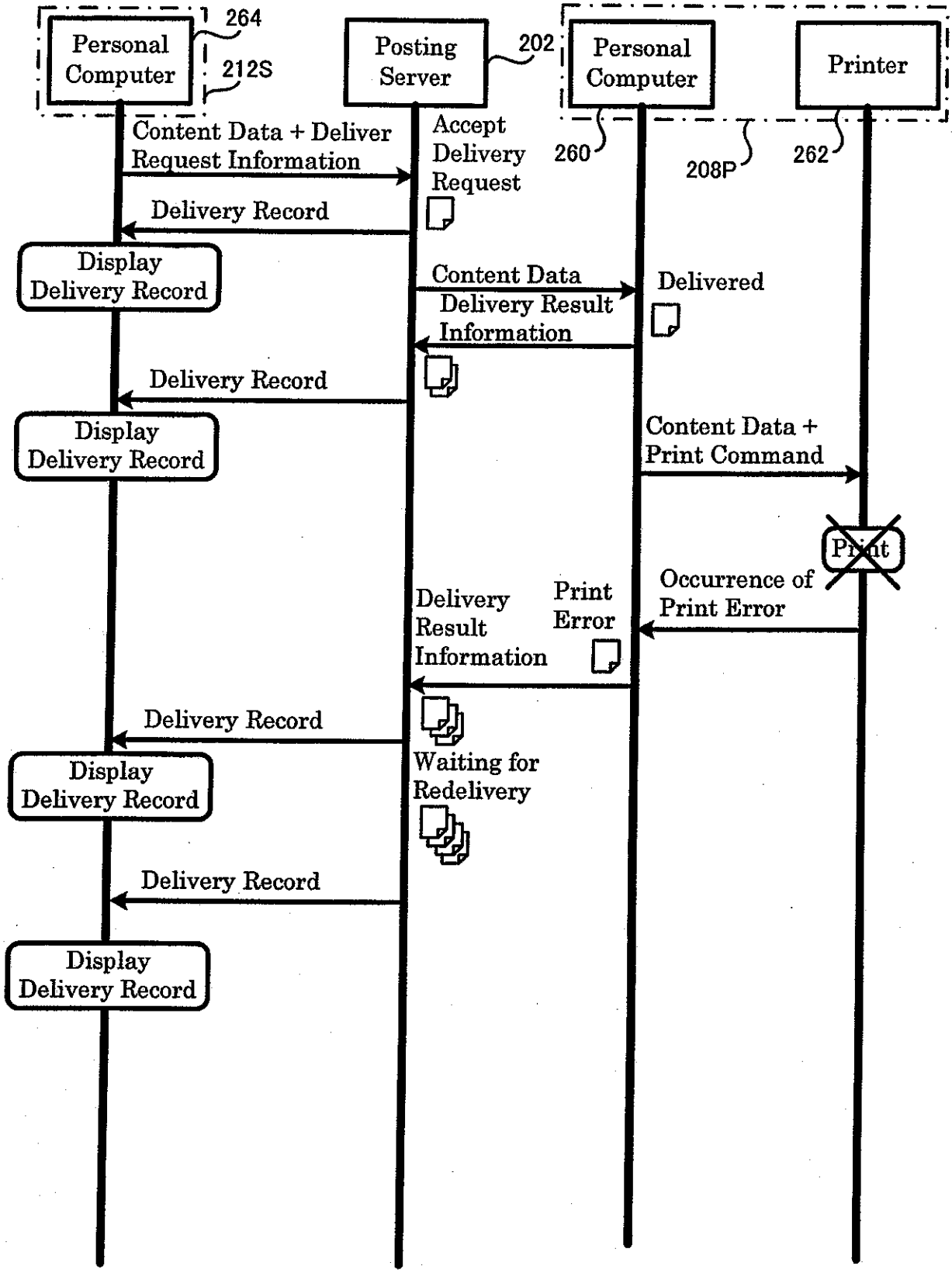
Personal Computer
264
212S
Posting Server
202
Personal Computer
Printer
260
208P
262
Content Data + Deliver Request Information
Accept Delivery Request
Delivery Record
Display Delivery Record
Content Data
Delivered
Delivery Result Information
Delivery Record
Display Delivery Record
Content Data + Print Command
Print
Occurrence of Print Error
Delivery Result Information
Print Error
Delivery Record
Waiting for Redelivery
Display Delivery Record
Delivery Record
Display Delivery Record

Fig.17

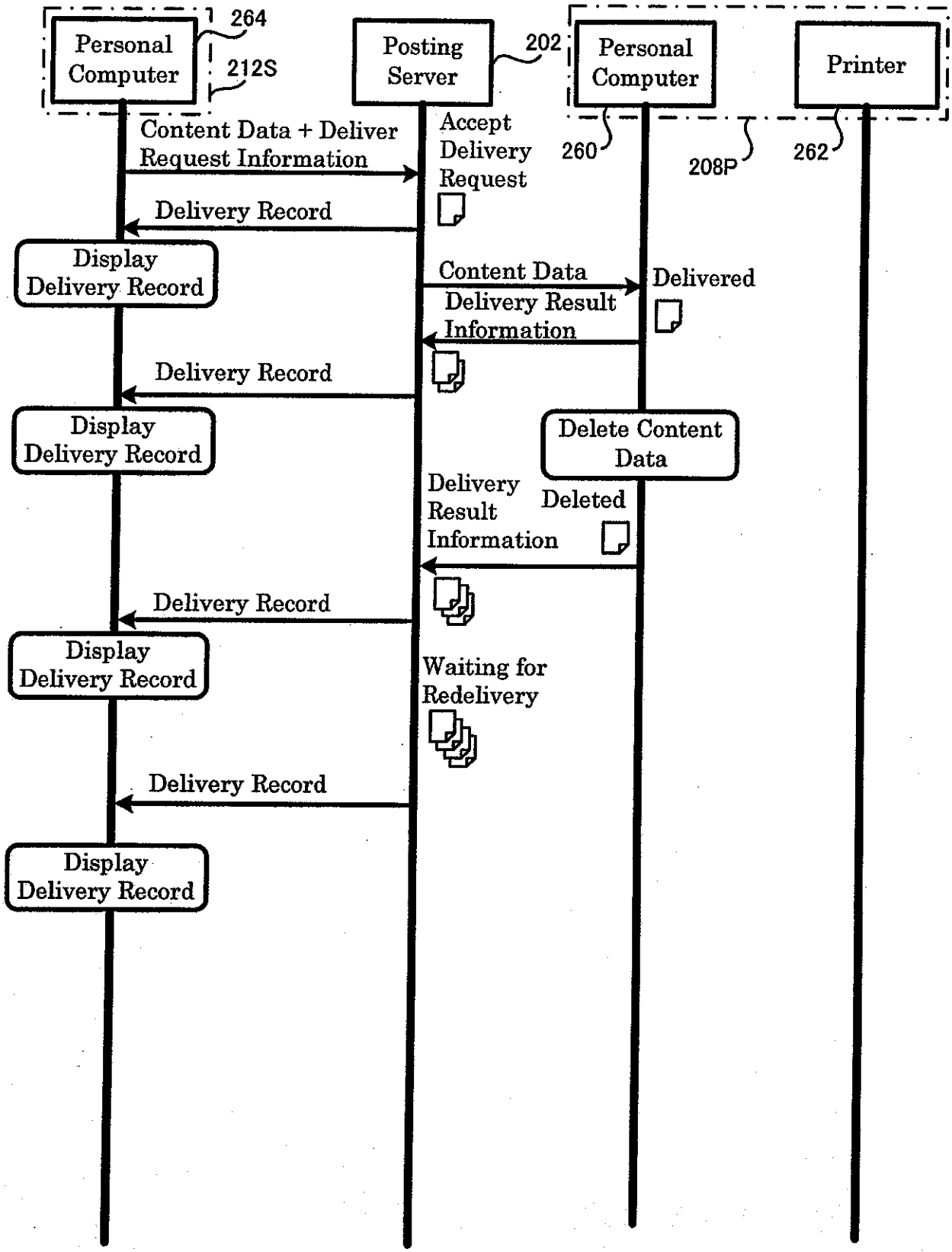
Personal Computer
264
212S
Posting Server
202
Personal Computer
260
208P
Printer
262
Content Data + Deliver Request Information
Accept Delivery Request
Delivery Record
Display Delivery Record
Content Data
Delivered
Delivery Result Information
Delivery Record
Display Delivery Record
Delete Content Data
Delivery Result Information
Deleted
Delivery Record
Display Delivery Record
Waiting for Redelivery
Delivery Record
Display Delivery Record

Fig.18

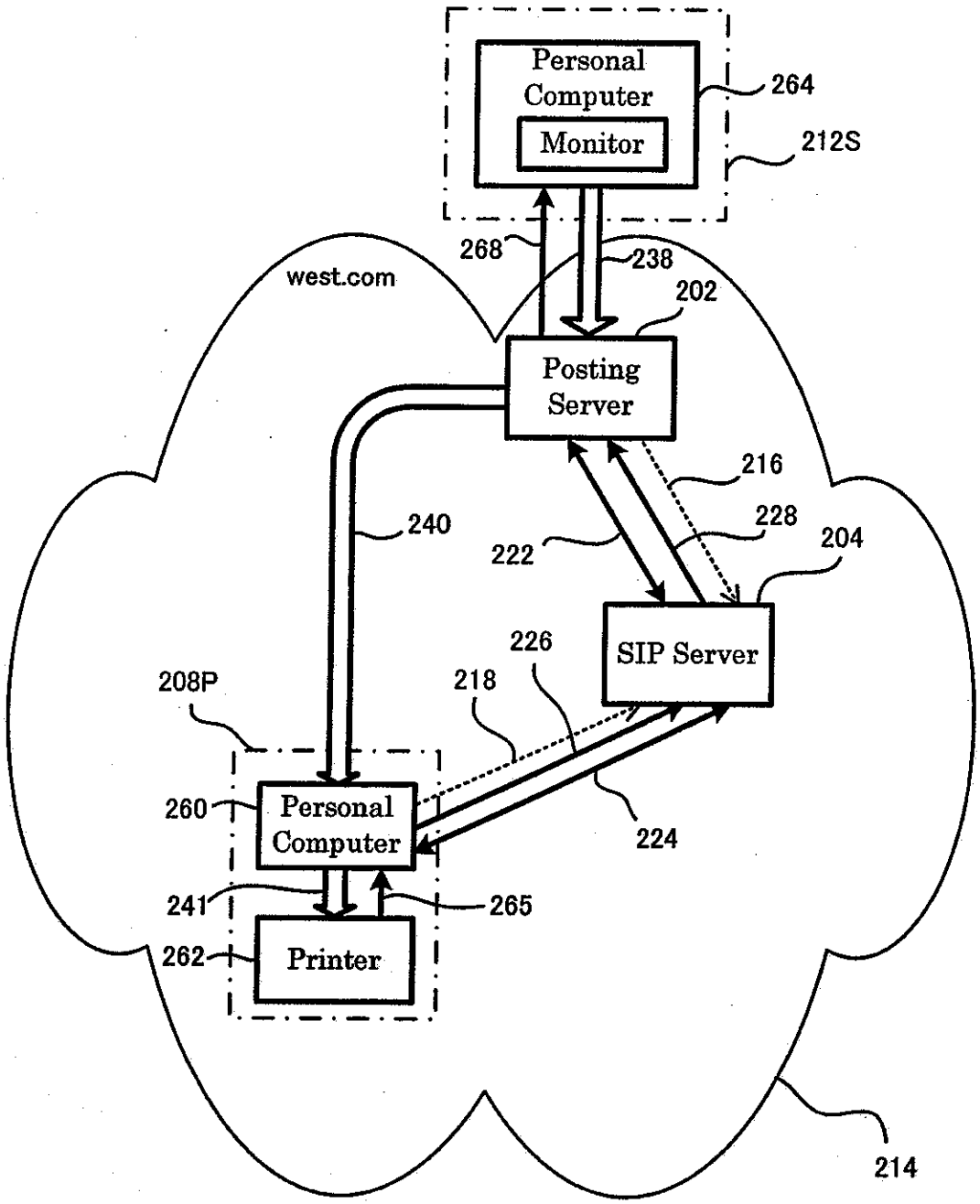
Personal Computer
Monitor
264
212S
268
238
west.com
202
Posting Server
216
240
228
222
204
SIP Server
226
208P
218
260
Personal Computer
224
241
265
262
Printer
214

Fig.19

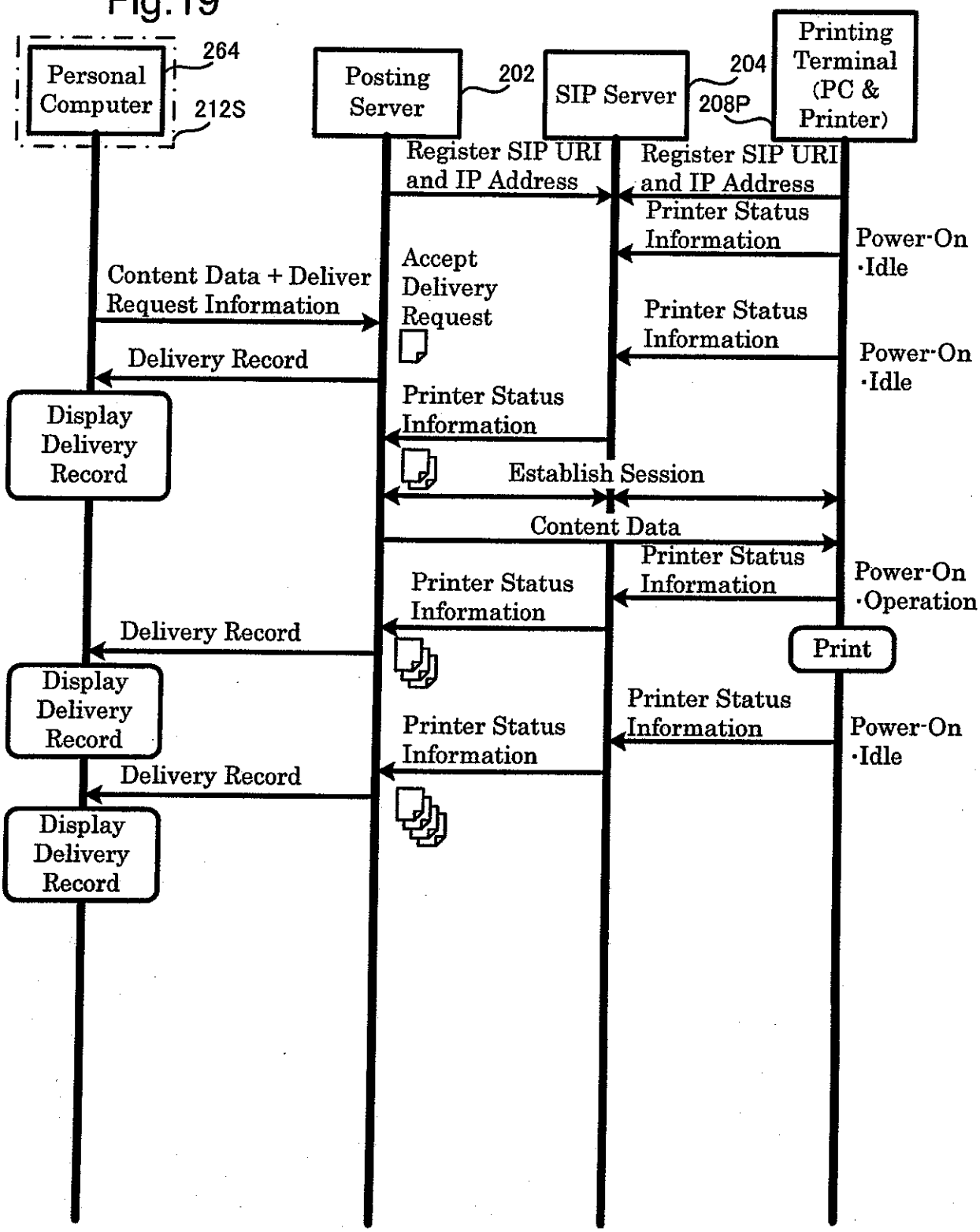
Personal Computer
264
212S
Posting Server
202
SIP Server
204
208P
Printing Terminal (PC & Printer)
Register SIP URI and IP Address
Register SIP URI and IP Address
Printer Status Information
Power-On ·Idle
Content Data + Deliver Request Information
Accept Delivery Request
Printer Status Information
Power-On ·Idle
Delivery Record
Printer Status Information
Display Delivery Record
Establish Session
Content Data
Printer Status Information
Power-On ·Operation
Printer Status Information
Delivery Record
Print
Display Delivery Record
Printer Status Information
Power-On ·Idle
Printer Status Information
Delivery Record
Display Delivery Record

Fig.20

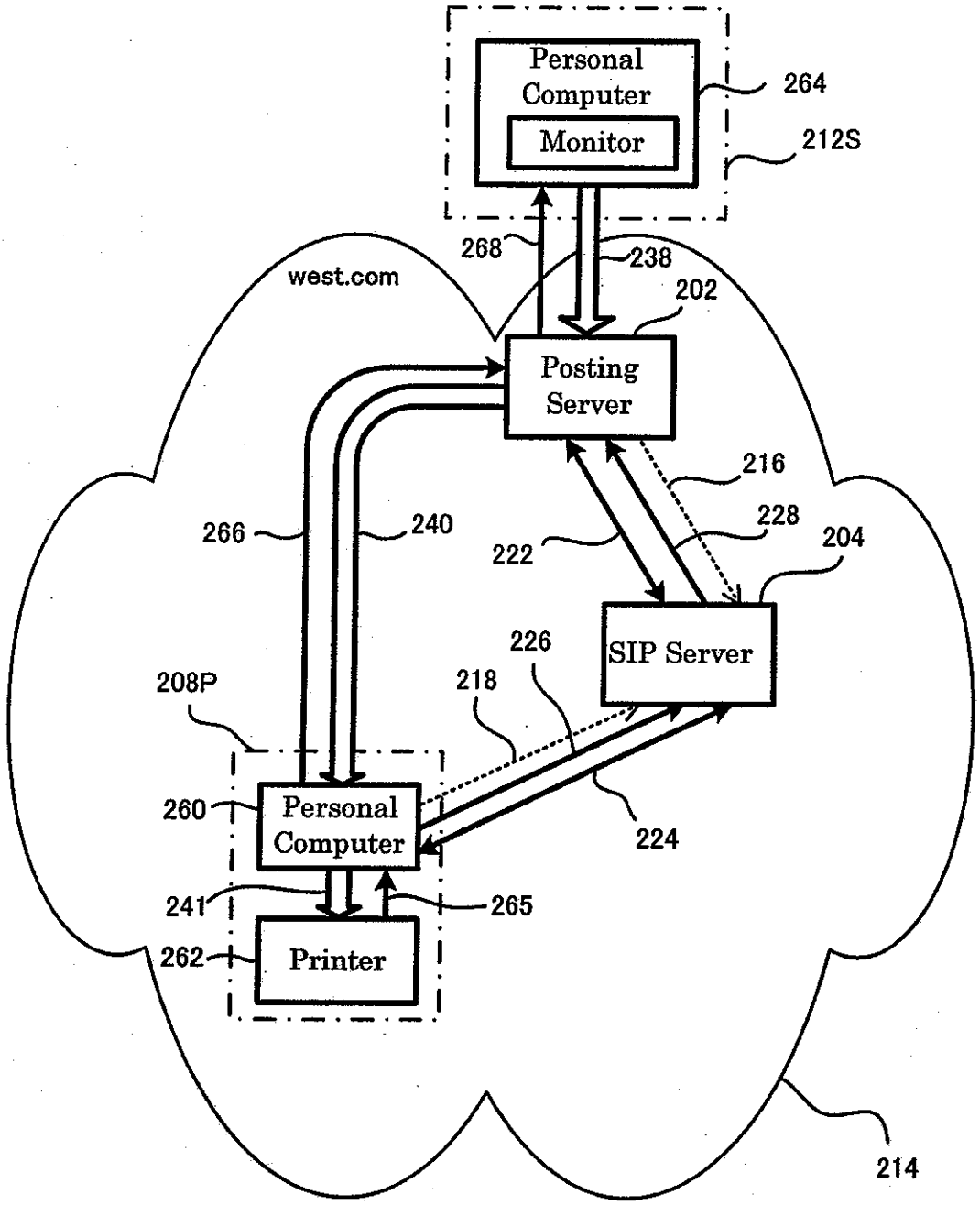
Personal Computer
Monitor
264
212S
268
238
west.com
202
Posting Server
216
266
240
222
228
204
SIP Server
226
208P
218
260
Personal Computer
224
241
265
262
Printer
214

Fig.21

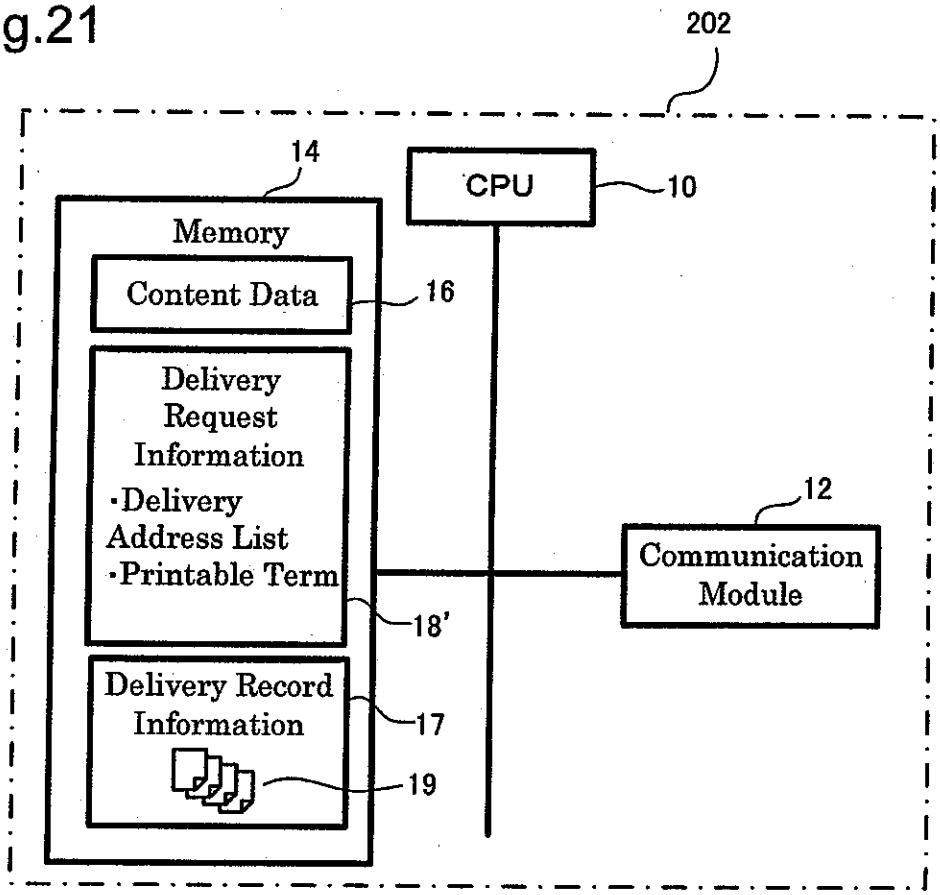
202
14
CPU
10
Memory
Content Data
16
Delivery Request Information
·Delivery Address List
·Printable Term
18'
12
Communication Module
Delivery Record Information
17
19

Fig.22

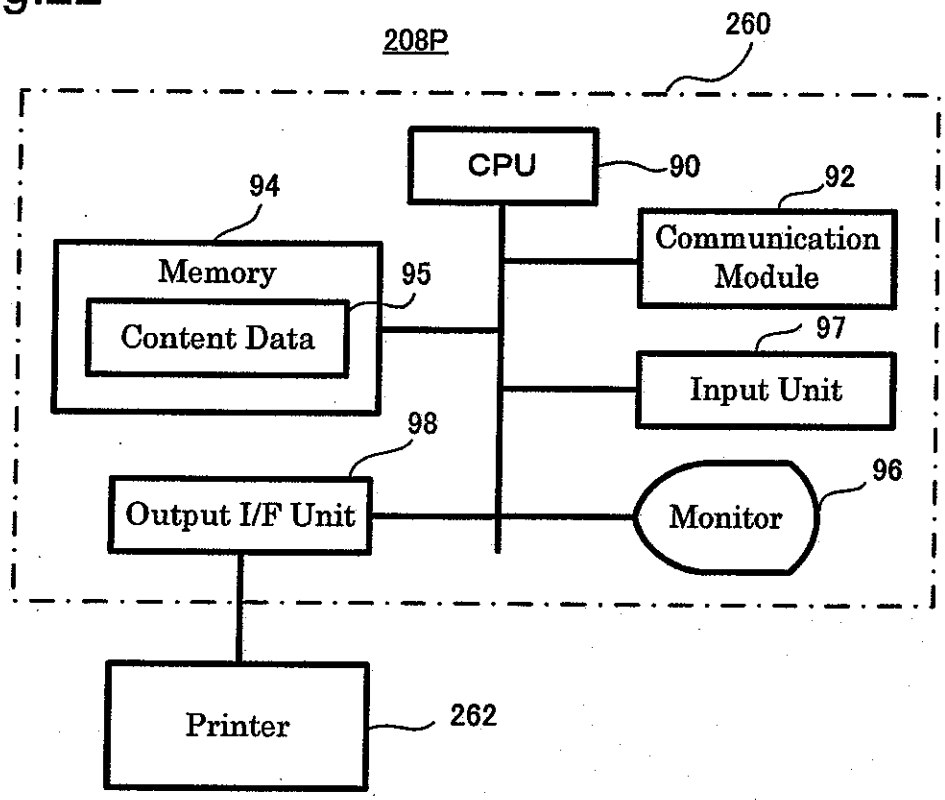
208P
260
CPU
90
94
92
Communication Module
Memory
95
Content Data
97
Input Unit
98
96
Output I/F Unit
Monitor
Printer
262

Fig.23

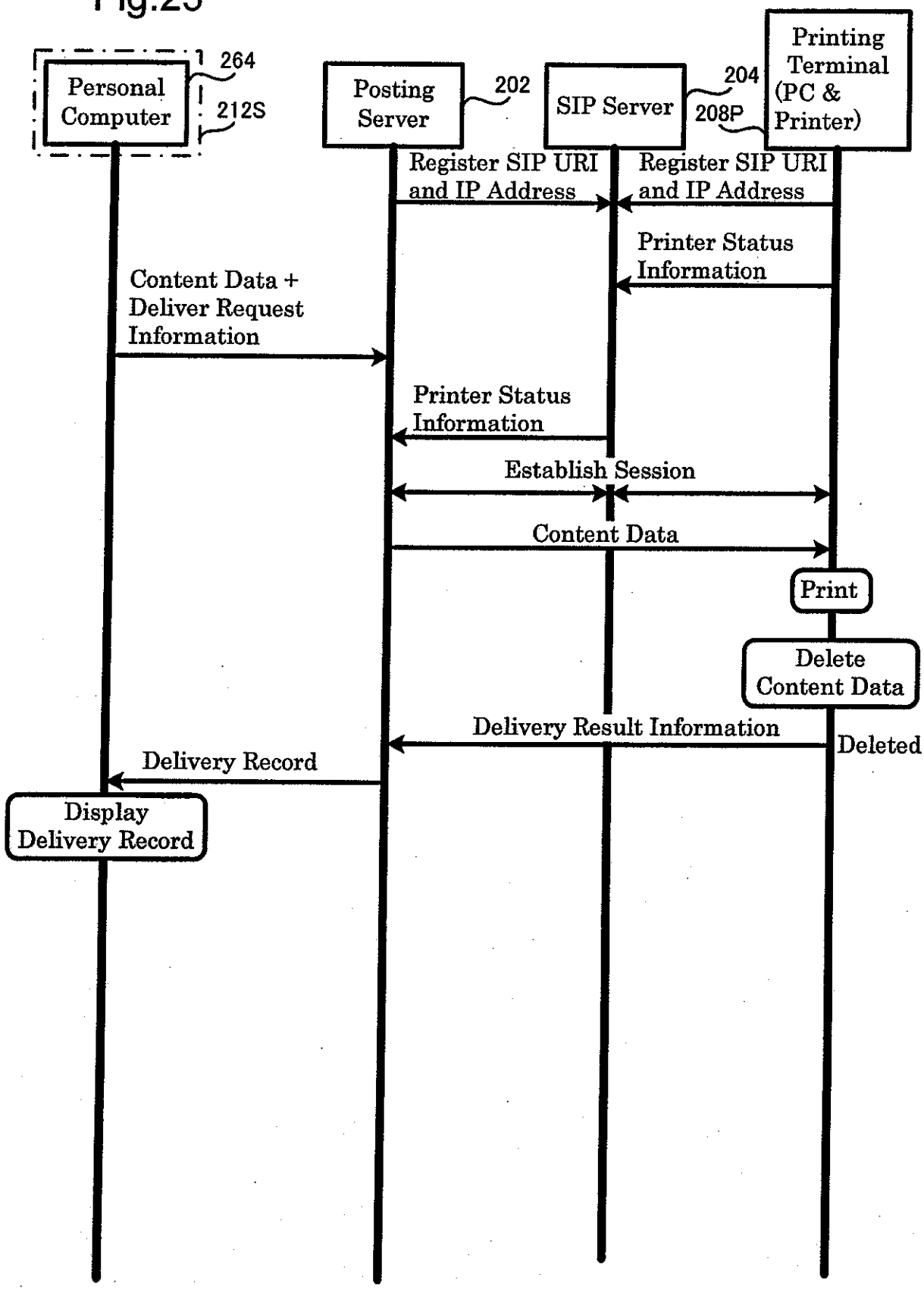
1
264
Personal Computer
212S
Posting Server
202
SIP Server
204
208P
Printing Terminal (PC & Printer)
Register SIP URI and IP Address
Register SIP URI and IP Address
Printer Status Information
Content Data + Deliver Request Information
Printer Status Information
Establish Session
Content Data
Print
Delete Content Data
Delivery Result Information
Deleted
Delivery Record
Display Delivery Record

Fig.24

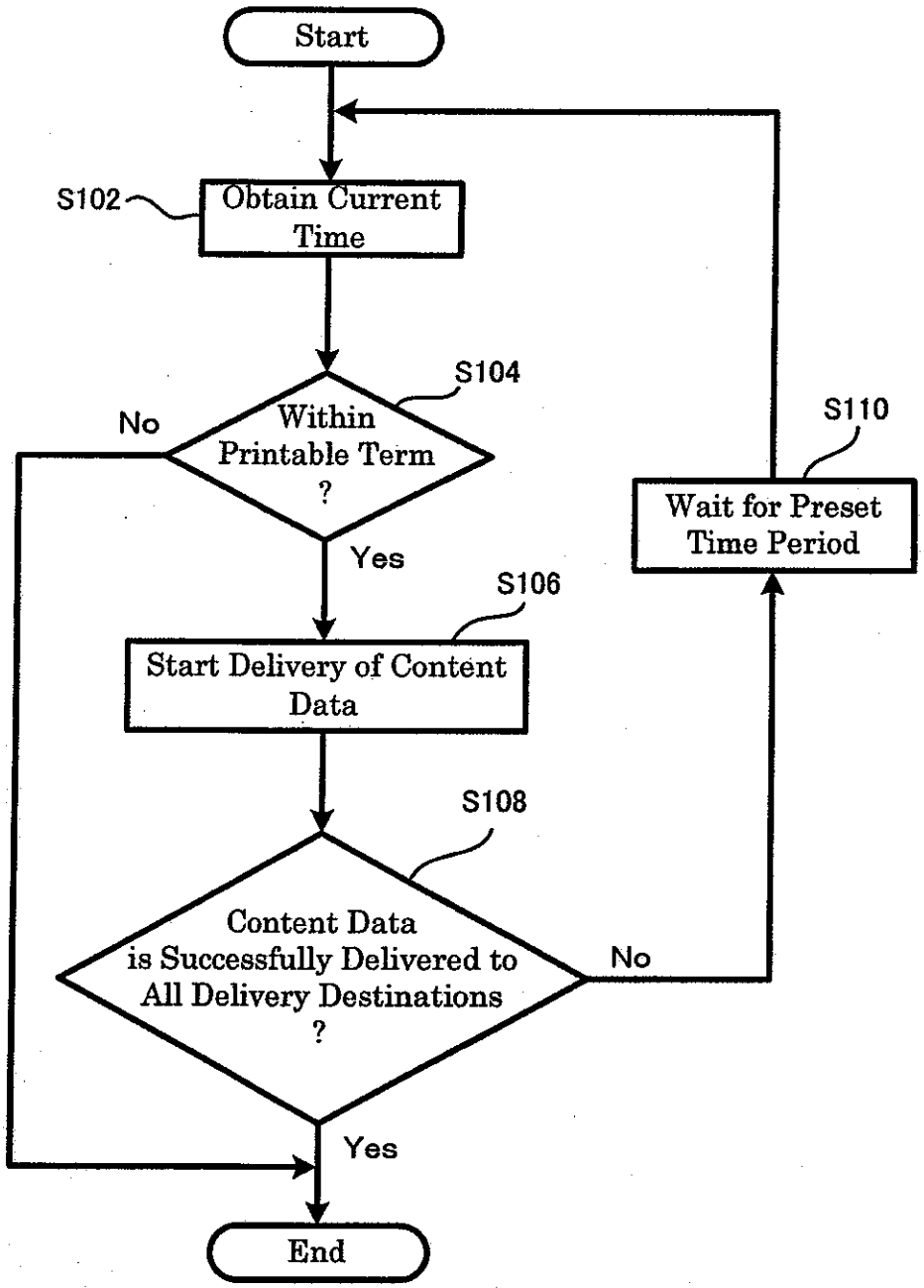
Start
S102
Obtain Current Time
S104
Within Printable Term ?
No
Yes
S106
Start Delivery of Content Data
S108
Content Data is Successfully Delivered to All Delivery Destinations ?
No
Yes
S110
Wait for Preset Time Period
End

Fig.25

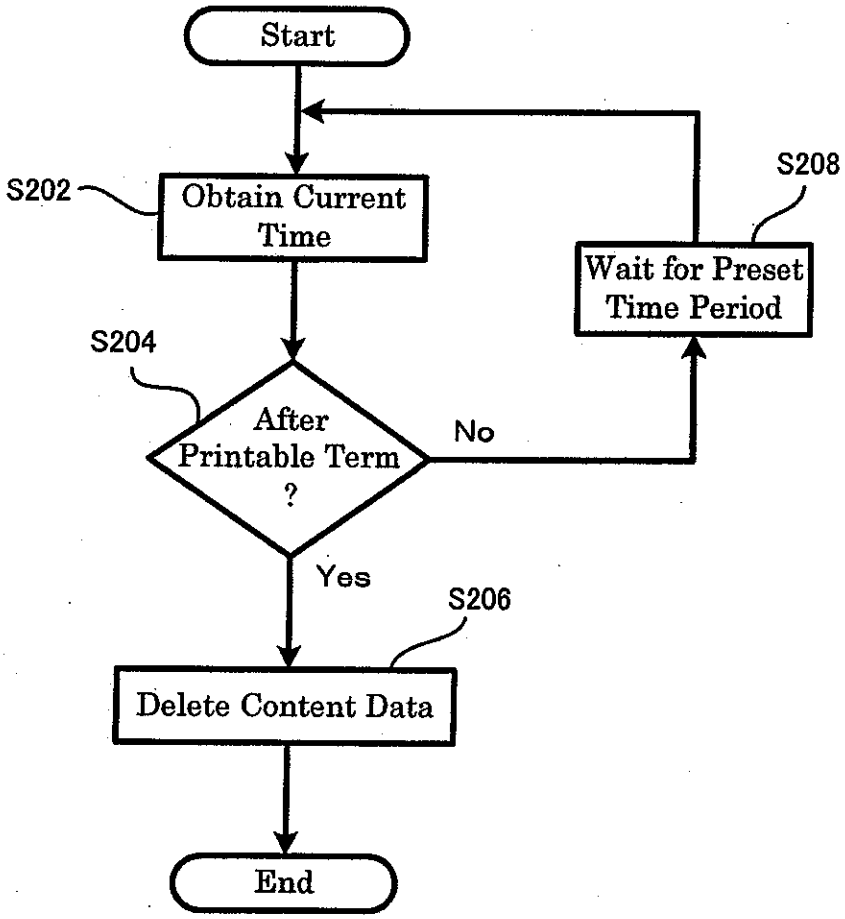
Start
S202
Obtain Current Time
S204
After Printable Term ?
No
S208
Wait for Preset Time Period
Yes
S206
Delete Content Data
End

Fig.26

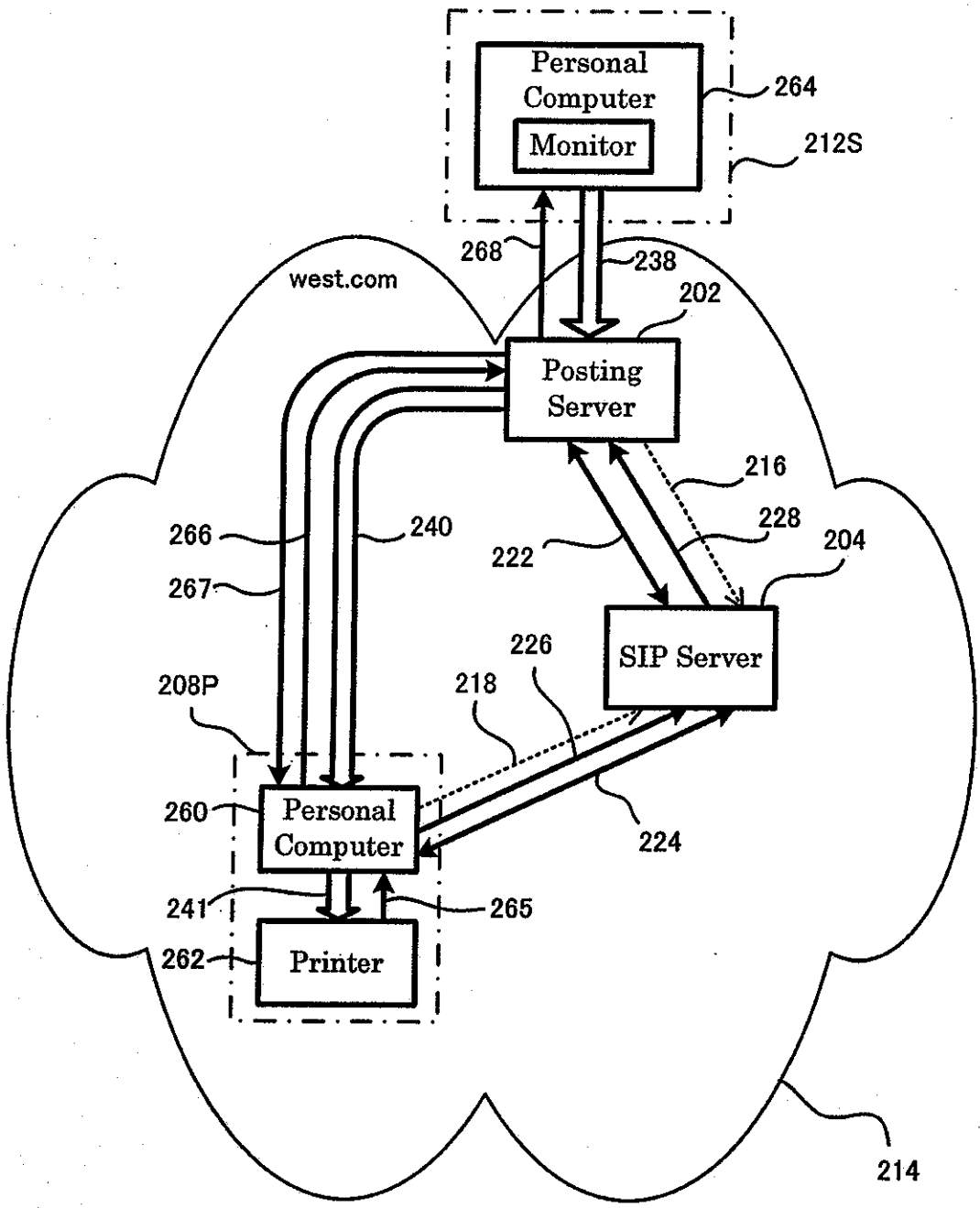
Personal Computer
Monitor
264
212S
268
238
west.com
202
Posting Server
216
228
204
222
266
240
267
SIP Server
226
218
208P
260
Personal Computer
224
241
265
262
Printer
214

Fig.27

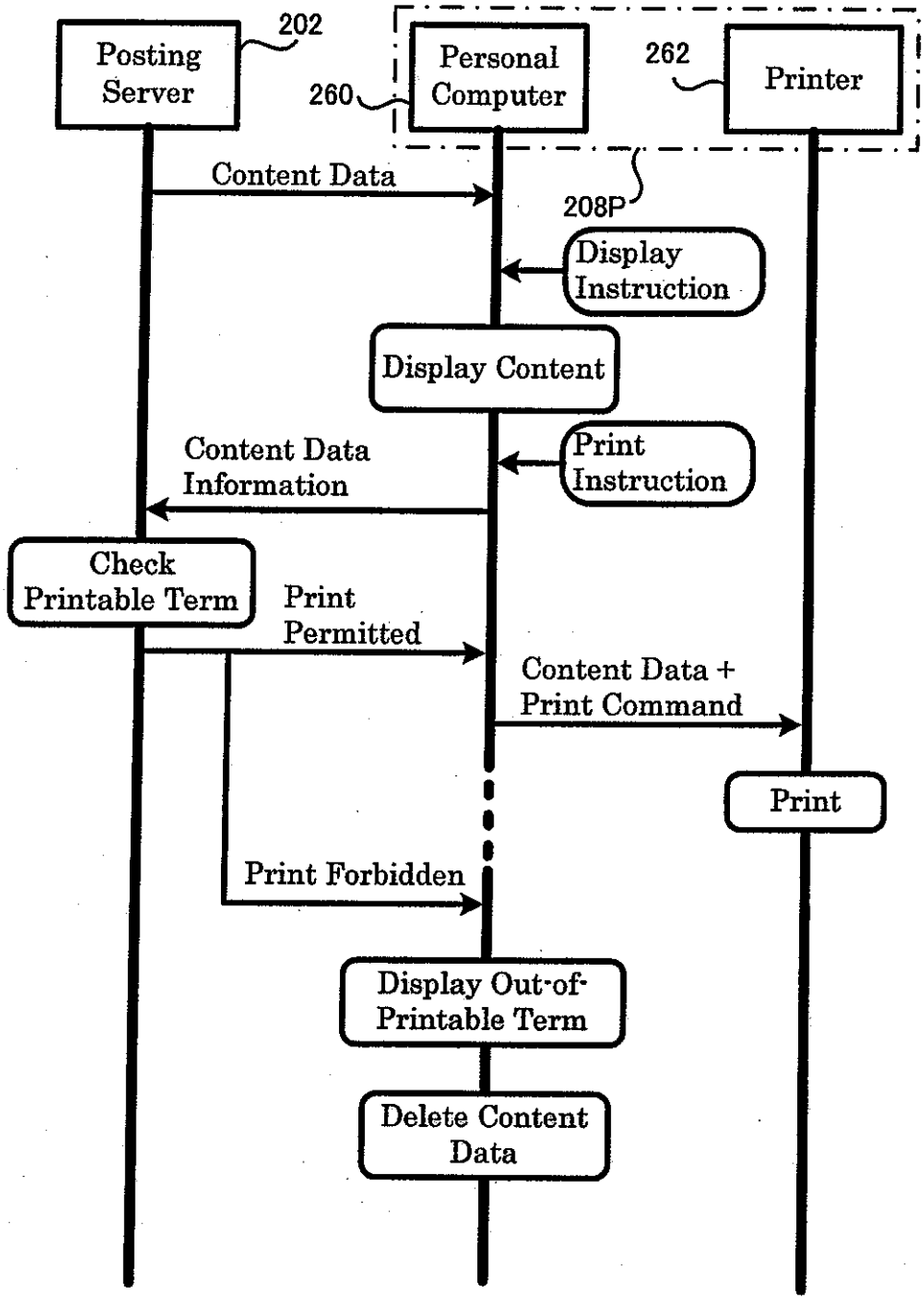
Posting Server
202
Personal Computer
260
262
Printer
Content Data
208P
Display Instruction
Display Content
Content Data Information
Print Instruction
Check Printable Term
Print Permitted
Content Data + Print Command
Print
Print Forbidden
Display Out-of-Printable Term
Delete Content Data