(12) INTERNATIONAL APPLICATION PUBLISHED UNDER THE PATENT COOPERATION TREATY (PCT)

(19) World Intellectual Property Organization
International Bureau

(43) International Publication Date
4 September 2008 (04.09.2008)

PCT

(10) International Publication Number
WO 2008/106390 A1

(51) International Patent Classification:
H04B 7/26 (2006.01) *H04B 7/24* (2006.01)

(21) International Application Number:
PCT/US2008/054858

(22) International Filing Date:
25 February 2008 (25.02.2008)

(25) Filing Language: English

(26) Publication Language: English

(30) Priority Data:
11/712,059 28 February 2007 (28.02.2007) US

(71) Applicant *(for all designated States except US)*: **INTEL CORPORATION** [US/US]; 2200 Mission College Boulevard, Santa Clara, California 95052 (US).

(72) Inventors; and

(75) Inventors/Applicants *(for US only)*: **QI, Emily** [CN/US]; 8320 NW Hawkins Blvd, Portland, Oregon 97229 (US). **TSAI, Jr-shian** [—/US]; 930 SW 163rd Avenue, #314, Beaverton, Oregon 97006 (US).

(74) Agents: **LEMOINE, Dana A.** et al.; Lemoine Patent Services, Pllc, C/O Intellevate LLC, P.O. Box 52050, Minneapolis, Minnesota 55402 (US).

(81) Designated States *(unless otherwise indicated, for every kind of national protection available)*: AE, AG, AL, AM, AO, AT, AU, AZ, BA, BB, BG, BH, BR, BW, BY, BZ, CA, CH, CN, CO, CR, CU, CZ, DE, DK, DM, DO, DZ, EC, EE, EG, ES, FI, GB, GD, GE, GH, GM, GT, HN, HR, HU, ID, IL, IN, IS, JP, KE, KG, KM, KN, KP, KR, KZ, LA, LC, LK, LR, LS, LT, LU, LY, MA, MD, ME, MG, MK, MN, MW, MX, MY, MZ, NA, NG, NI, NO, NZ, OM, PG, PH, PL, PT, RO, RS, RU, SC, SD, SE, SG, SK, SL, SM, SV, SY, TJ, TM, TN, TR, TT, TZ, UA, UG, US, UZ, VC, VN, ZA, ZM, ZW.

(84) Designated States *(unless otherwise indicated, for every kind of regional protection available)*: ARIPO (BW, GH, GM, KE, LS, MW, MZ, NA, SD, SL, SZ, TZ, UG, ZM, ZW), Eurasian (AM, AZ, BY, KG, KZ, MD, RU, TJ, TM), European (AT, BE, BG, CH, CY, CZ, DE, DK, EE, ES, FI, FR, GB, GR, HR, HU, IE, IS, IT, LT, LU, LV, MC, MT, NL, NO, PL, PT, RO, SE, SI, SK, TR), OAPI (BF, BJ, CF, CG, CI, CM, GA, GN, GQ, GW, ML, MR, NE, SN, TD, TG).

Published:
— *with international search report*

[Continued on next page]

(54) Title: MOBILE PLATFORM TRACKING IN WIRELESS NETWORKS

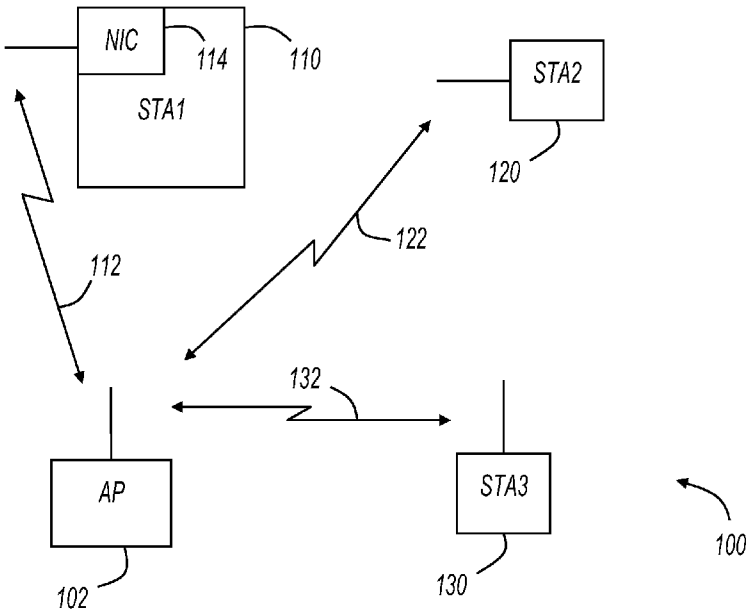

FIG. 1

(57) Abstract: A mobile station in a wireless network provides a presence indication when in a power saving state. The presence indication is sent periodically, and the period is dependent on whether the mobile station is stationary or in motion. The period may also be dependent on an asset protection level of the mobile station.

WO 2008/106390 A1

— *before the expiration of the time limit for amending the claims and to be republished in the event of receipt of amendments*