(12) INTERNATIONAL APPLICATION PUBLISHED UNDER THE PATENT COOPERATION TREATY (PCT)

(19) World Intellectual Property Organization
International Bureau

(43) International Publication Date
24 March 2005 (24.03.2005)

PCT

(10) International Publication Number
WO 2005/025732 A2

(51) International Patent Classification[7]: B01J

(21) International Application Number:
PCT/US2004/028745

(22) International Filing Date:
4 September 2004 (04.09.2004)

(25) Filing Language: English

(26) Publication Language: English

(30) Priority Data:
10/656,627 5 September 2003 (05.09.2003) US

(71) Applicant and
(72) Inventor: HOLL, Richard, A. [CA/US]; 7096 Quito Court, Camarillo, CA 93012 (US).

(81) Designated States *(unless otherwise indicated, for every kind of national protection available)*: AE, AG, AL, AM, AT, AU, AZ, BA, BB, BG, BR, BW, BY, BZ, CA, CH, CN, CO, CR, CU, CZ, DE, DK, DM, DZ, EC, EE, EG, ES, FI, GB, GD, GE, GH, GM, HR, HU, ID, IL, IN, IS, JP, KE, KG, KP, KR, KZ, LC, LK, LR, LS, LT, LU, LV, MA, MD, MG, MK, MN, MW, MX, MZ, NA, NI, NO, NZ, OM, PG, PH, PL, PT, RO, RU, SC, SD, SE, SG, SK, SL, SY, TJ, TM, TN, TR, TT, TZ, UA, UG, US, UZ, VC, VN, YU, ZA, ZM, ZW.

(84) Designated States *(unless otherwise indicated, for every kind of regional protection available)*: ARIPO (BW, GH, GM, KE, LS, MW, MZ, NA, SD, SL, SZ, TZ, UG, ZM, ZW), Eurasian (AM, AZ, BY, KG, KZ, MD, RU, TJ, TM), European (AT, BE, BG, CH, CY, CZ, DE, DK, EE, ES, FI, FR, GB, GR, HU, IE, IT, LU, MC, NL, PL, PT, RO, SE, SI, SK, TR), OAPI (BF, BJ, CF, CG, CI, CM, GA, GN, GQ, GW, ML, MR, NE, SN, TD, TG).

Declaration under Rule 4.17:
— *of inventorship (Rule 4.17(iv)) for US only*

Published:
— *without international search report and to be republished upon receipt of that report*

For two-letter codes and other abbreviations, refer to the "Guidance Notes on Codes and Abbreviations" appearing at the beginning of each regular issue of the PCT Gazette.

(54) Title: METHODS OF OPERATING SURFACE REACTORS AND REACTORS EMPLOYING SUCH METHODS

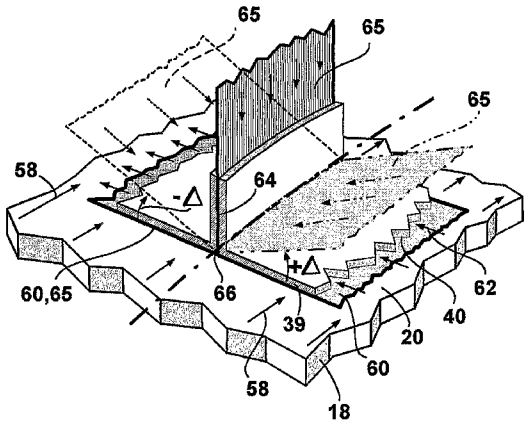

(57) Abstract: New methods of operating surface reactors, and such reactors, particularly spinning disk reactors, require that a first reactant is fed to a reactor surface (20) and forms a thin radially outward moving film (60) thereon in a reaction passage (42) formed between the reaction surface (20) and a parallel, closely spaced (less than 1 mm) retaining surface (40). The passage thickness is precisely controllable and the surfaces (20, 40) move relative to one another so that strong shear is applied to the material between them. A second reactant is fed to the surface (20) as a second thin film (65) that as it enters the first film (60), preferably perpendicularly, it is immediately merged therewith along a correspondingly very narrow interaction line (66) by the shear at a rate such as to break up molecular clusters in the films, so that their molecules can aggressively and completely interact by forced interdiffusion. In spinning disk (18) apparatus the first film (60) is fed along the spin axis (14), while subsequent films (65, etc.) are fed at respective distances from the axis (14) such that there is adequate shear for the molecular cluster disruption. Preferably each film (65, etc.)after the first (60) is fed into the reaction passage (42) through a respective thin annular nozzle producing a thin circular film (65) that simultaneously merges with the first film (60) along its entire length.

WO 2005/025732 A2