DRAWINGS

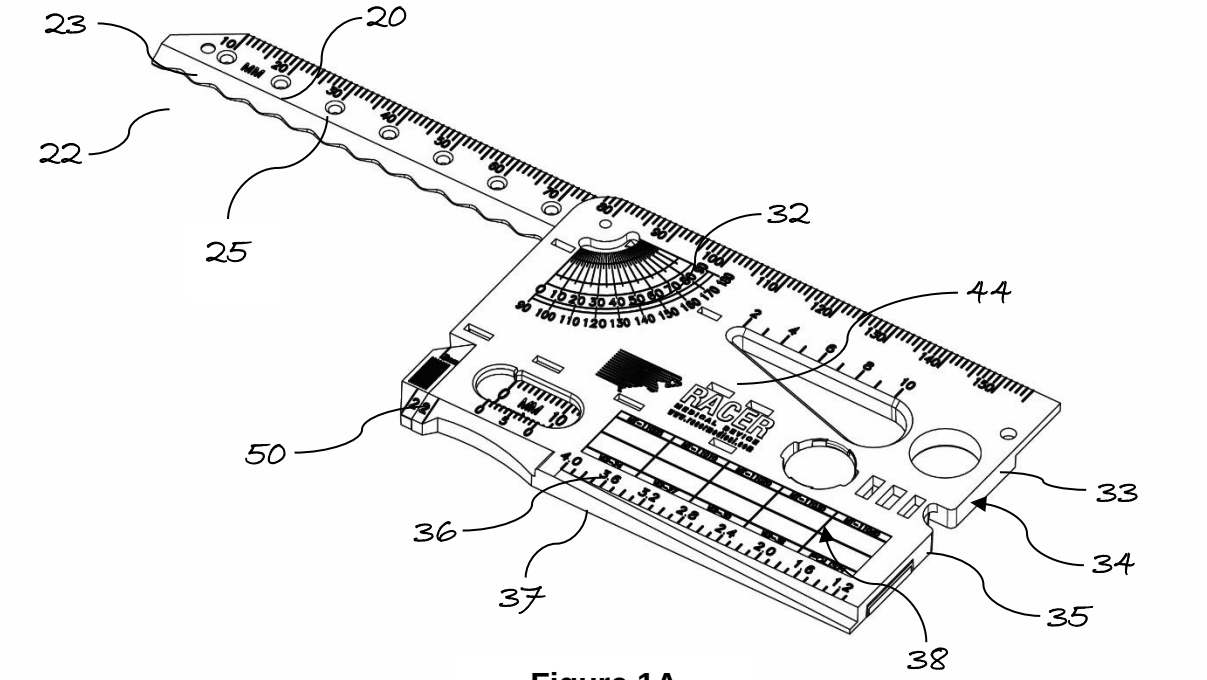

Figure 1A

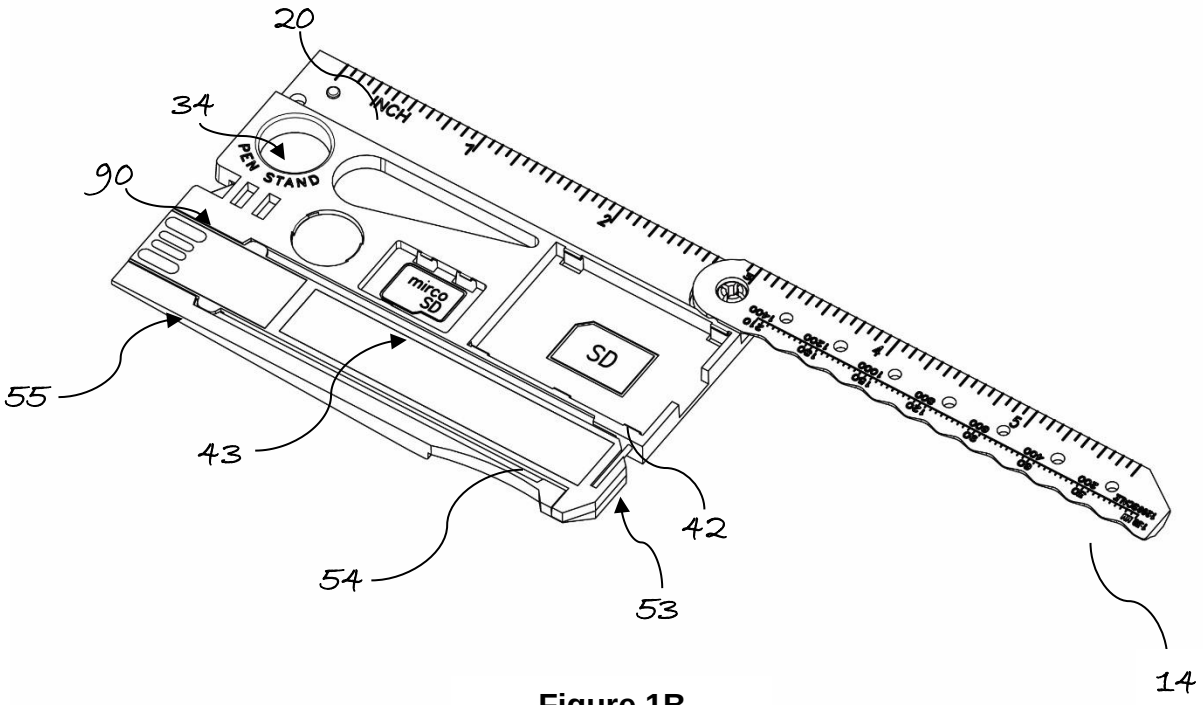

Figure 1B

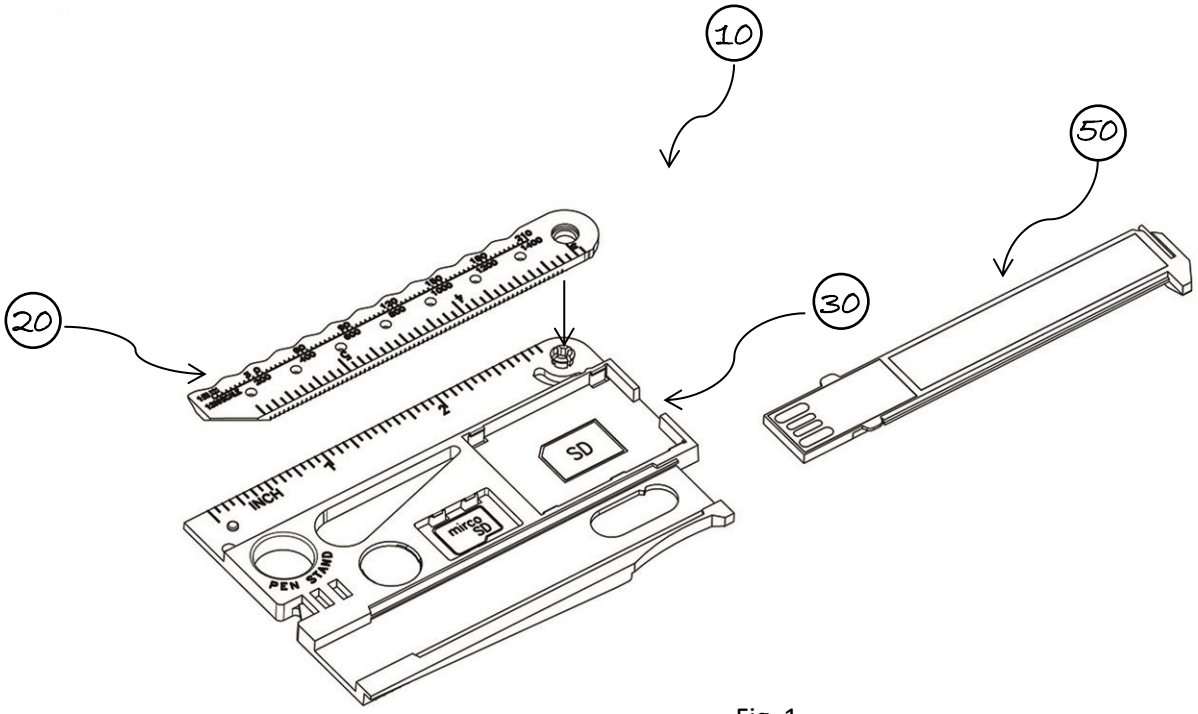
10
50
20
30
SD
micro SD
INCH
PEN STAND

Fig. 1

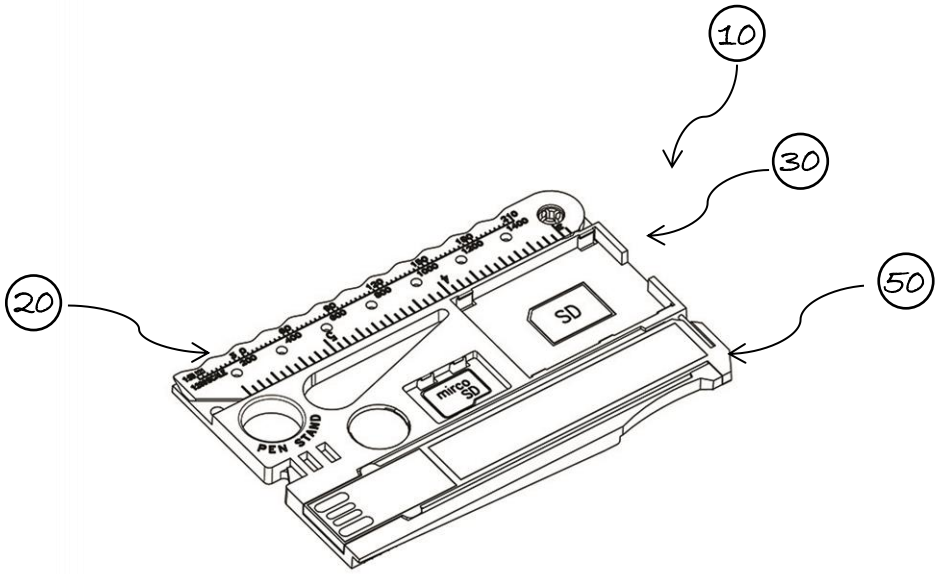
10
30
20
50
SD
micro SD
PEN STAND

Fig. 2

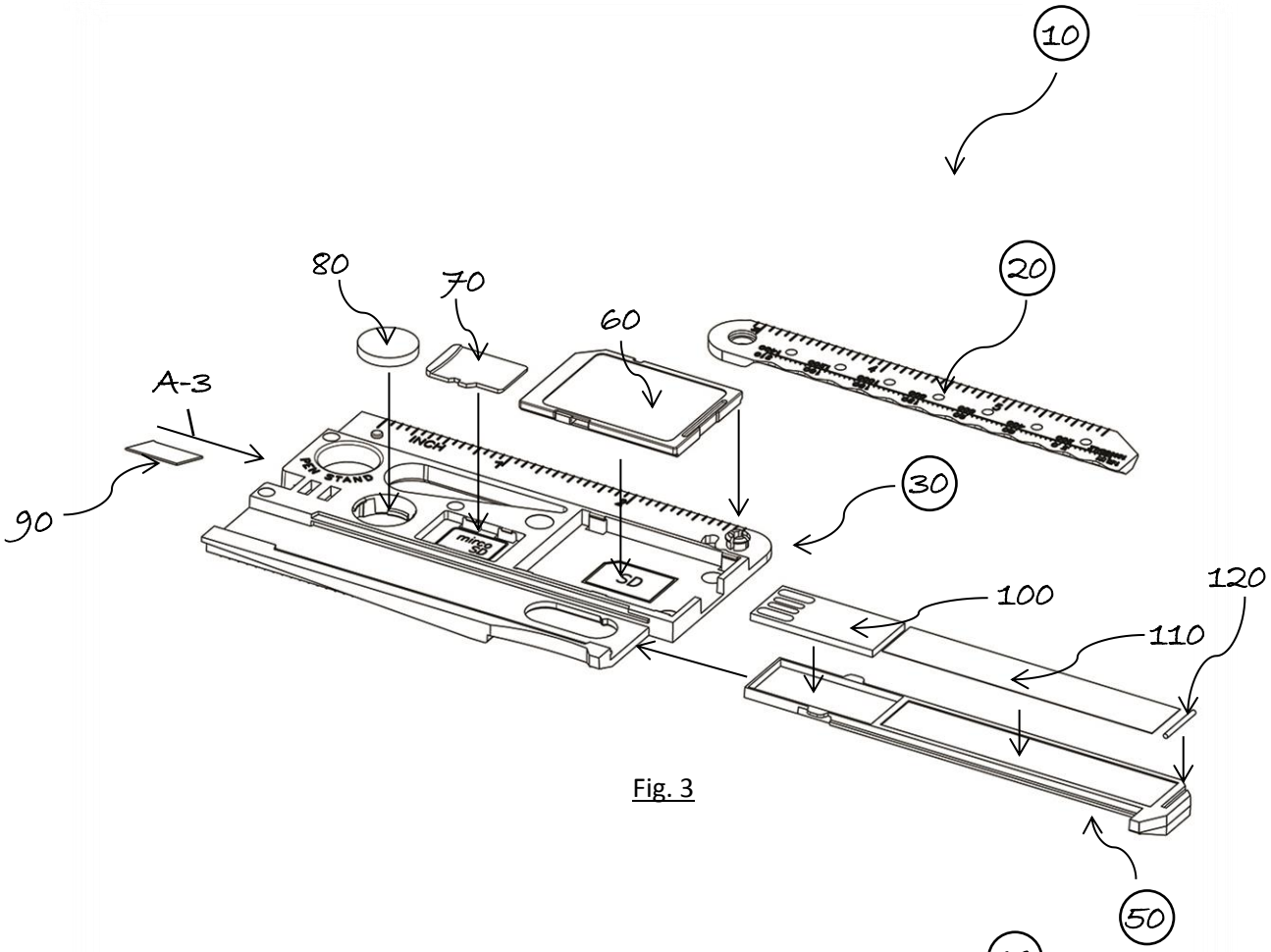

Fig. 3

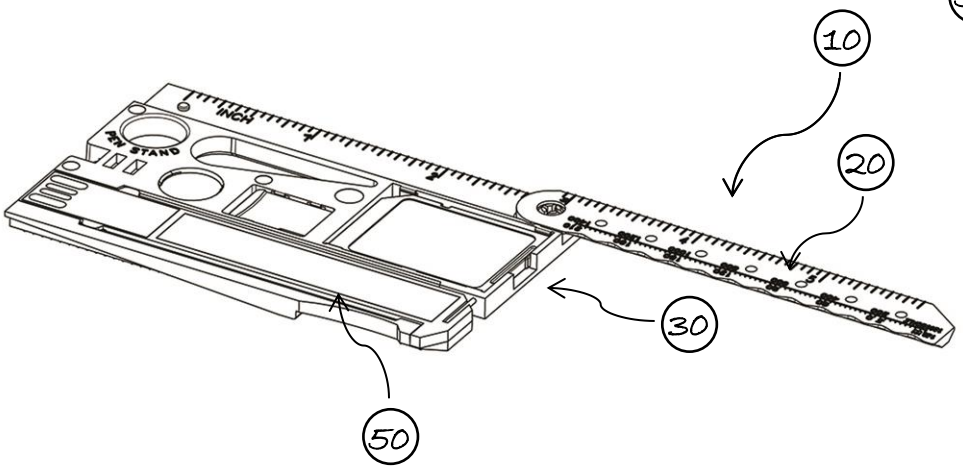

Fig. 4

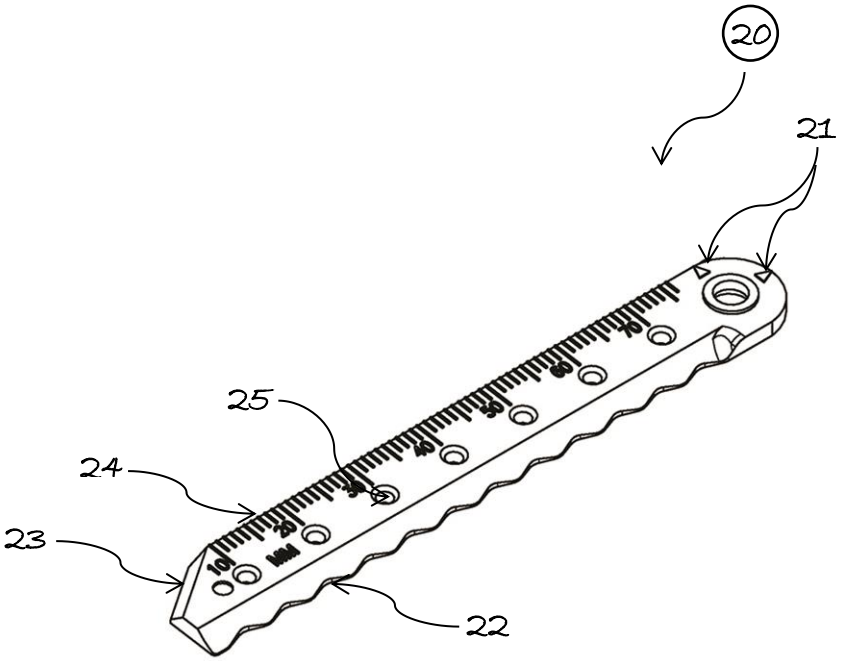

Fig. 5

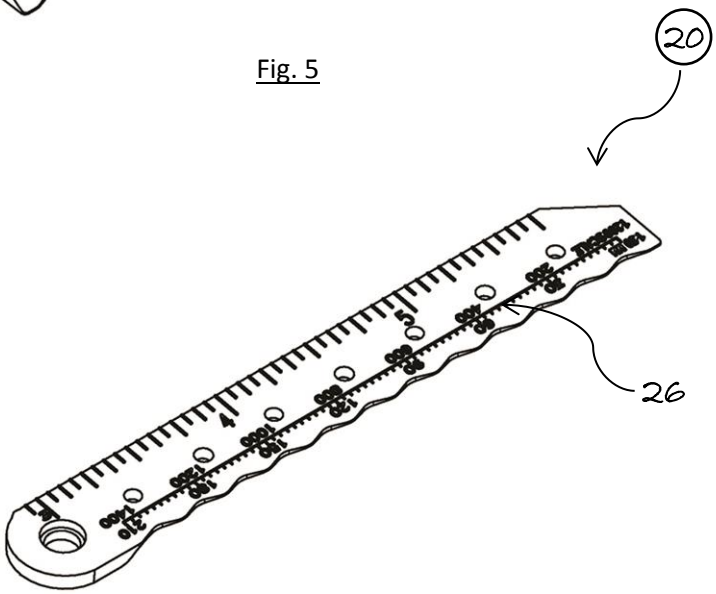

Fig. 6

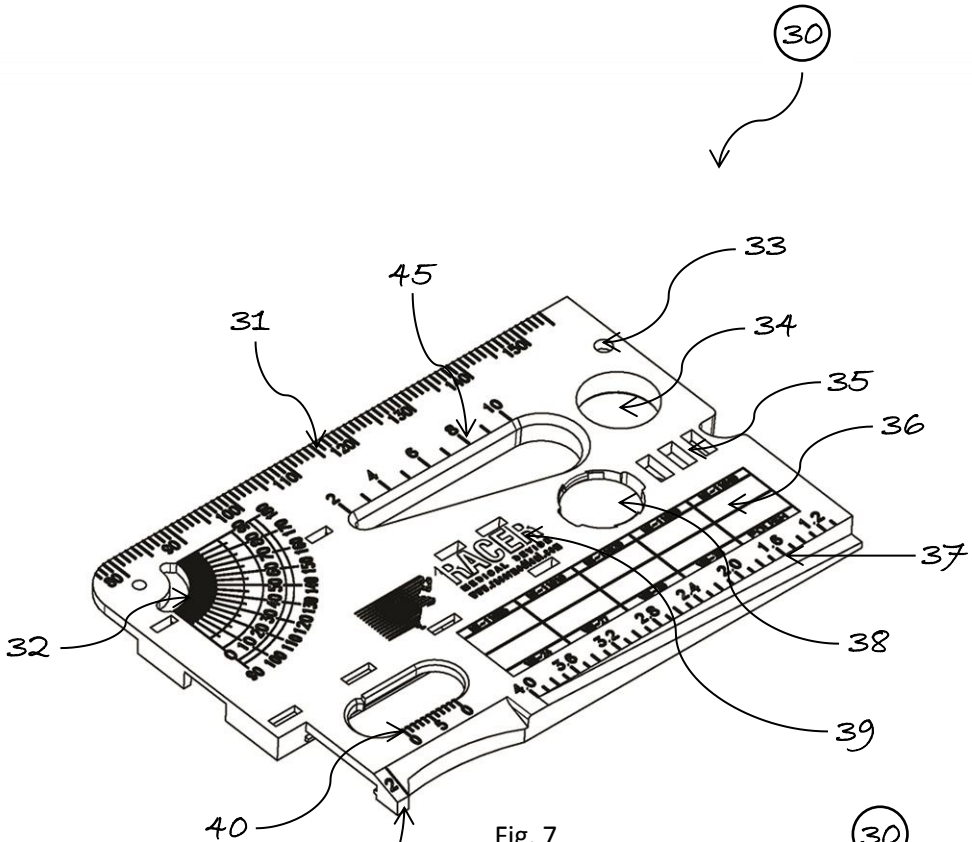
30
33
45
31
34
35
36
37
38
32
39
40
41

Fig. 7

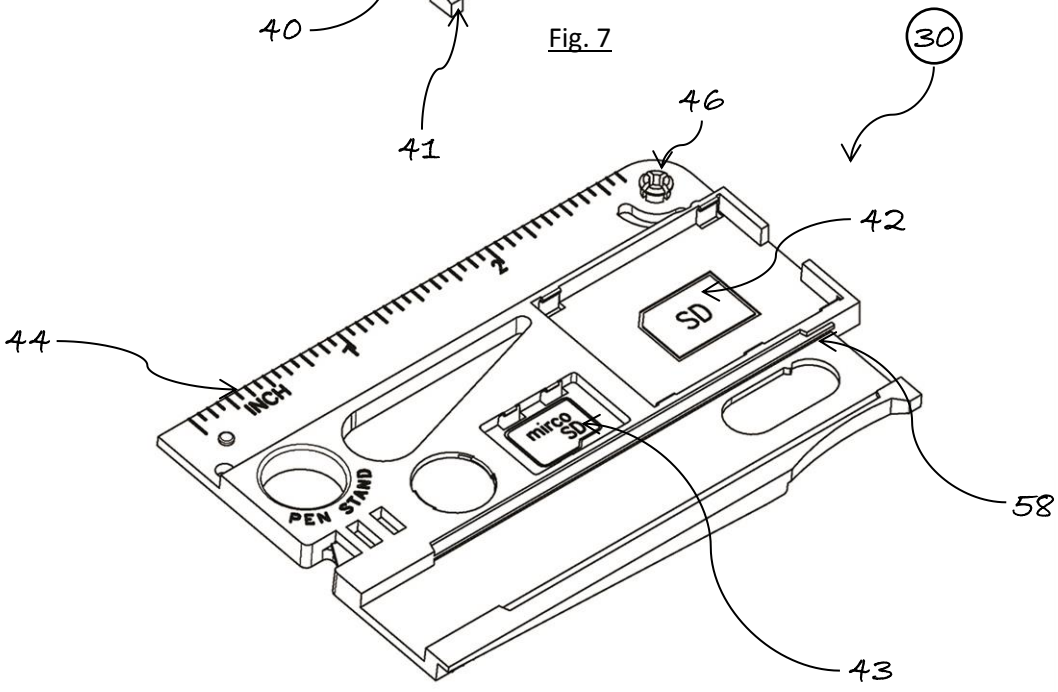
30
46
42
44
SD
INCH
mirco SD
PEN STAND
58
43

Fig. 8

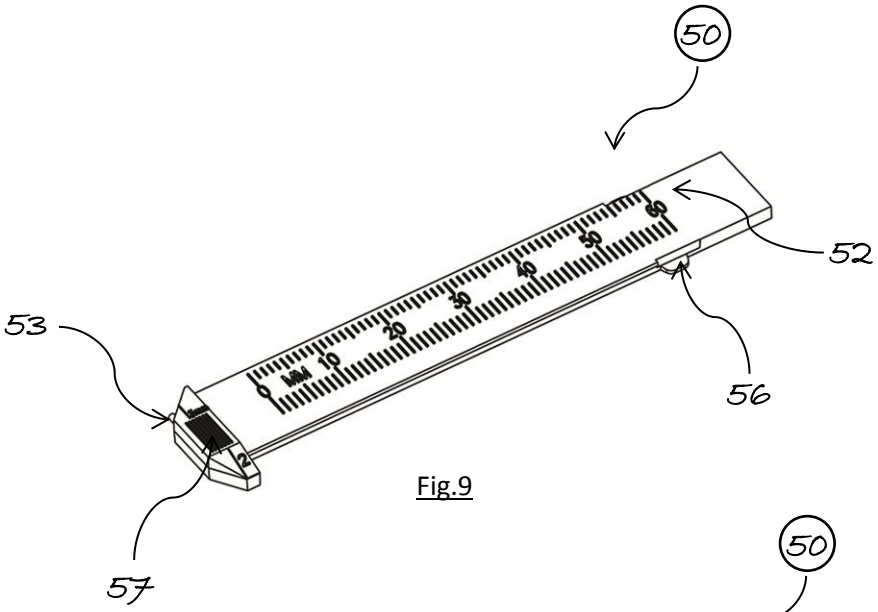

Fig.9

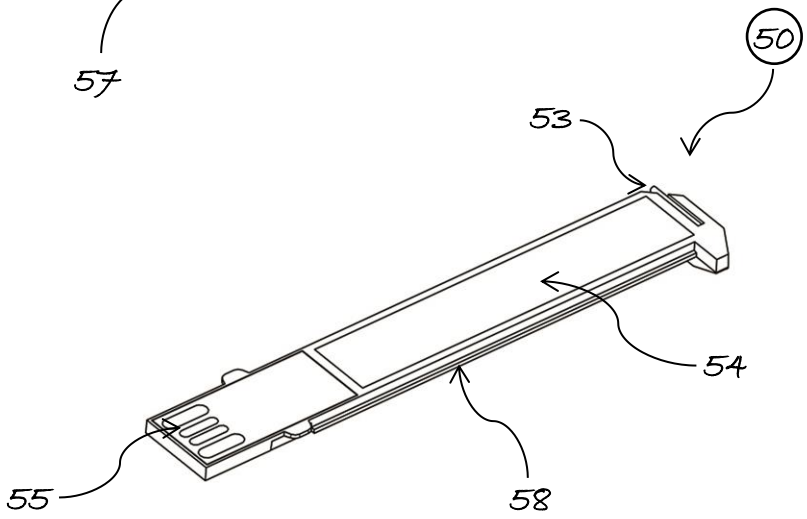

Fig.10

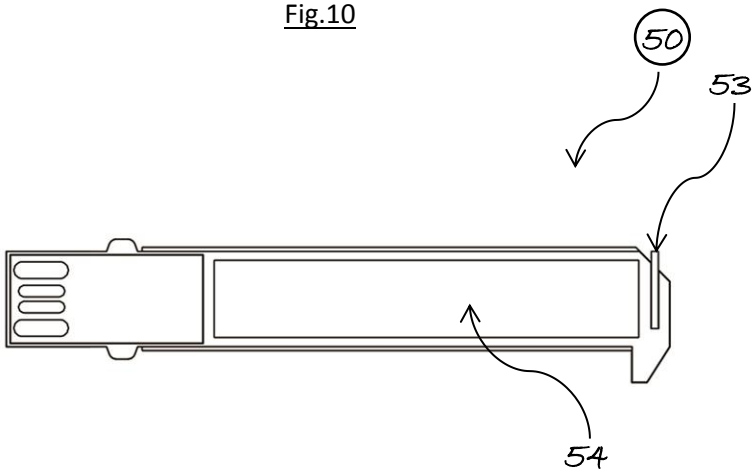

Fig.11

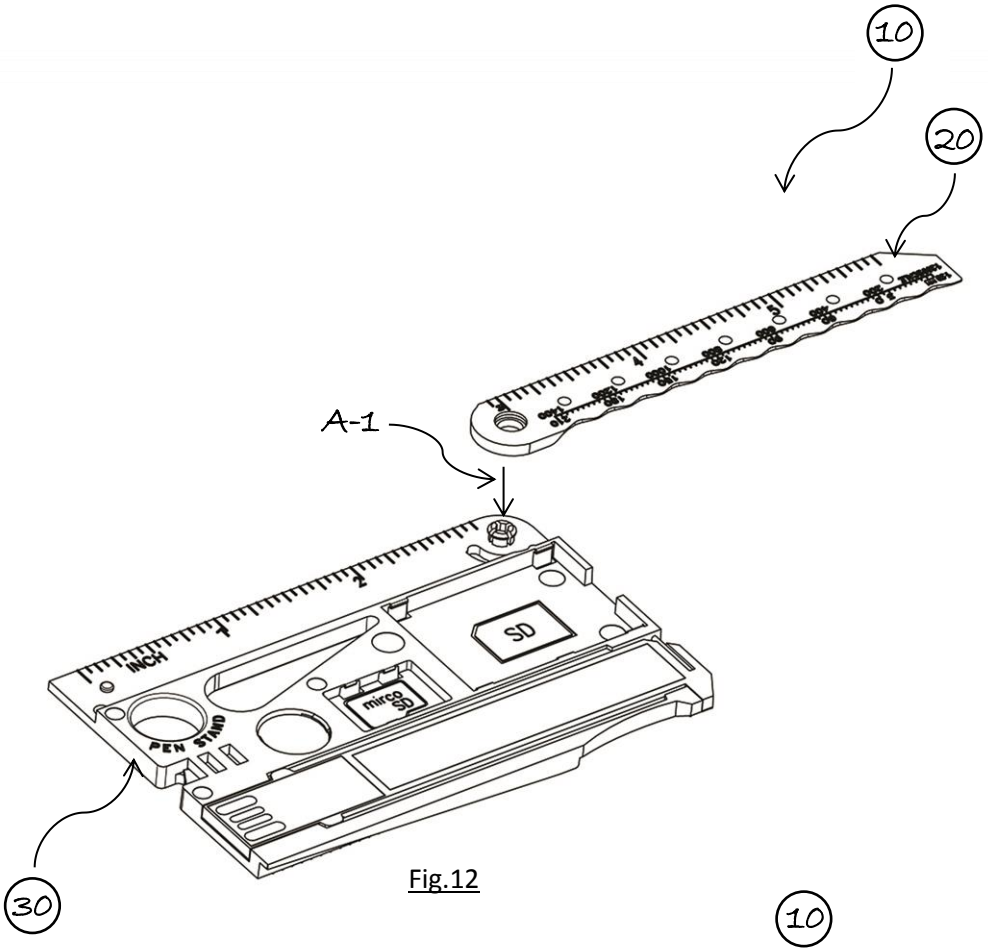
10
20
A-1
INCH
SD
mirco SD
PEN STAND
30

Fig.12

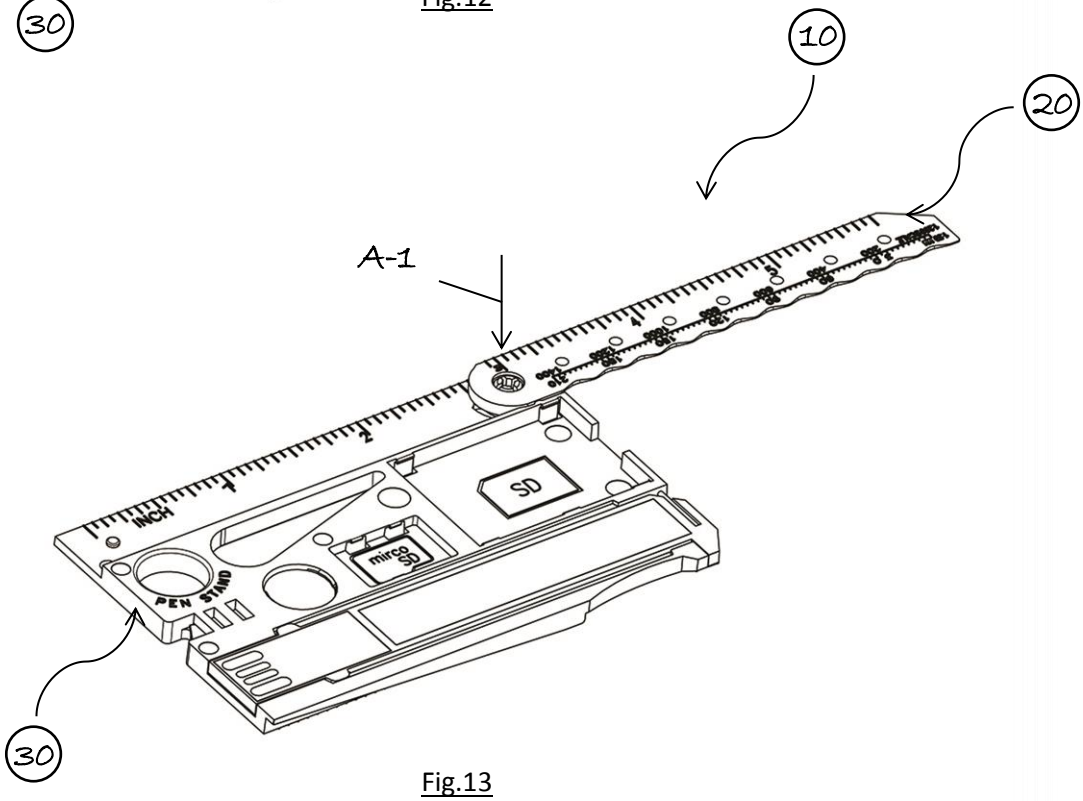
10
20
A-1
INCH
SD
mirco SD
PEN STAND
30

Fig.13

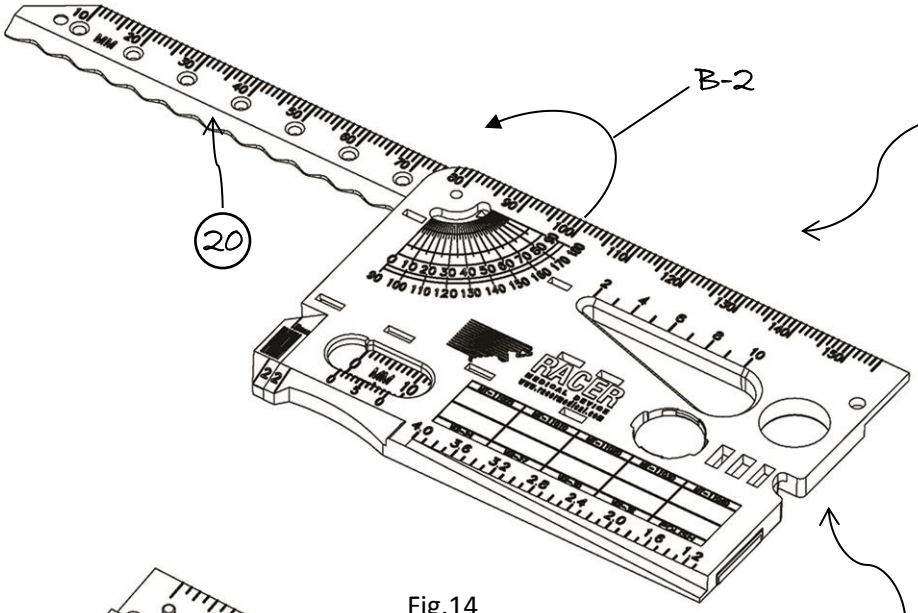

Fig.14

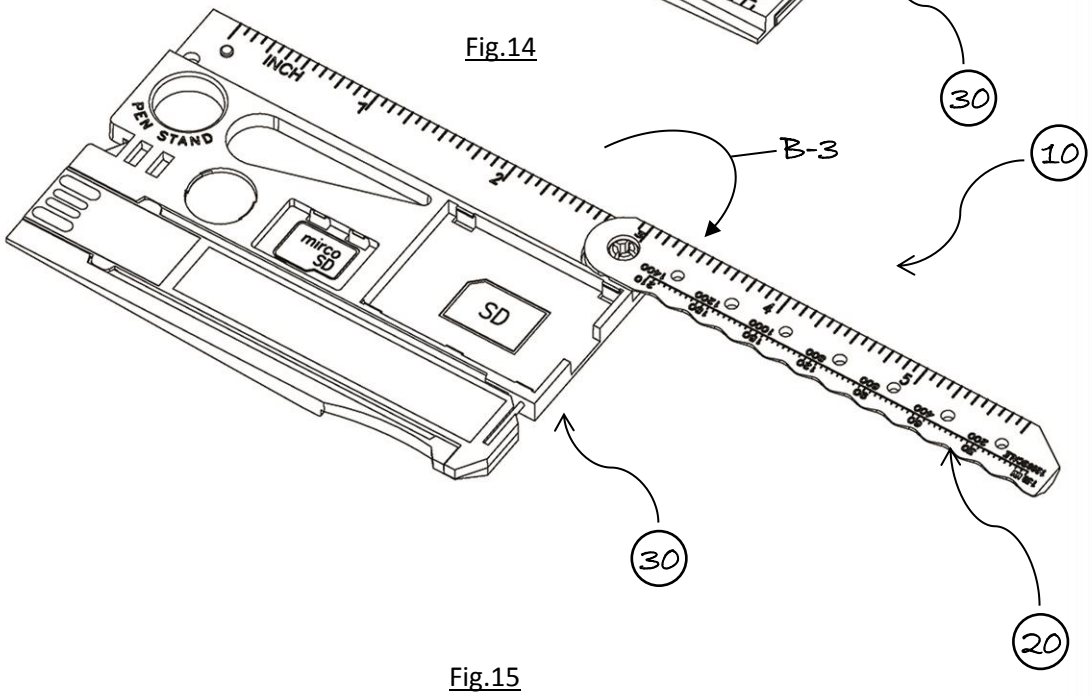

Fig.15

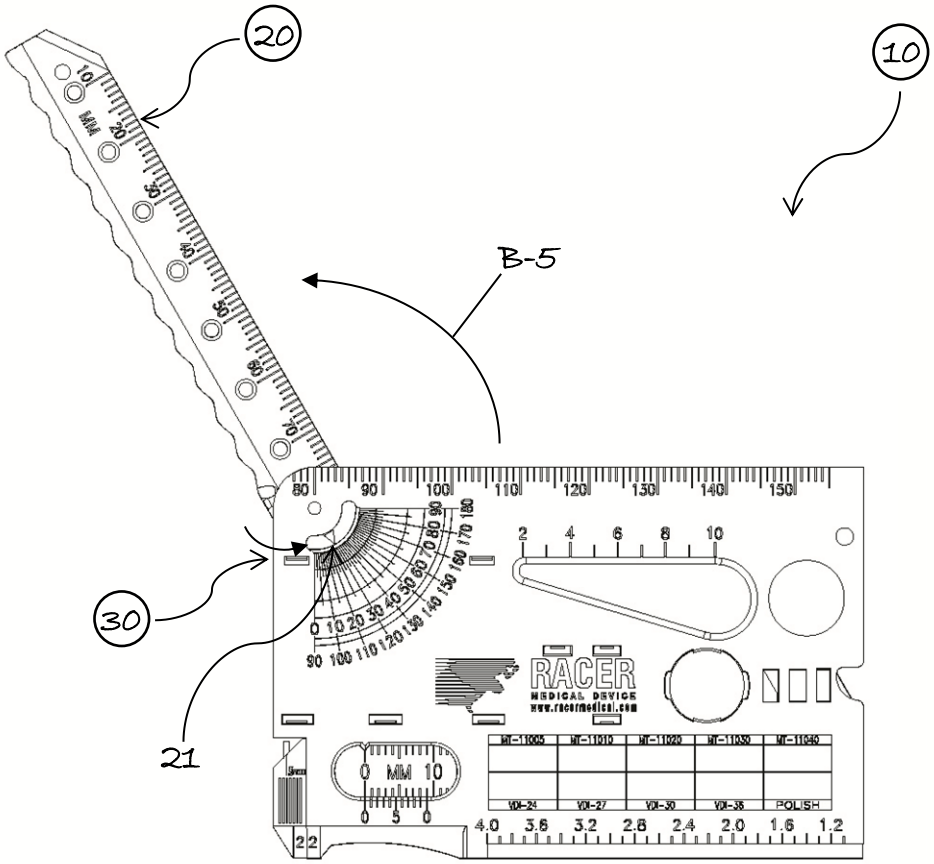
20
10
B-5
30
21
RACER
MEDICAL DEVICE
www.racermedical.com
POLISH

Fig. 16

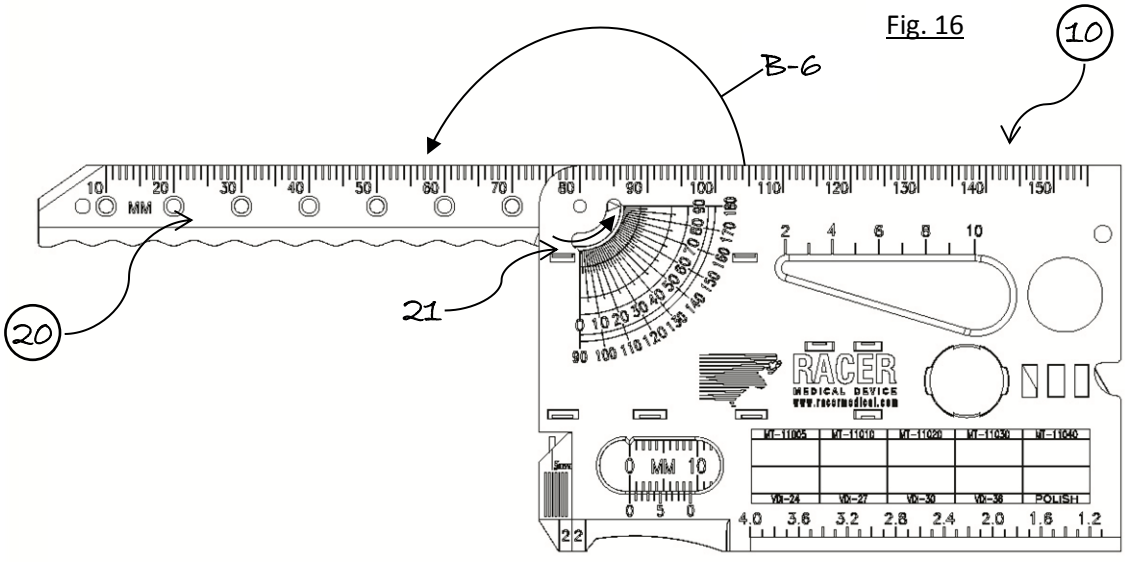
B-6
10
20
21
RACER
MEDICAL DEVICE
www.racermedical.com
POLISH

Fig. 17

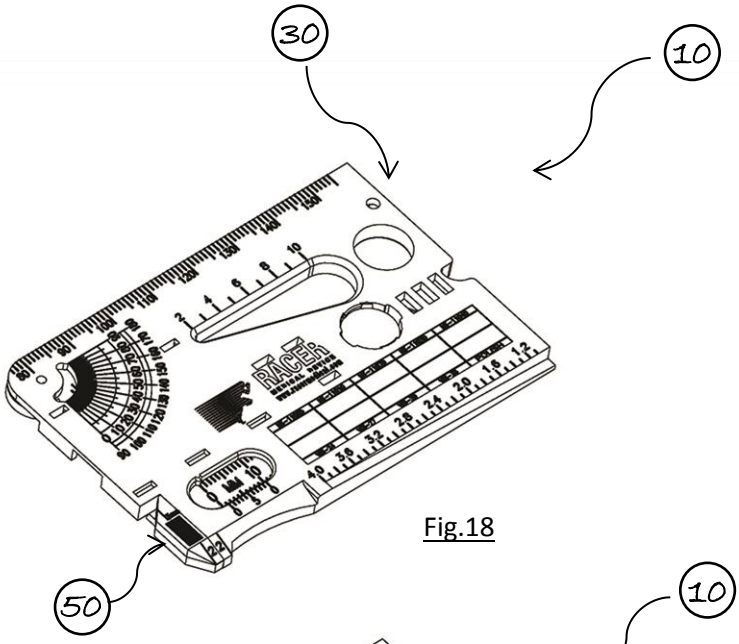

Fig.18

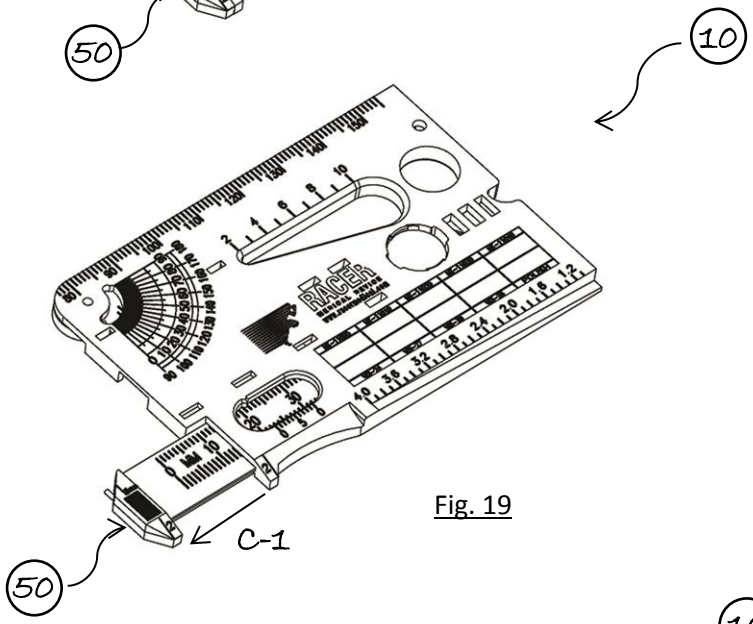

Fig. 19

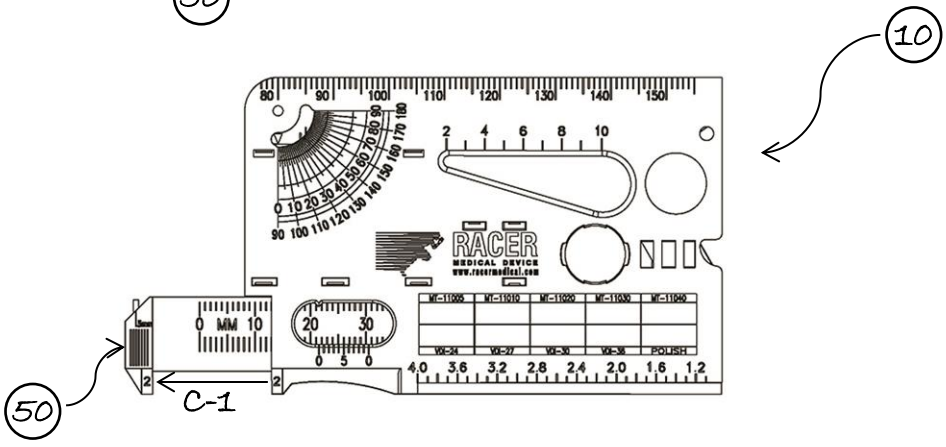

Fig. 20

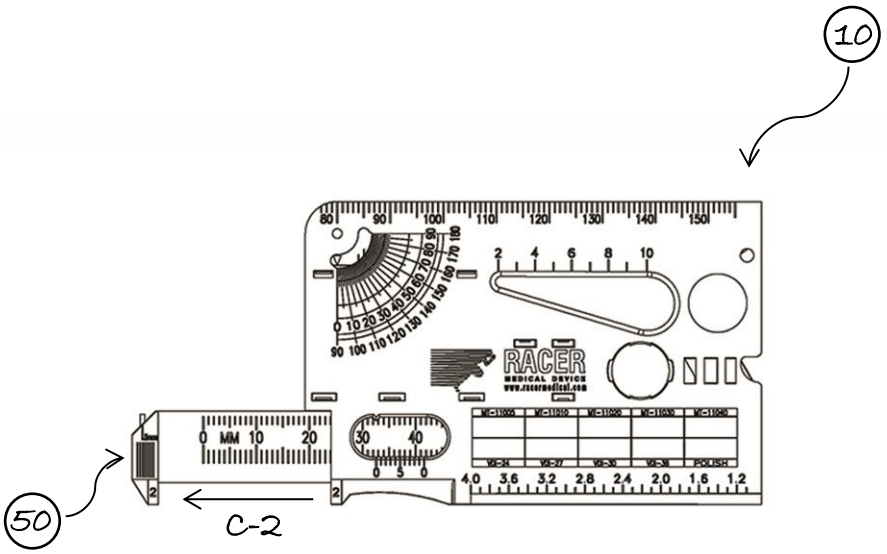

Fig. 21

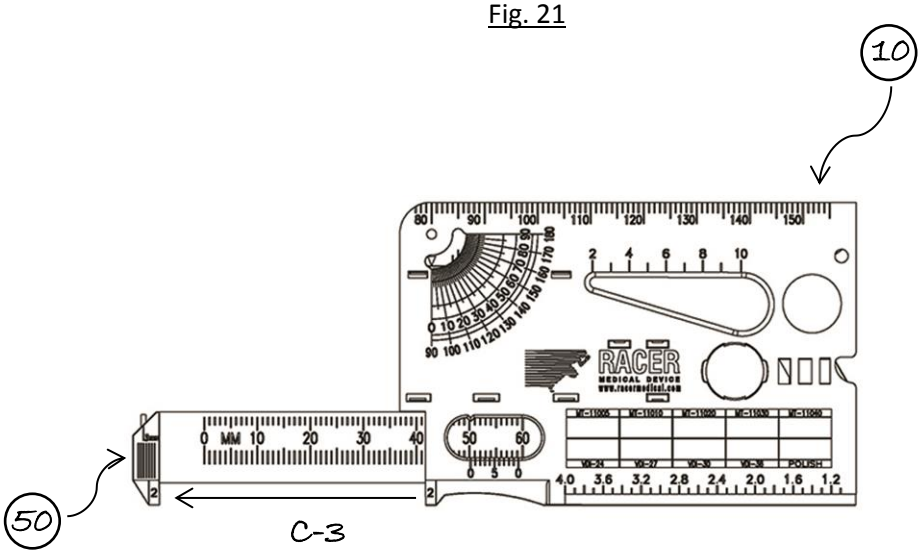

Fig. 22

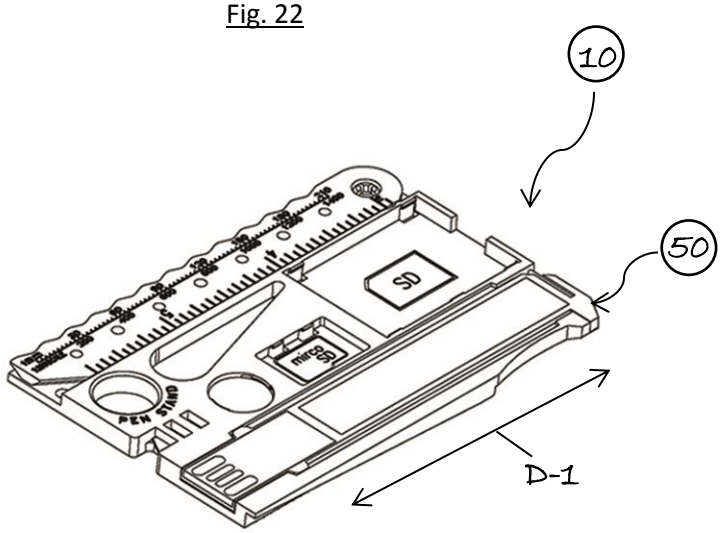

Fig.23

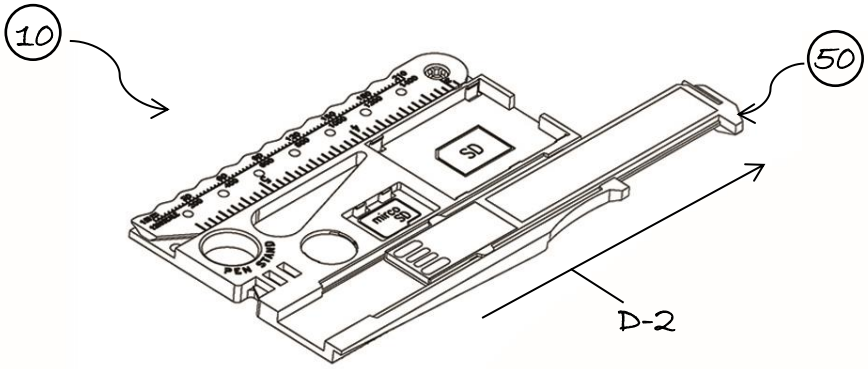

Fig. 24

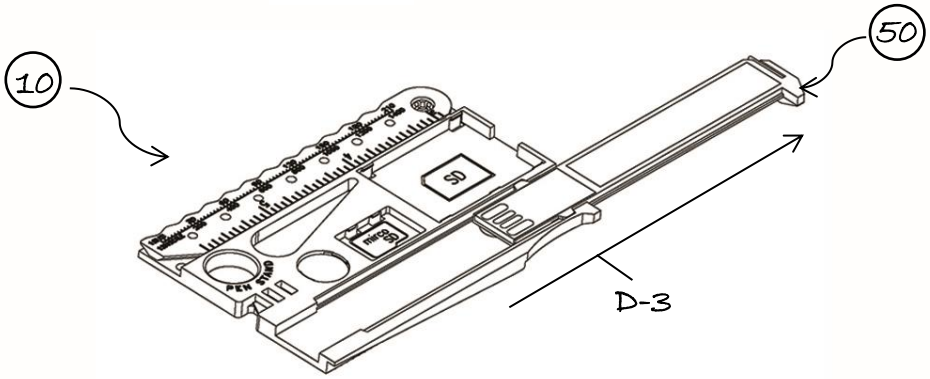

Fig.25

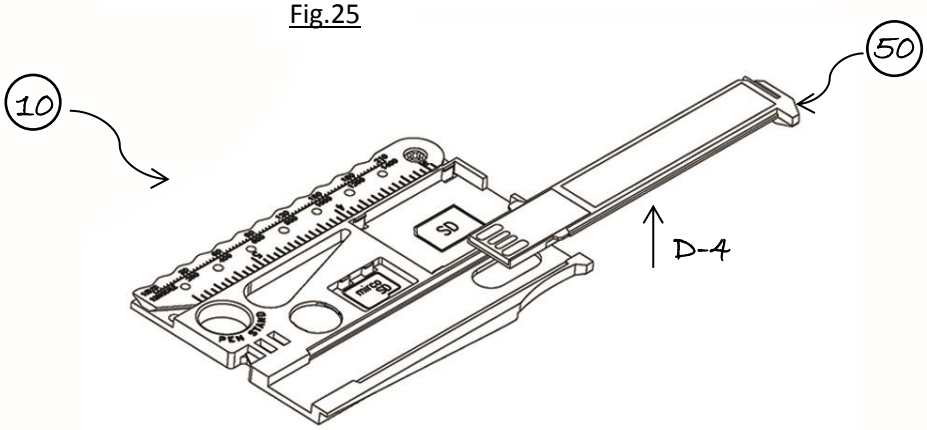

Fig.26

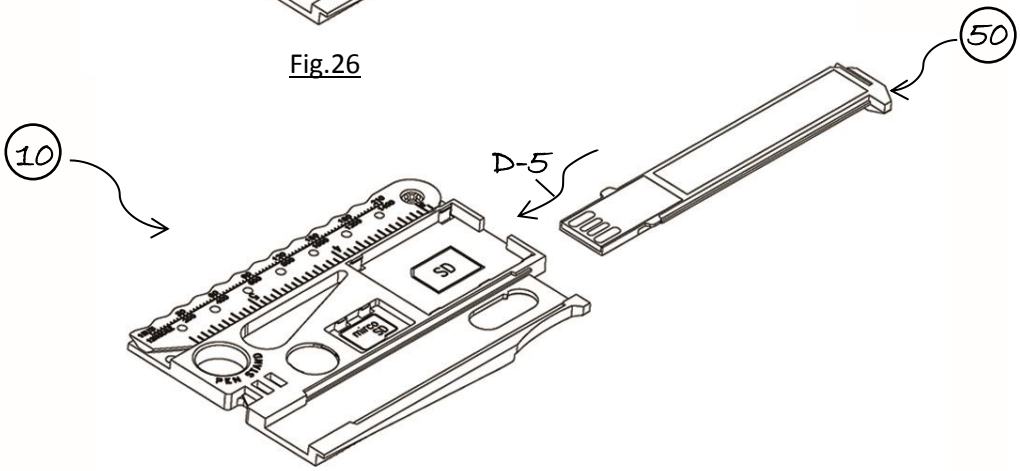

Fig.27