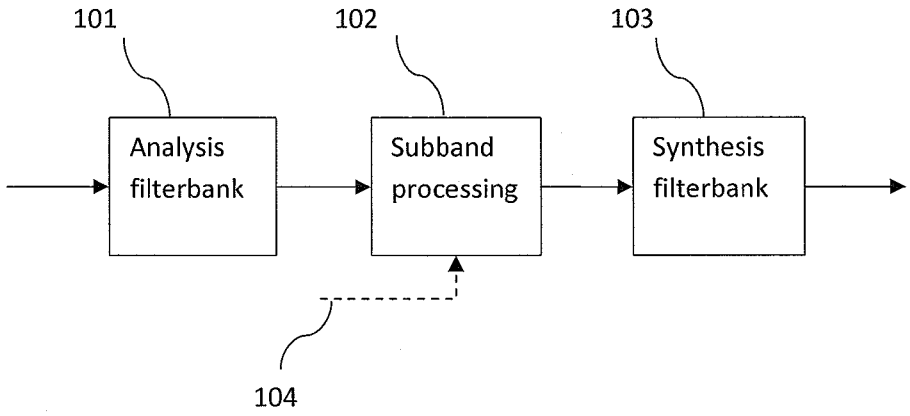
101
102
103
Analysis filterbank
Subband processing
Synthesis filterbank
104

Fig. 1

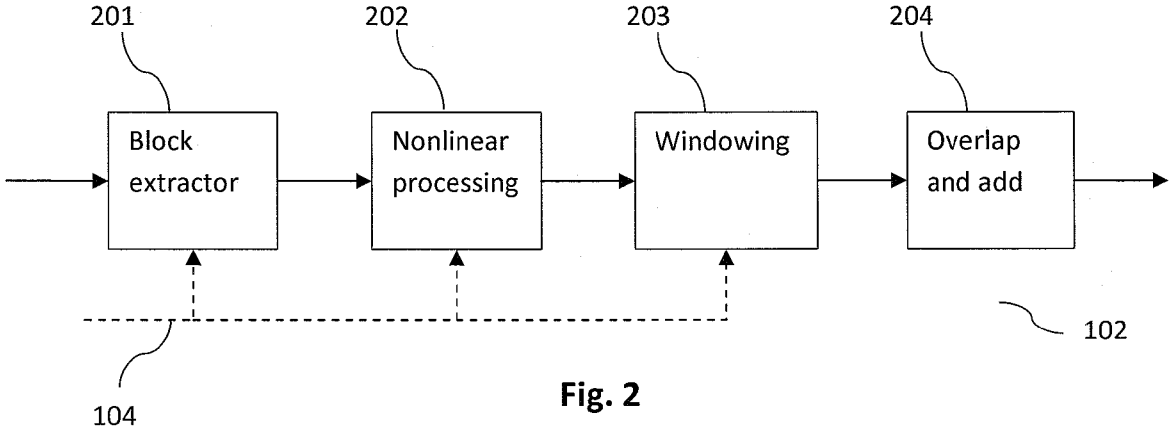
201
202
203
204
Block extractor
Nonlinear processing
Windowing
Overlap and add
102
104

Fig. 2

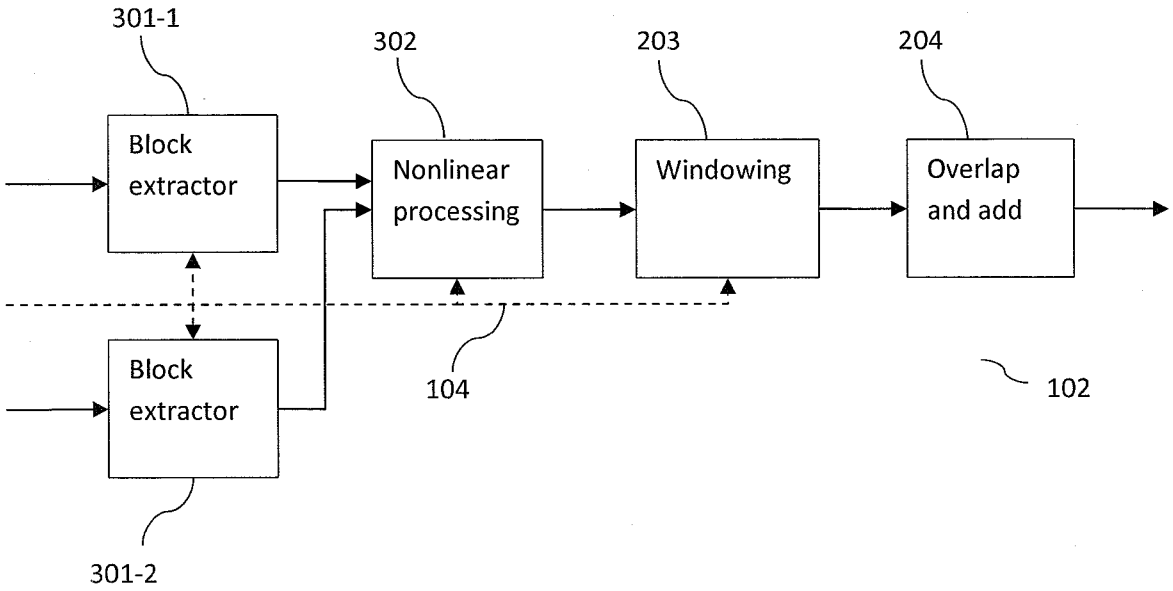
301-1
302
203
204
Block extractor
Nonlinear processing
Windowing
Overlap and add
Block extractor
104
102
301-2

Fig. 3

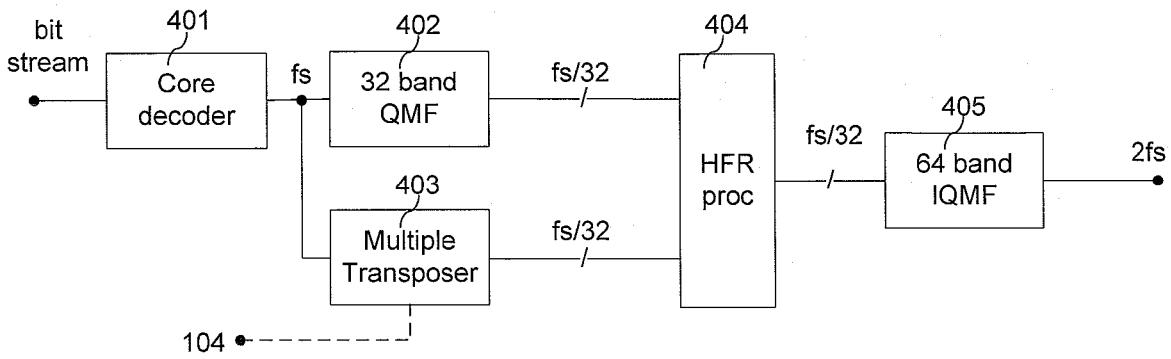
bit stream
401
Core decoder
fs
402
32 band QMF
fs/32
404
HFR proc
fs/32
405
64 band IQMF
2fs
403
Multiple Transposer
fs/32
104

Fig. 4

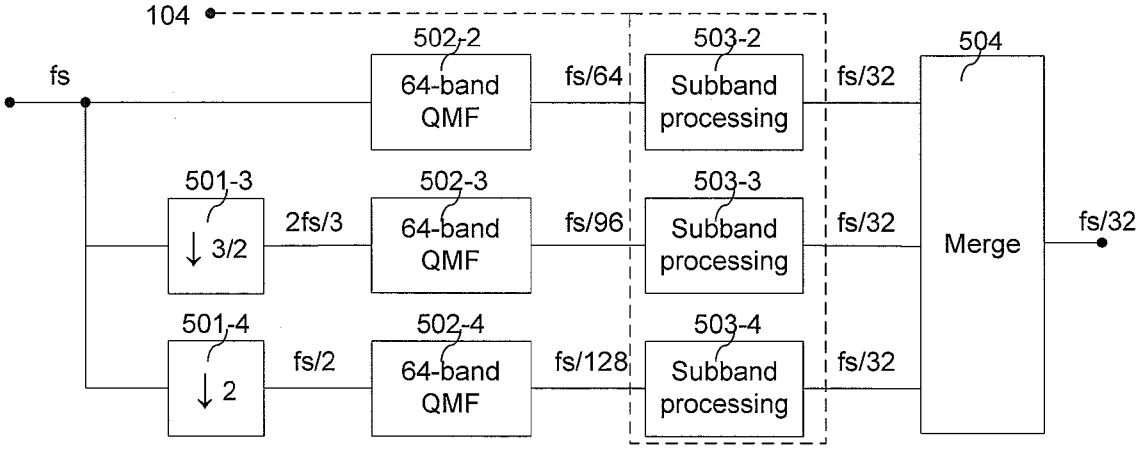
104
fs
502-2
64-band QMF
fs/64
503-2
Subband processing
fs/32
504
501-3
↓ 3/2
2fs/3
502-3
64-band QMF
fs/96
503-3
Subband processing
fs/32
Merge
fs/32
501-4
↓ 2
fs/2
502-4
64-band QMF
fs/128
503-4
Subband processing
fs/32

Fig. 5

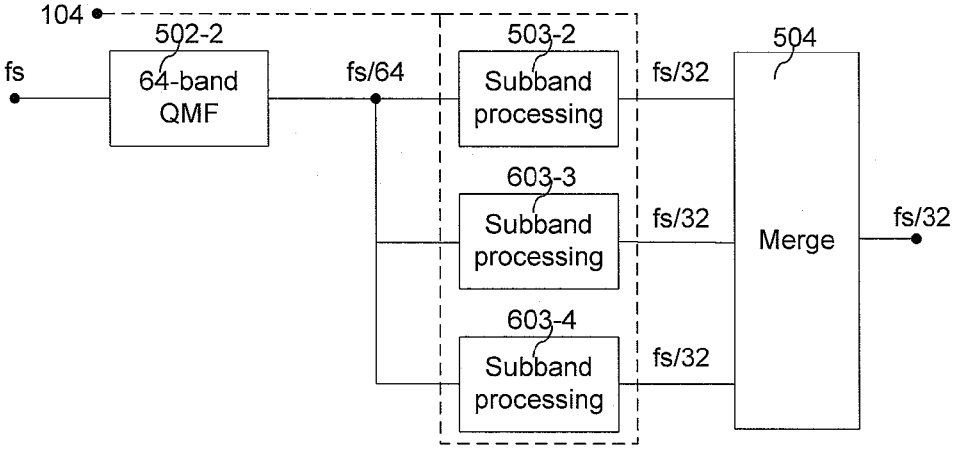
104
fs
502-2
64-band QMF
fs/64
503-2
Subband processing
fs/32
504
603-3
Subband processing
fs/32
Merge
fs/32
603-4
Subband processing
fs/32

Fig. 6

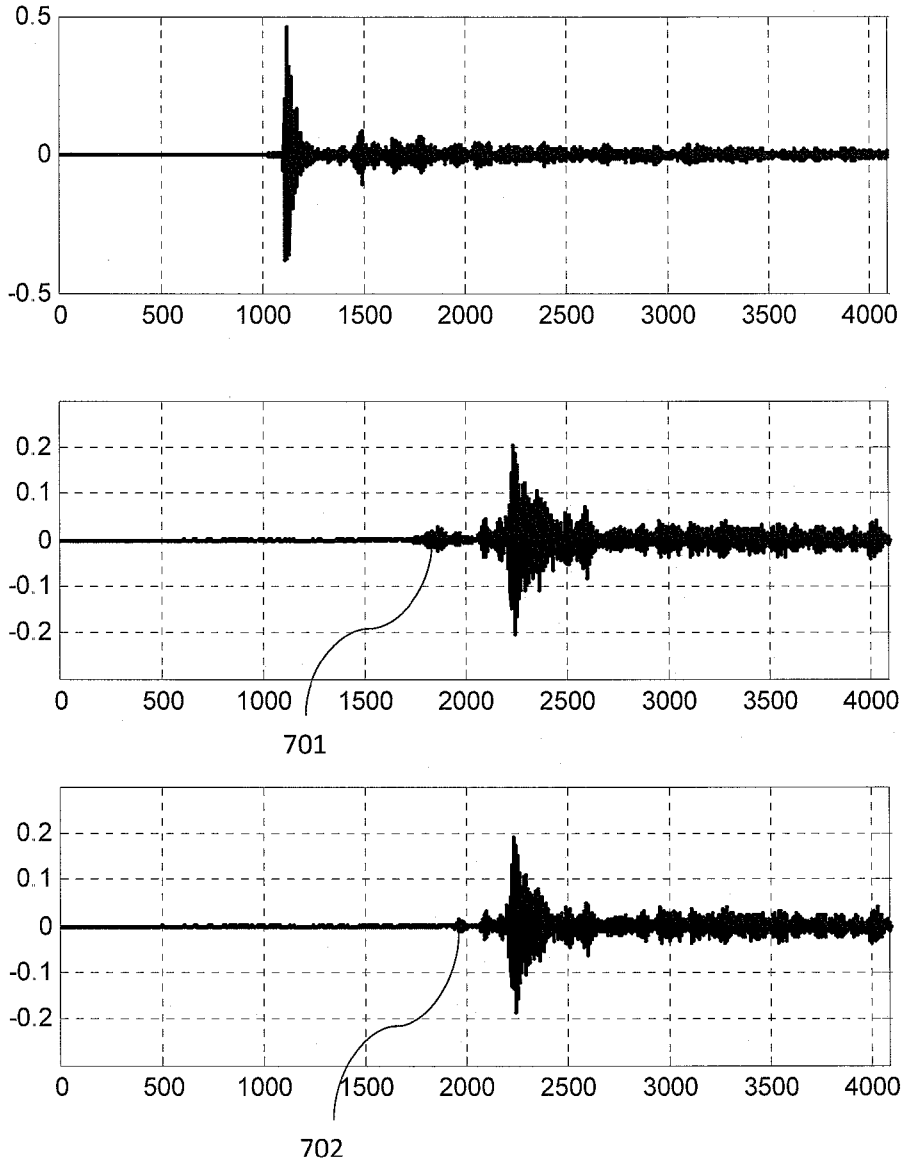
0.5
0
-0.5
0
500
1000
1500
2000
2500
3000
3500
4000
0.2
0.1
0
-0.1
-0.2
701
702

Fig. 7