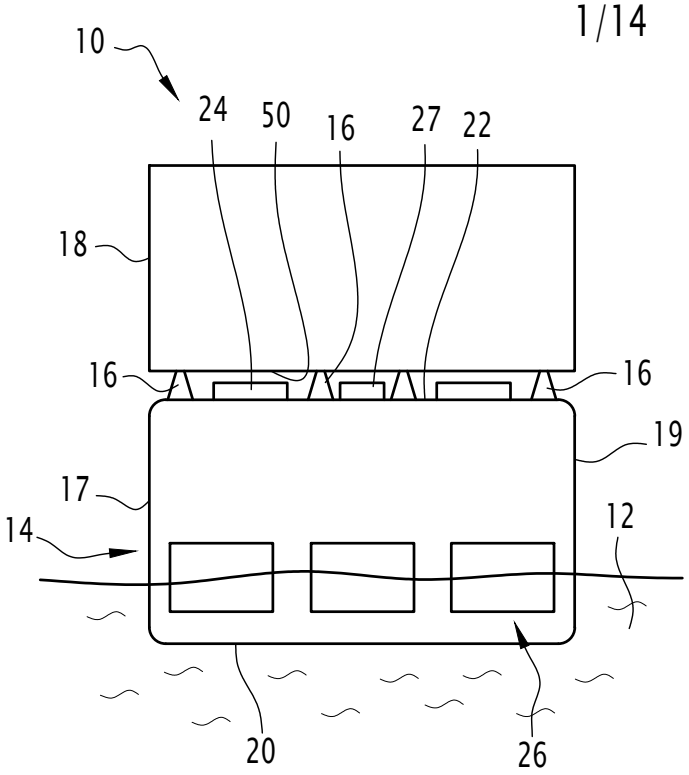
10
24
50
16
27
22
18
16
16
19
17
14
12
20
26

FIG.1

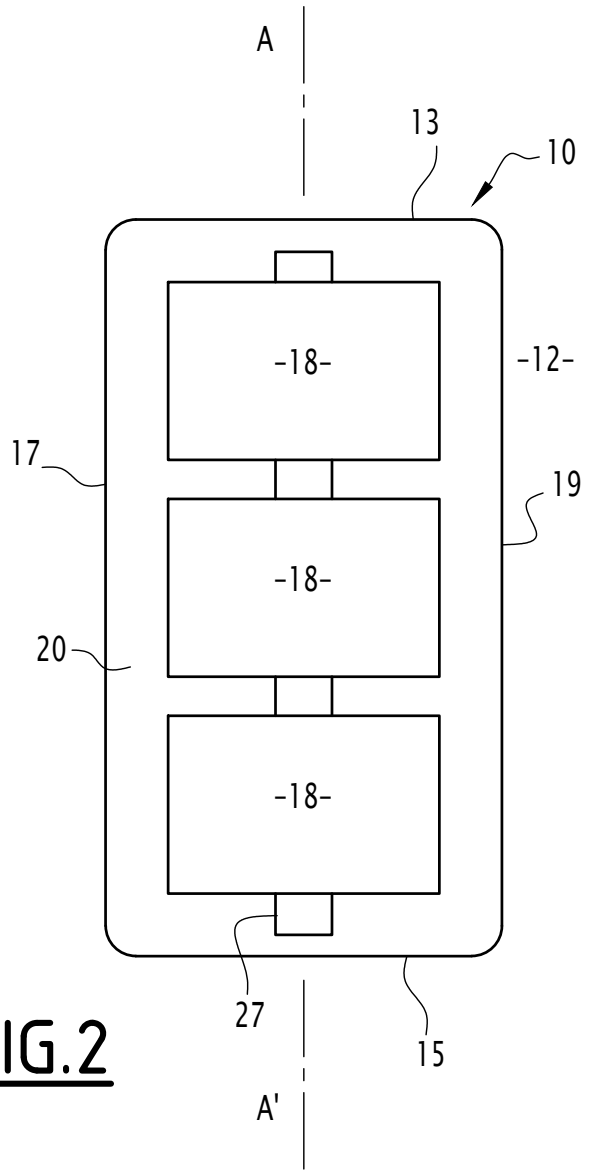
A
13
10
-18-
-12-
17
19
-18-
20
-18-
27
15
A'

FIG.2

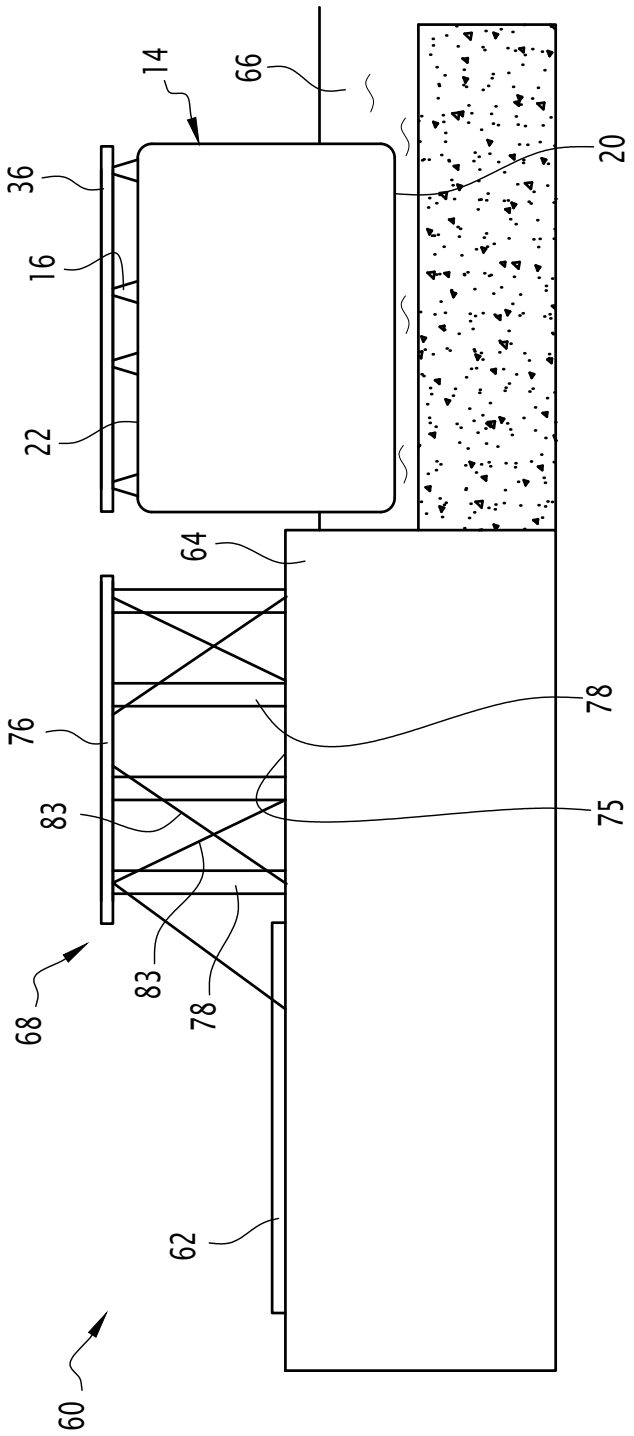

FIG.3

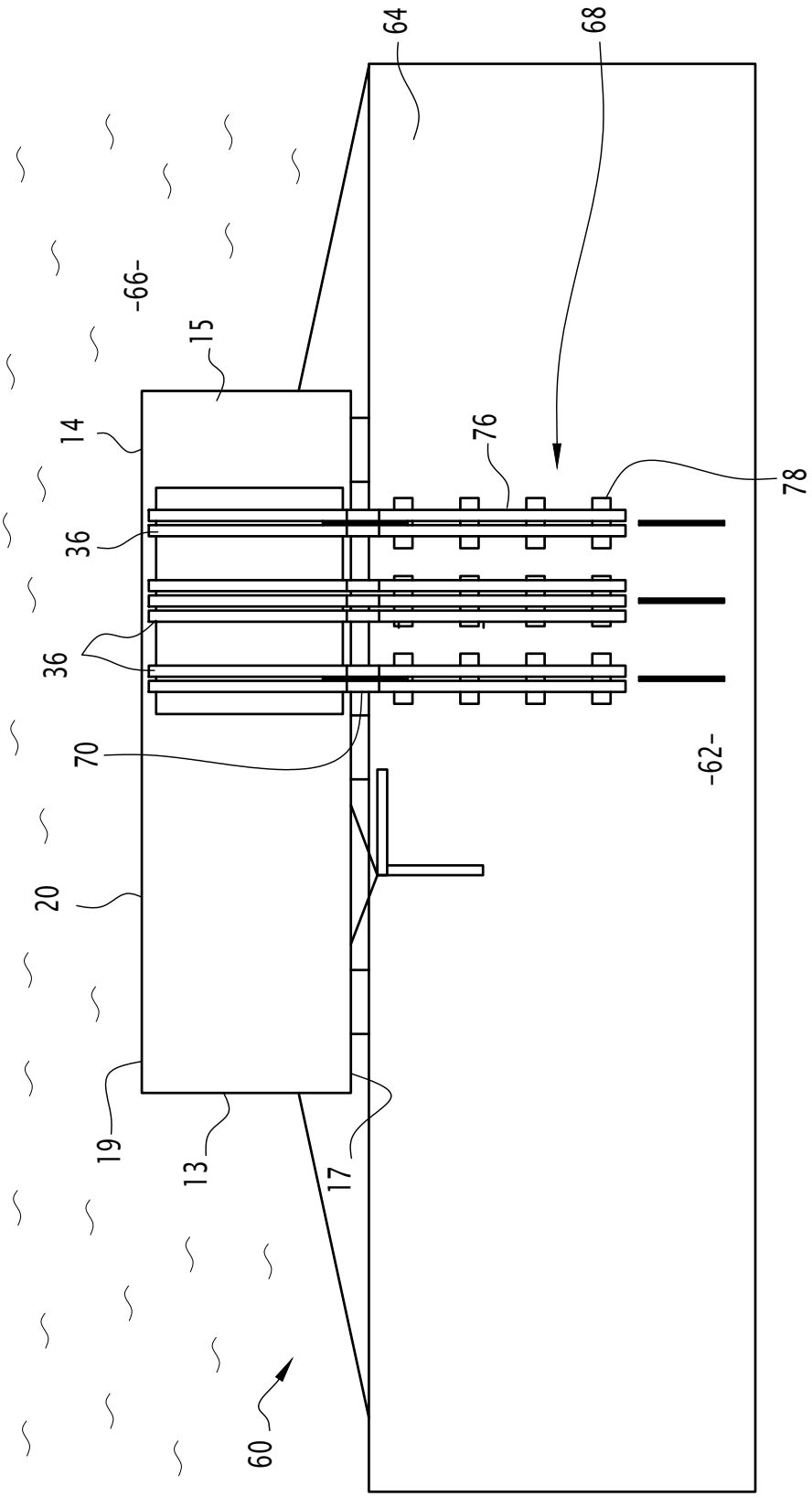

FIG.4

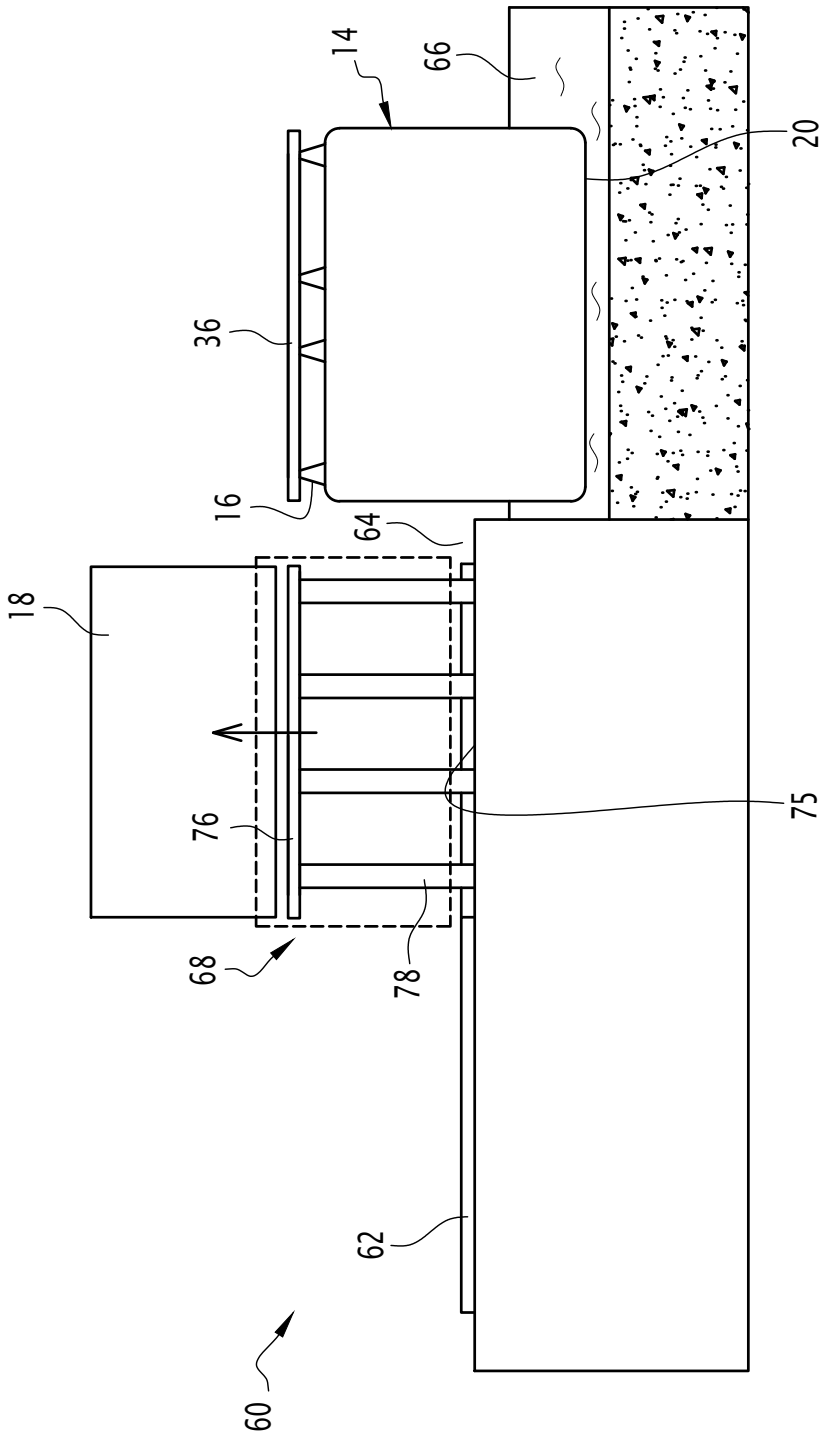

FIG.5

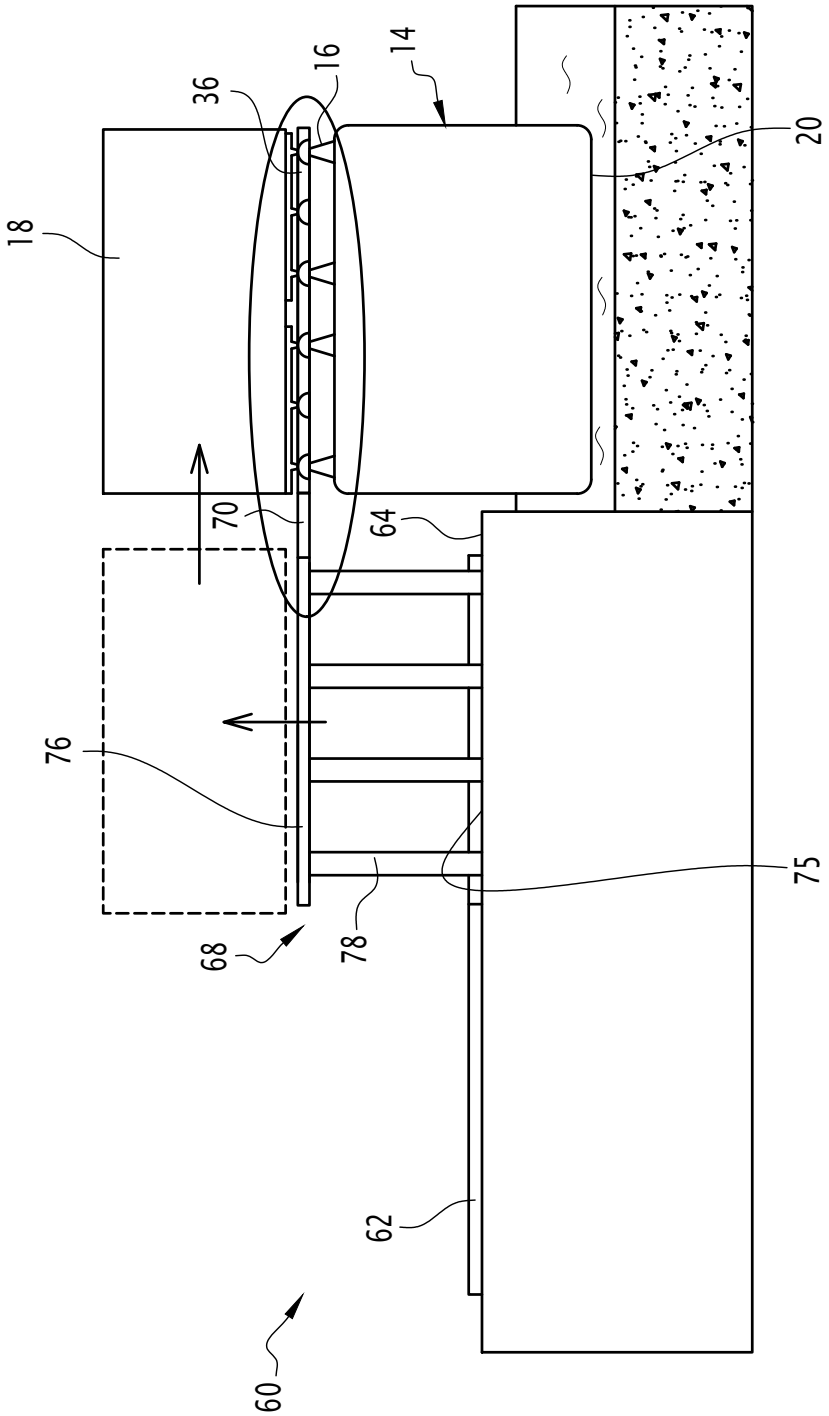

FIG.6

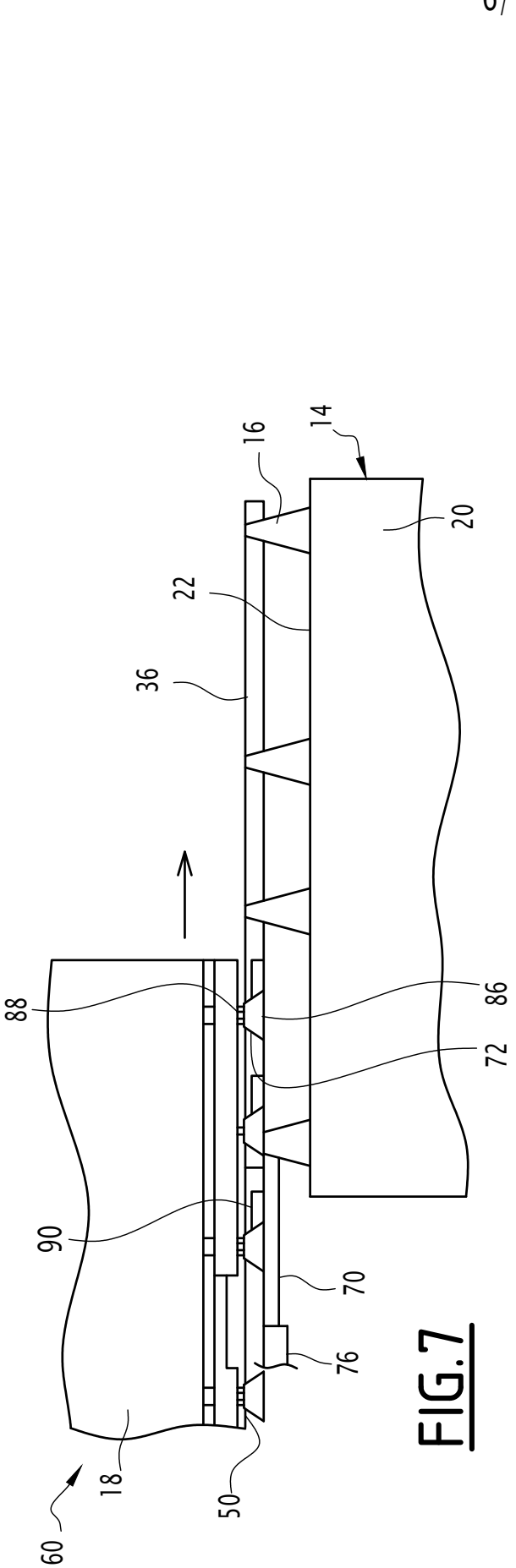
60
18
50
70
76
90
88
86
72
36
22
16
14
20

FIG.7

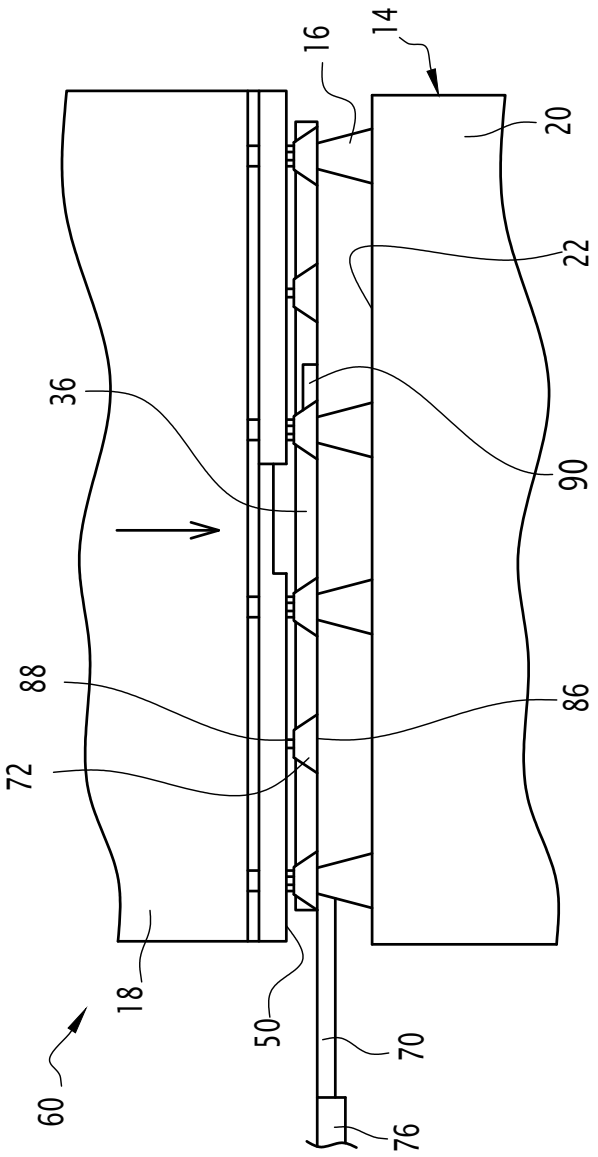
60
18
50
70
76
36
88
72
90
86
22
16
14
20

FIG.8

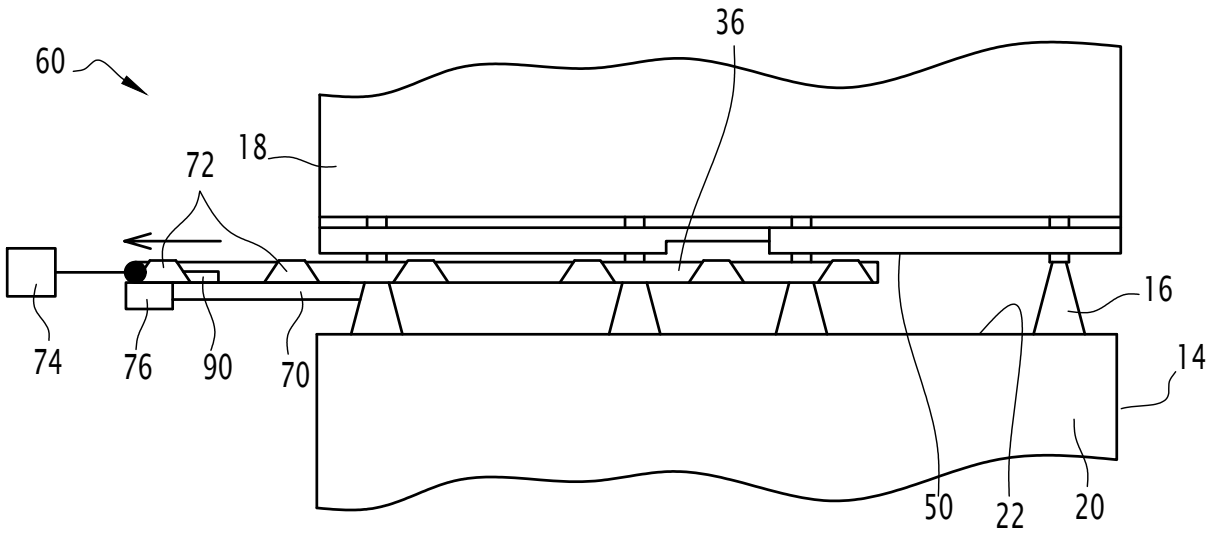

FIG.9

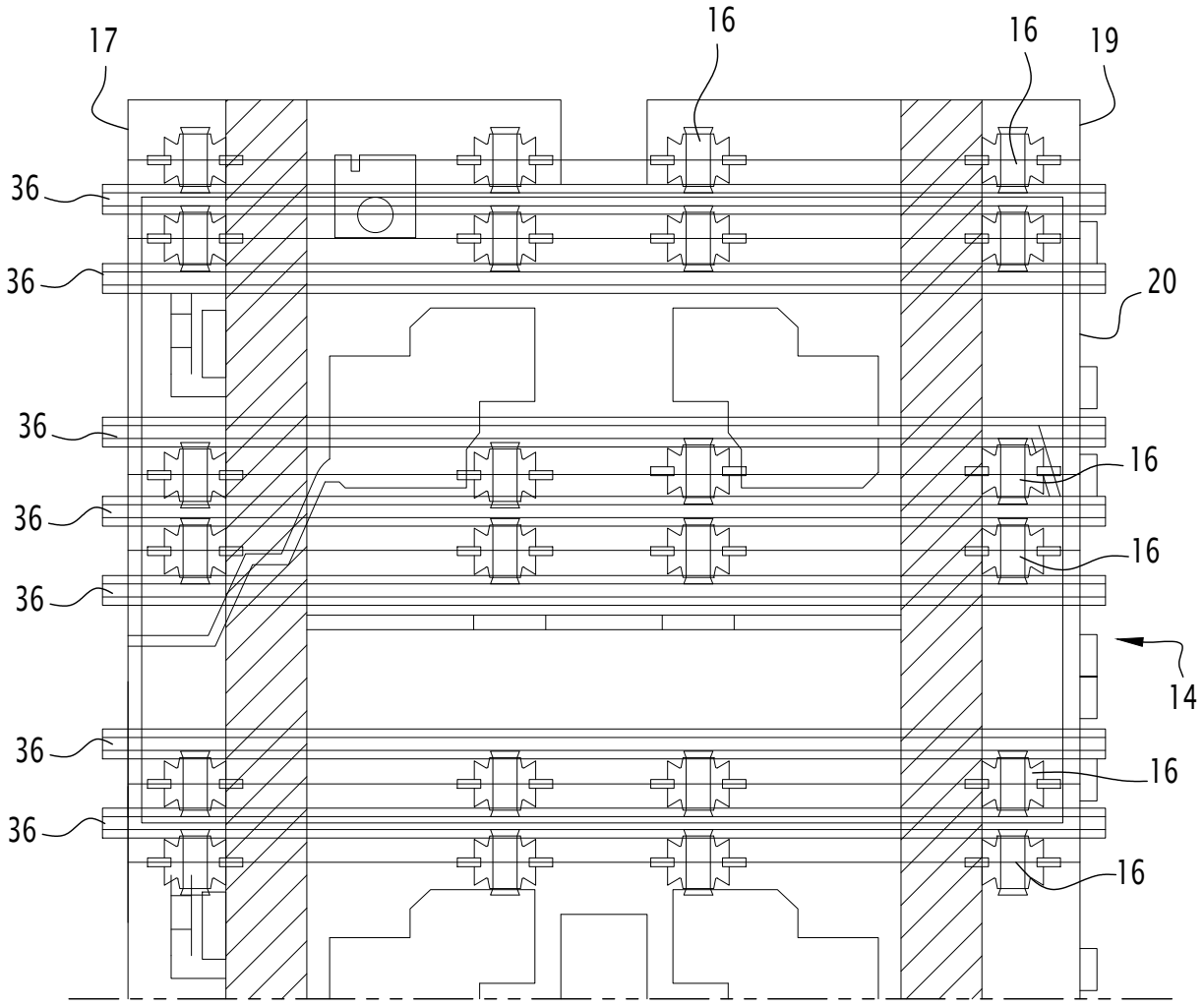

FIG.10

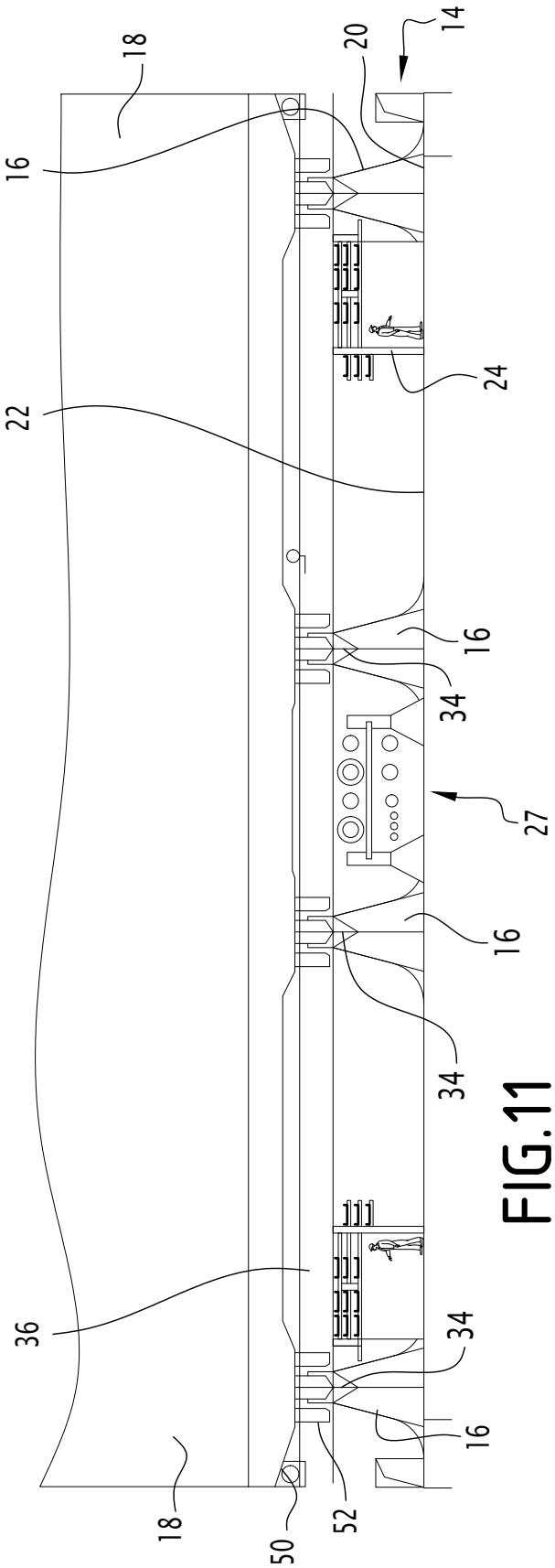
18
20
14
16
22
24
16
34
27
16
34
36
34
16
18
50
52

FIG.11

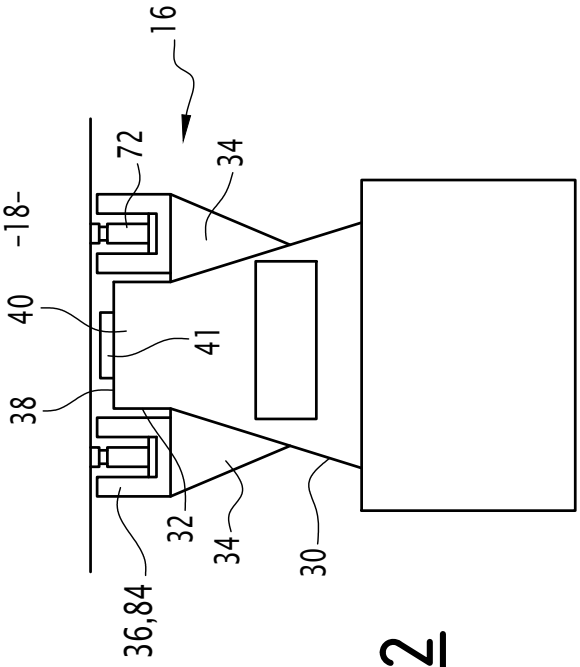
16
72
34
-18-
40
41
38
32
34
30
36,84

FIG.12

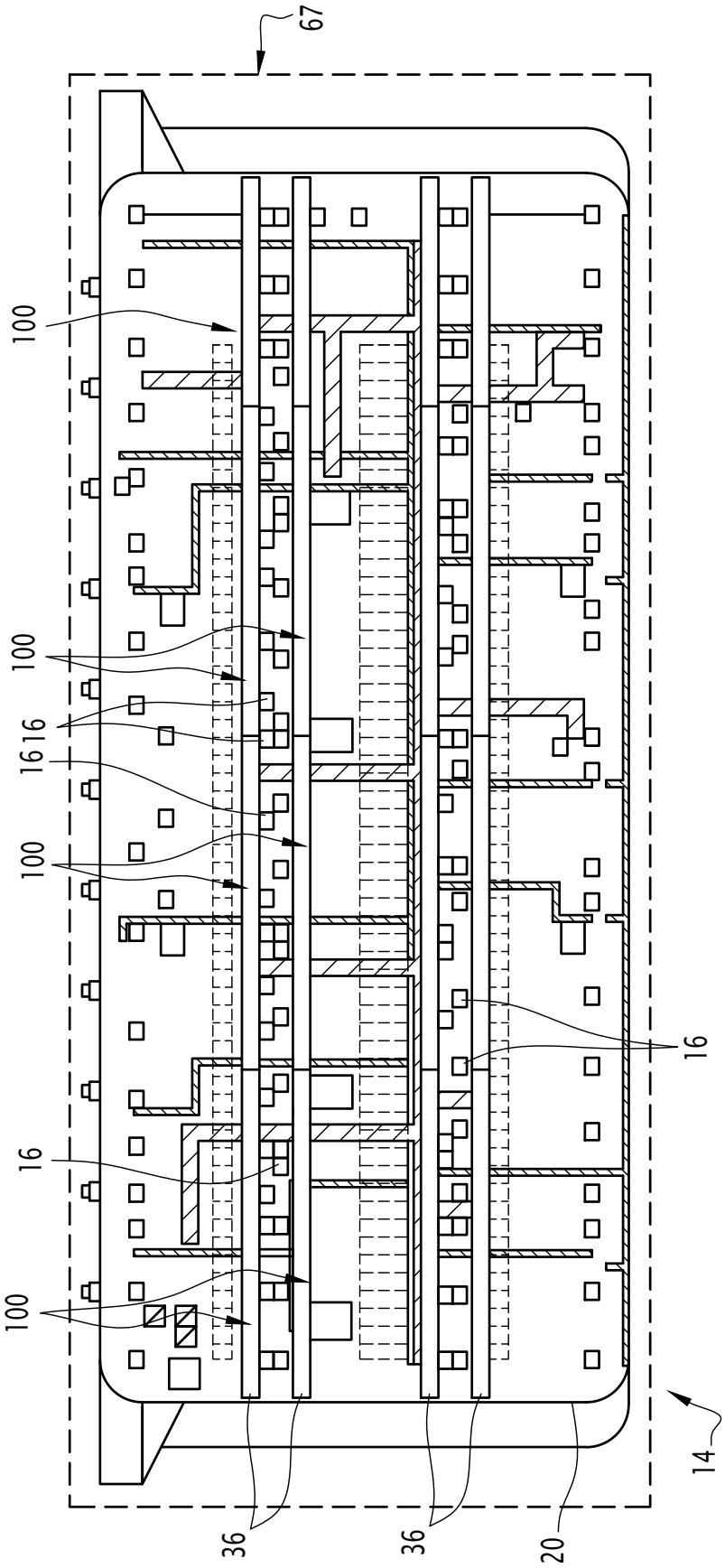

FIG.13

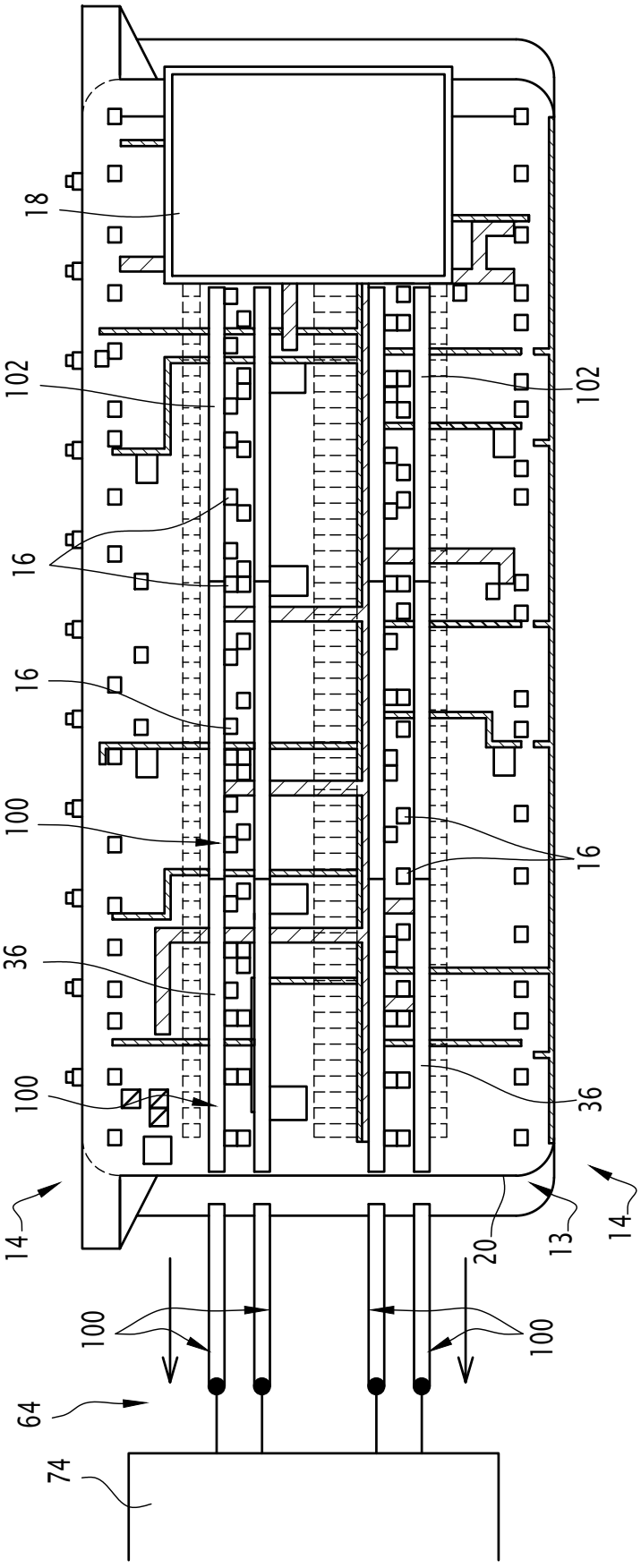

FIG.14

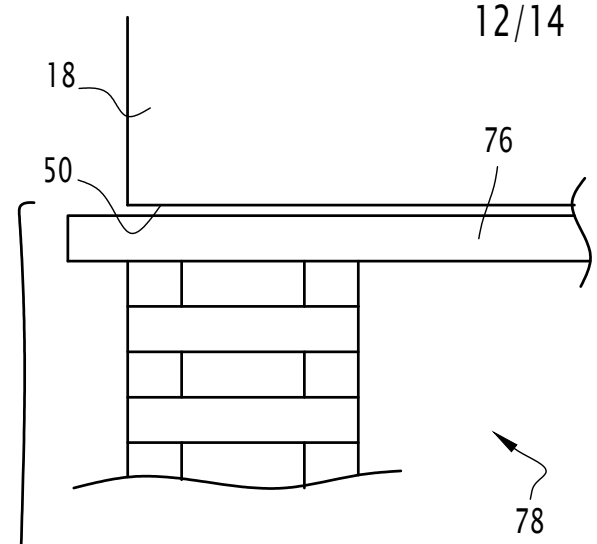
18
76
50
78

FIG.15

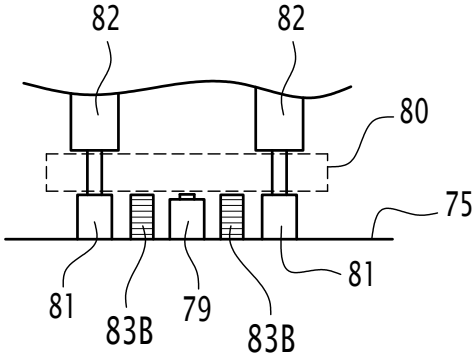
82
82
80
75
81
81
83B
79
83B

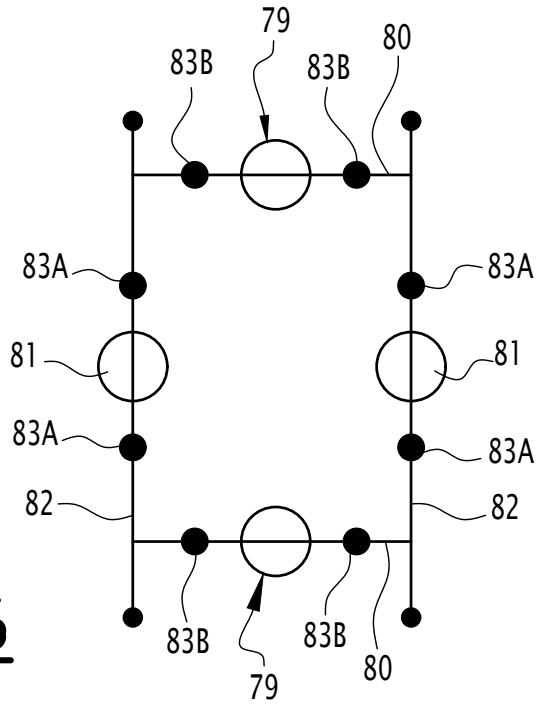
79
83B
83B
80
83A
83A
81
81
83A
83A
82
82
83B
83B
80
79

FIG.16

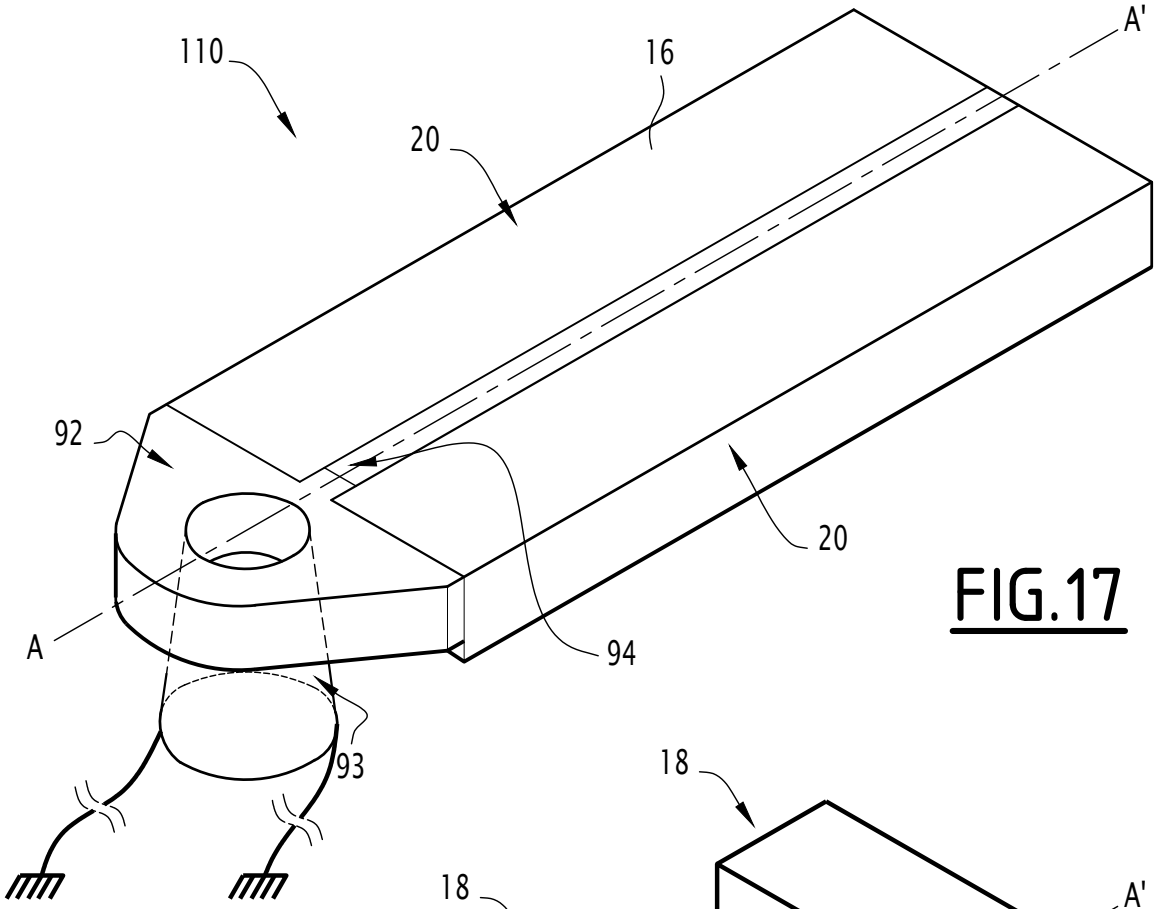

FIG.17

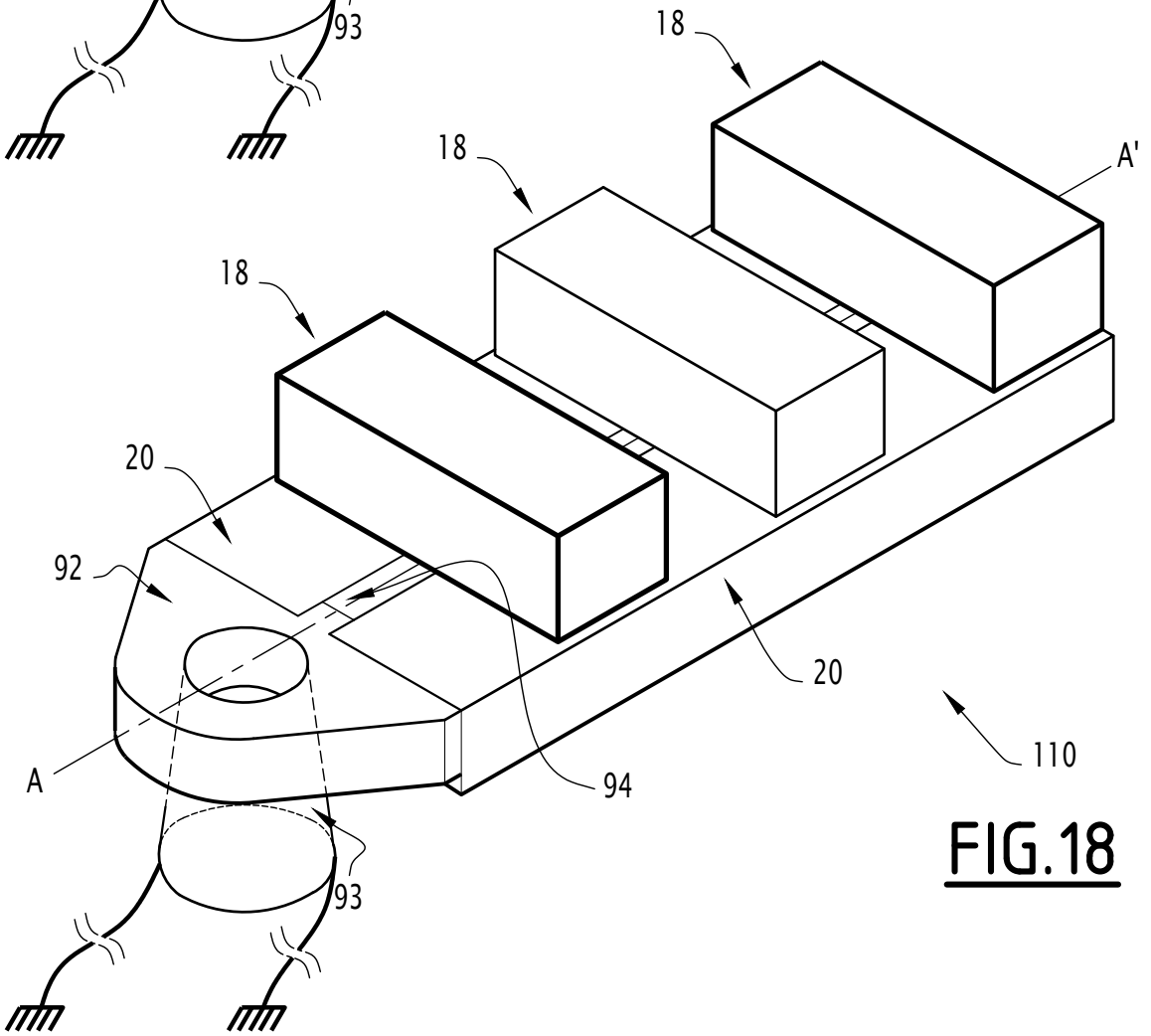

FIG.18

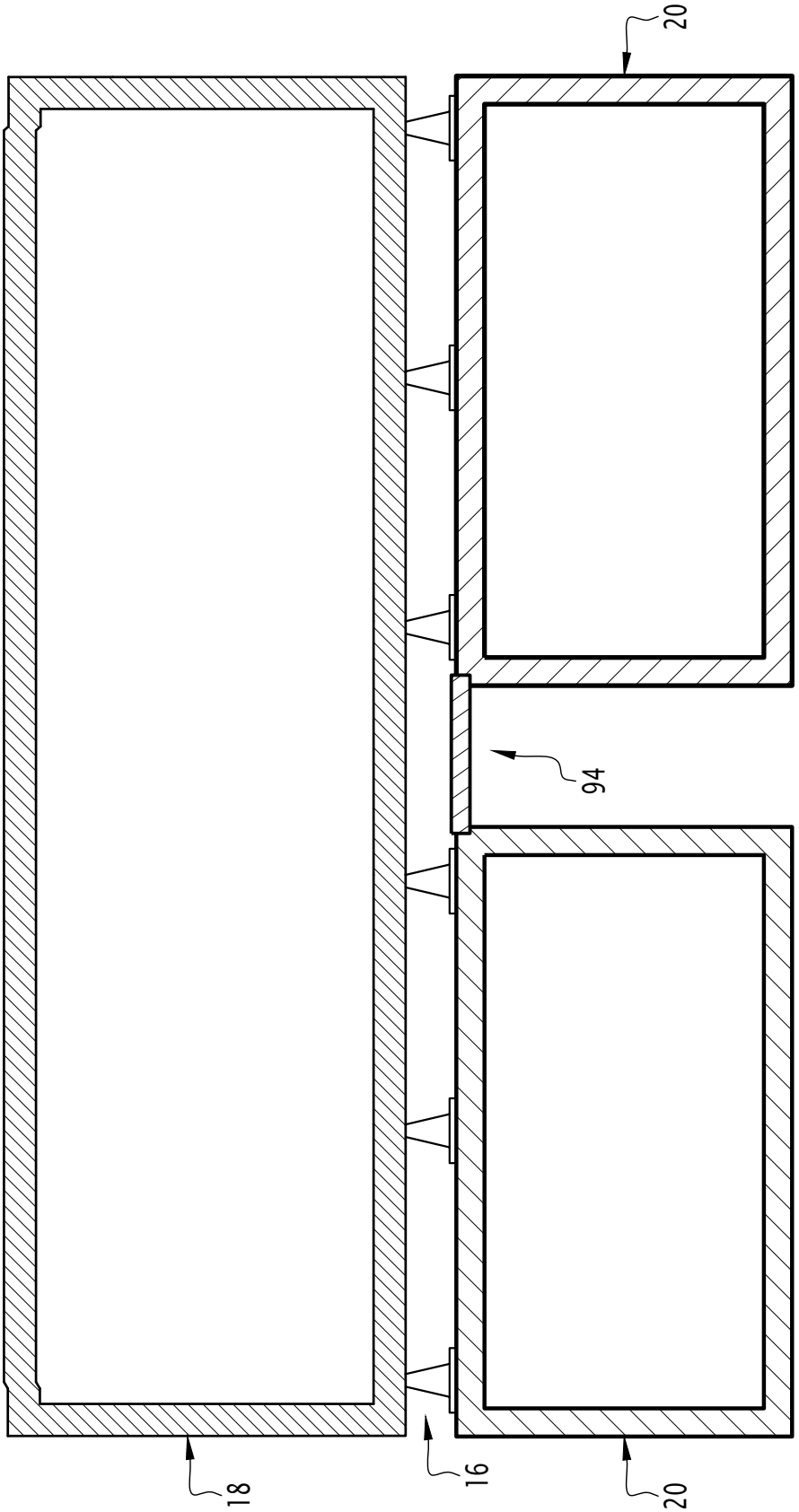

FIG.19