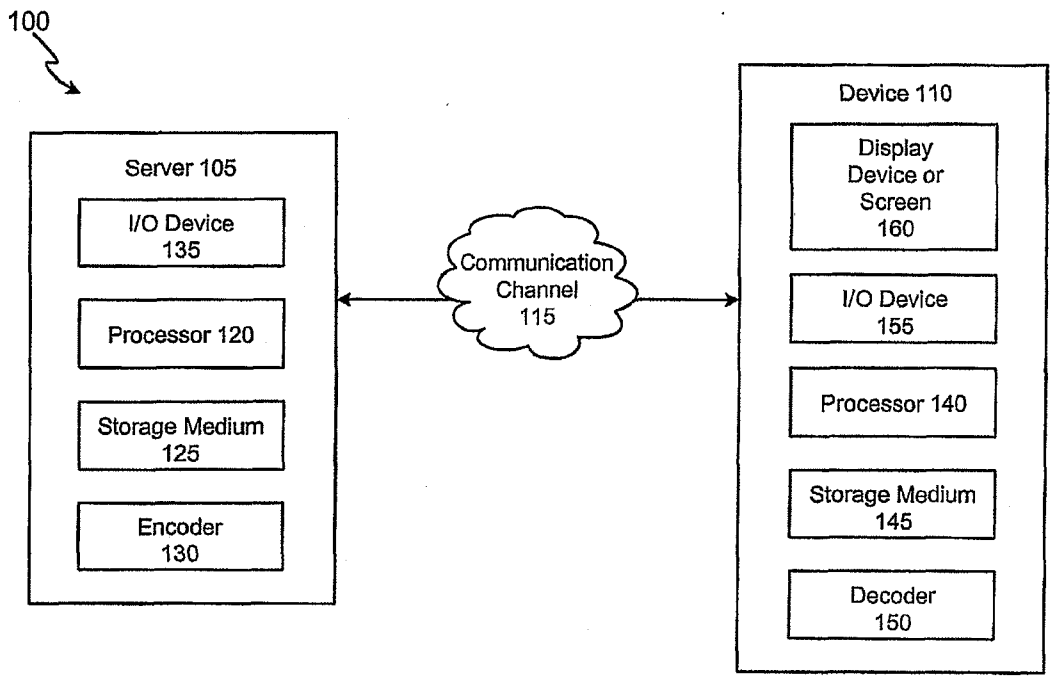
100
Server 105
I/O Device 135
Processor 120
Storage Medium 125
Encoder 130
Communication Channel 115
Device 110
Display Device or Screen 160
I/O Device 155
Processor 140
Storage Medium 145
Decoder 150

FIG. 1

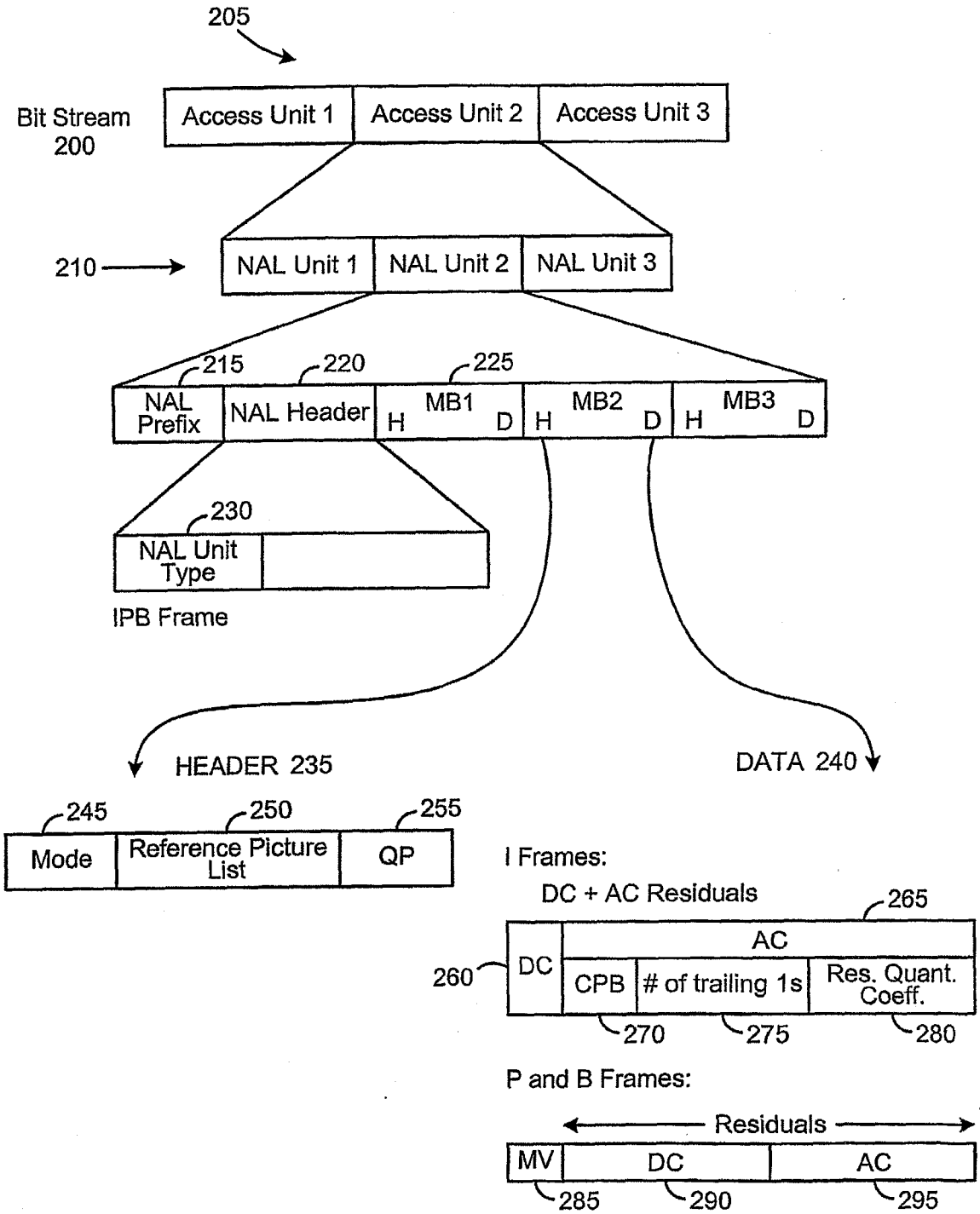
205
Bit Stream 200
Access Unit 1
Access Unit 2
Access Unit 3
210
NAL Unit 1
NAL Unit 2
NAL Unit 3
215
220
225
NAL Prefix
NAL Header
MB1
H
D
MB2
H
D
MB3
H
D
230
NAL Unit Type
IPB Frame
HEADER 235
DATA 240
245
250
255
Mode
Reference Picture List
QP
I Frames:
DC + AC Residuals
265
260
DC
AC
CPB
# of trailing 1s
Res. Quant. Coeff.
270
275
280
P and B Frames:
Residuals
MV
DC
AC
285
290
295

FIG. 2

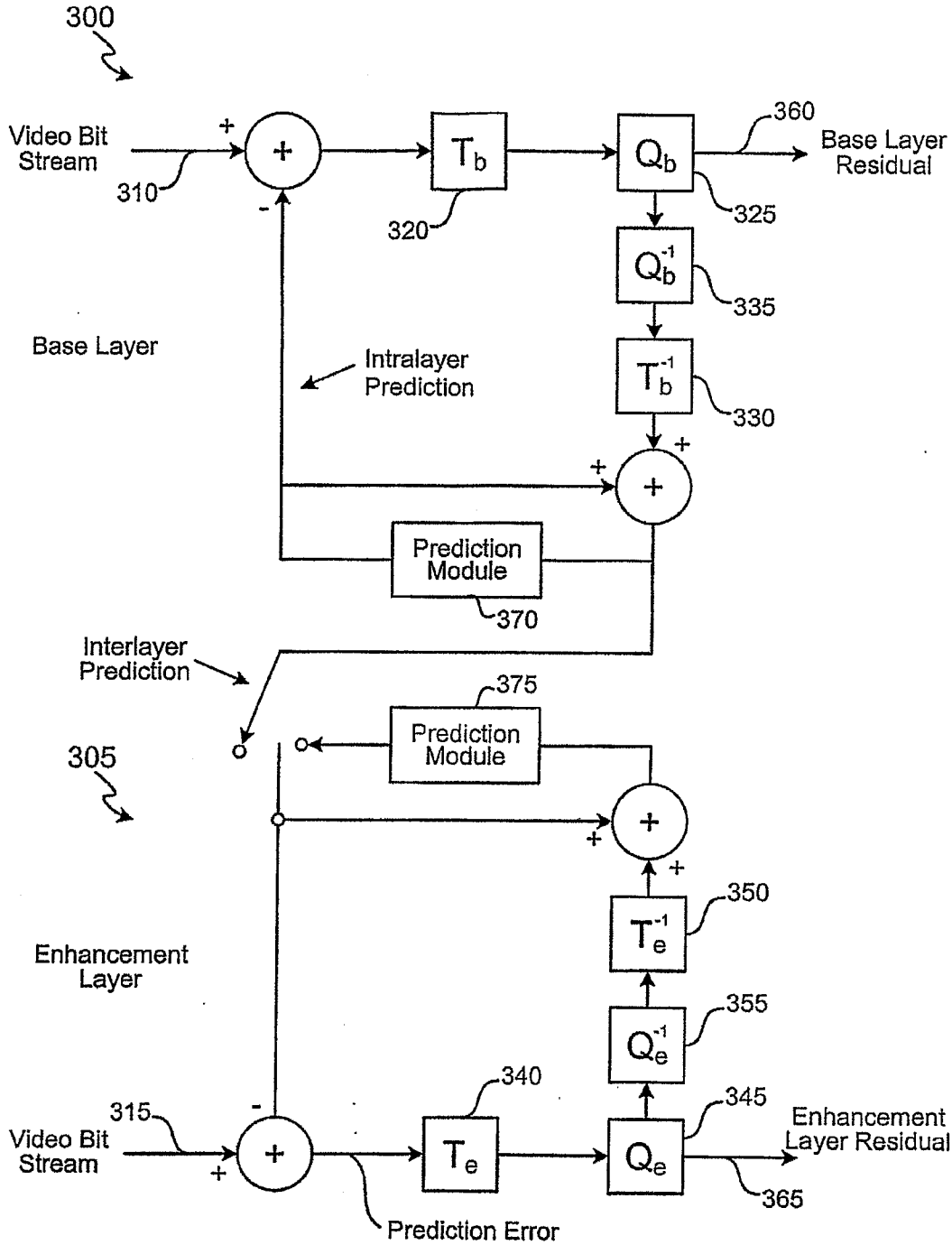
300
Video Bit Stream
310
+
-
T_b
320
Q_b
360
Base Layer Residual
325
Q_b^{-1}
335
T_b^{-1}
330
Base Layer
Intralayer Prediction
Prediction Module
370
Interlayer Prediction
375
Prediction Module
305
Enhancement Layer
T_e^{-1}
350
Q_e^{-1}
355
340
345
315
Video Bit Stream
T_e
Q_e
Enhancement Layer Residual
365
Prediction Error

FIG. 3

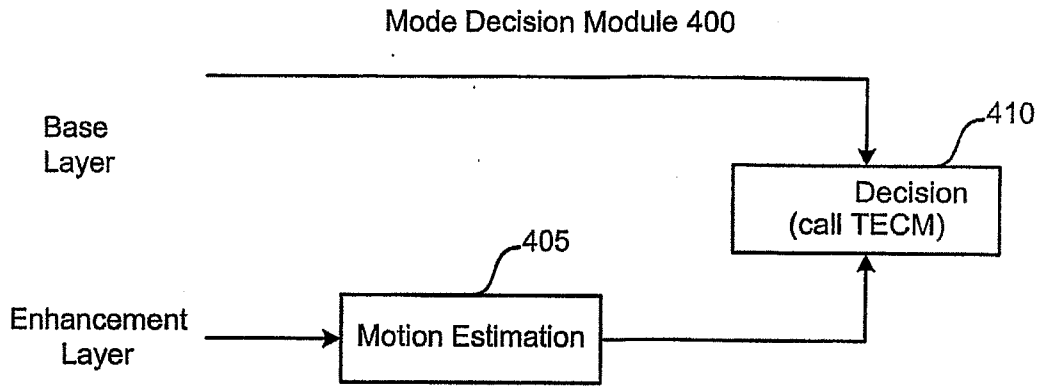
Mode Decision Module 400
Base Layer
410
Decision (call TECM)
405
Enhancement Layer
Motion Estimation

FIG. 4

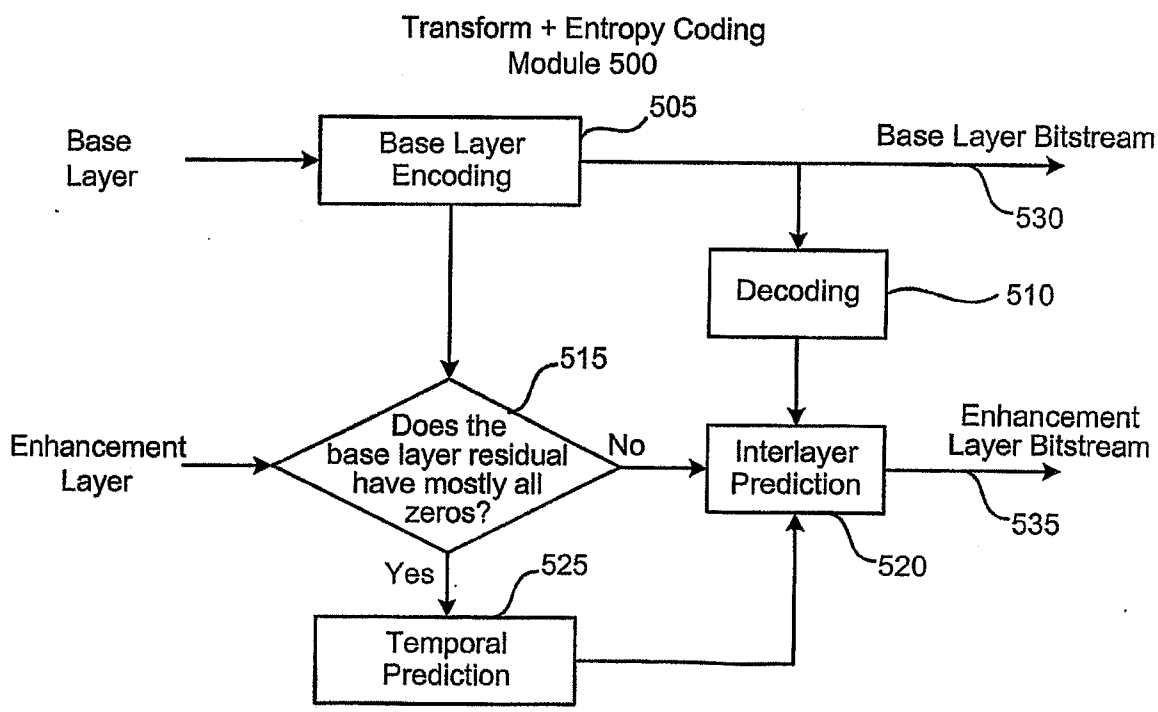
Transform + Entropy Coding Module 500
Base Layer
505
Base Layer Encoding
Base Layer Bitstream
530
Decoding
510
515
Enhancement Layer
Does the base layer residual have mostly all zeros?
No
Interlayer Prediction
Enhancement Layer Bitstream
535
520
Yes
525
Temporal Prediction

FIG. 5

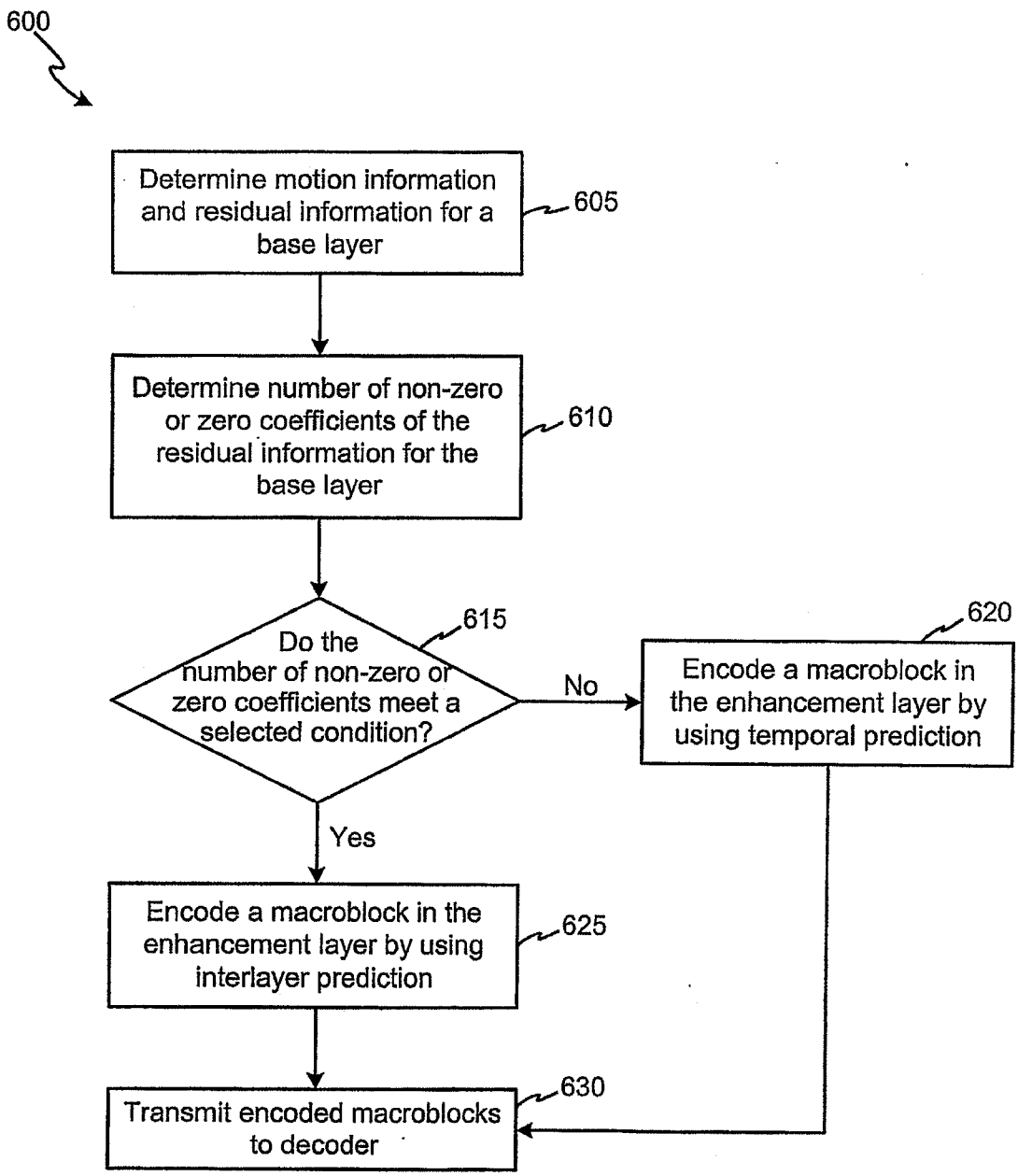
600
Determine motion information and residual information for a base layer
605
Determine number of non-zero or zero coefficients of the residual information for the base layer
610
Do the number of non-zero or zero coefficients meet a selected condition?
615
No
Yes
Encode a macroblock in the enhancement layer by using temporal prediction
620
Encode a macroblock in the enhancement layer by using interlayer prediction
625
Transmit encoded macroblocks to decoder
630

FIG. 6

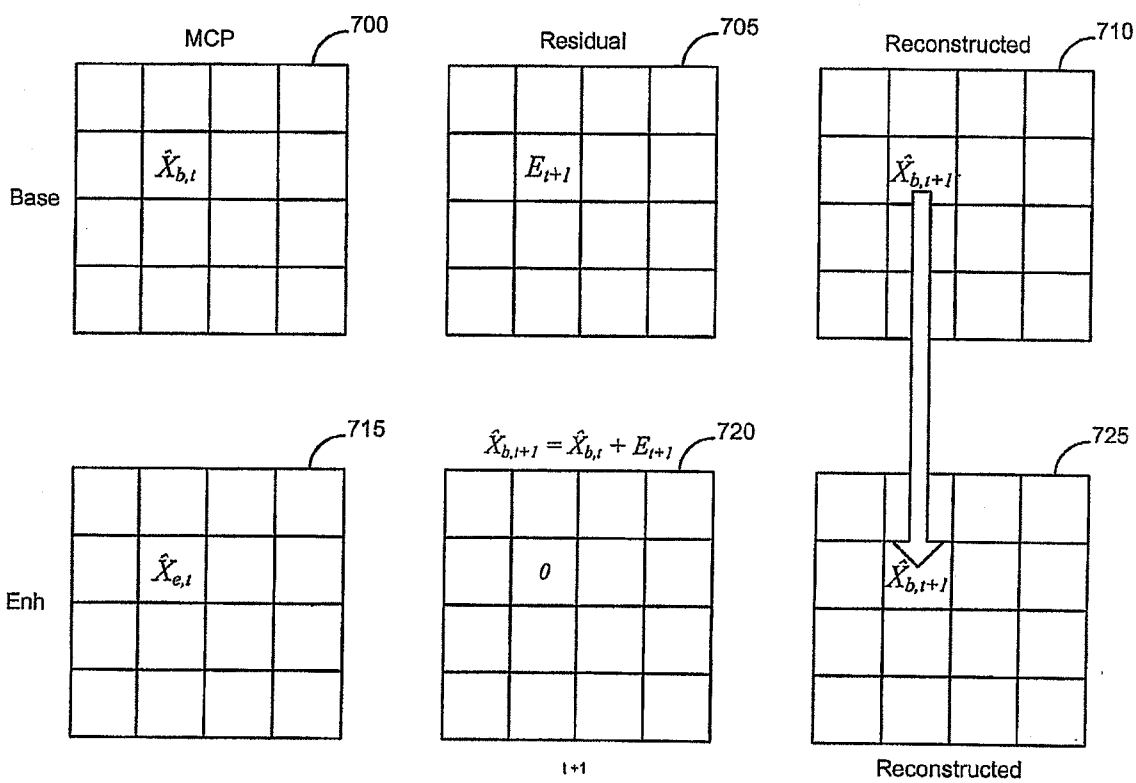
MCP
700
Residual
705
Reconstructed
710
Base
$\hat{X}_{b,t}$
E_{t+1}
$\hat{X}_{b,t+1}$
715
$\hat{X}_{b,t+1} = \hat{X}_{b,t} + E_{t+1}$
720
725
Enh
$\hat{X}_{e,t}$
0
$\hat{X}_{b,t+1}$
t+1
Reconstructed

FIG. 7

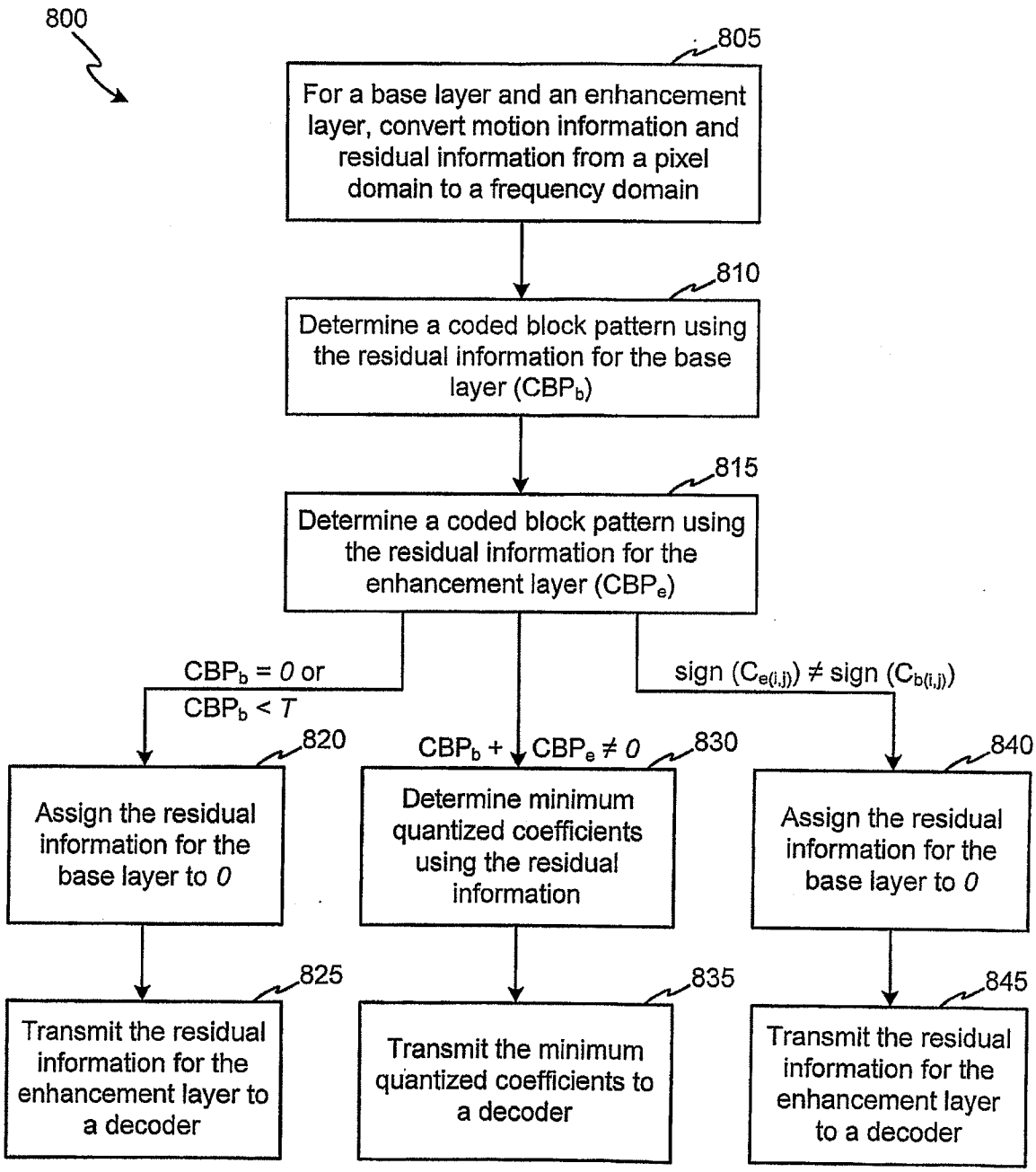
800
805
For a base layer and an enhancement layer, convert motion information and residual information from a pixel domain to a frequency domain
810
Determine a coded block pattern using the residual information for the base layer (CBP_b)
815
Determine a coded block pattern using the residual information for the enhancement layer (CBP_e)
$CBP_b = 0$ or $CBP_b < T$
$CBP_b + CBP_e \neq 0$
sign ($C_{e(i,j)}$) ≠ sign ($C_{b(i,j)}$)
820
Assign the residual information for the base layer to 0
830
Determine minimum quantized coefficients using the residual information
840
Assign the residual information for the base layer to 0
825
Transmit the residual information for the enhancement layer to a decoder
835
Transmit the minimum quantized coefficients to a decoder
845
Transmit the residual information for the enhancement layer to a decoder

FIG. 8

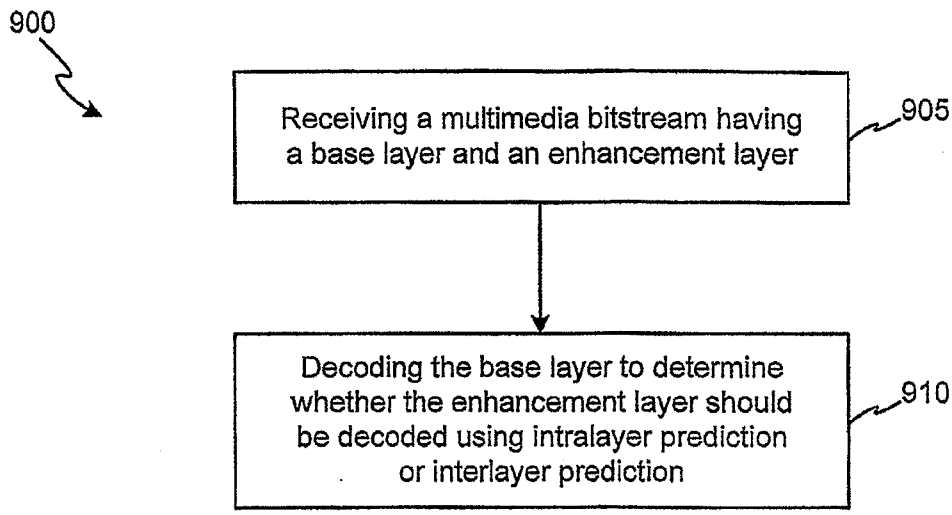
900
Receiving a multimedia bitstream having a base layer and an enhancement layer
905
Decoding the base layer to determine whether the enhancement layer should be decoded using intralayer prediction or interlayer prediction
910

FIG. 9

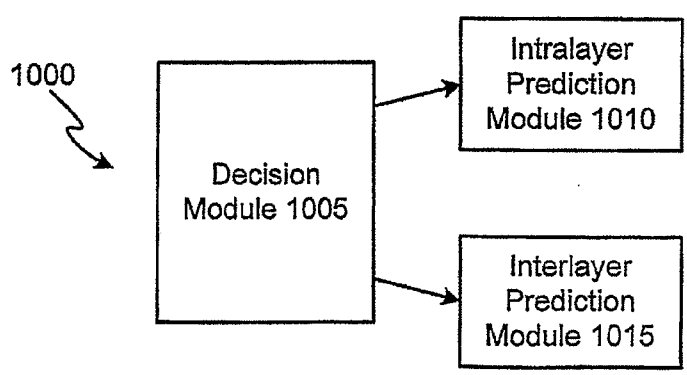
1000
Decision Module 1005
Intralayer Prediction Module 1010
Interlayer Prediction Module 1015

FIG. 10