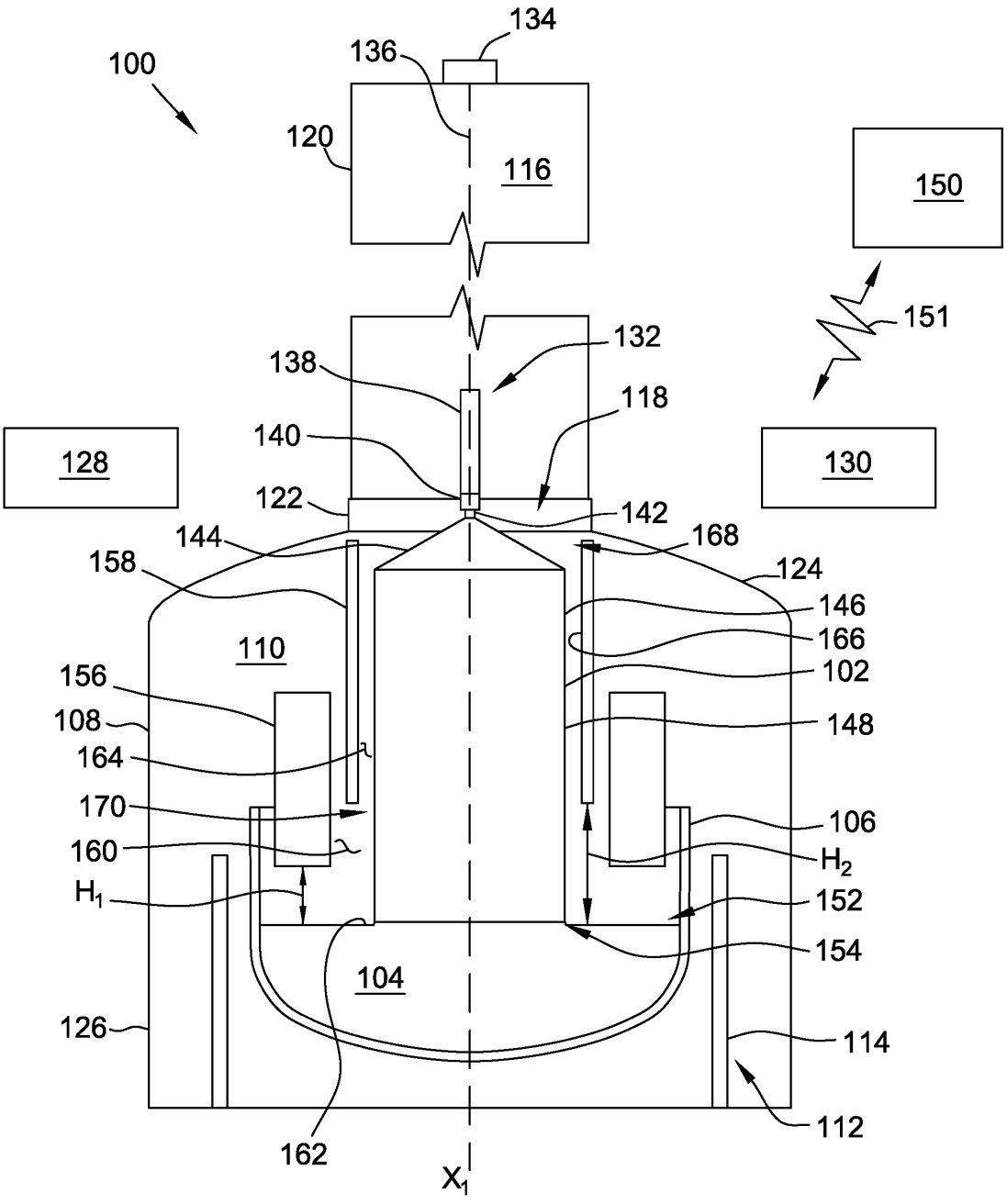
100
134
136
120
116
150
151
132
138
118
140
128
130
122
142
144
168
158
124
146
166
110
102
156
108
148
164
170
106
160
H_2
H_1
152
154
104
126
114
112
162
X_1

FIG. 1

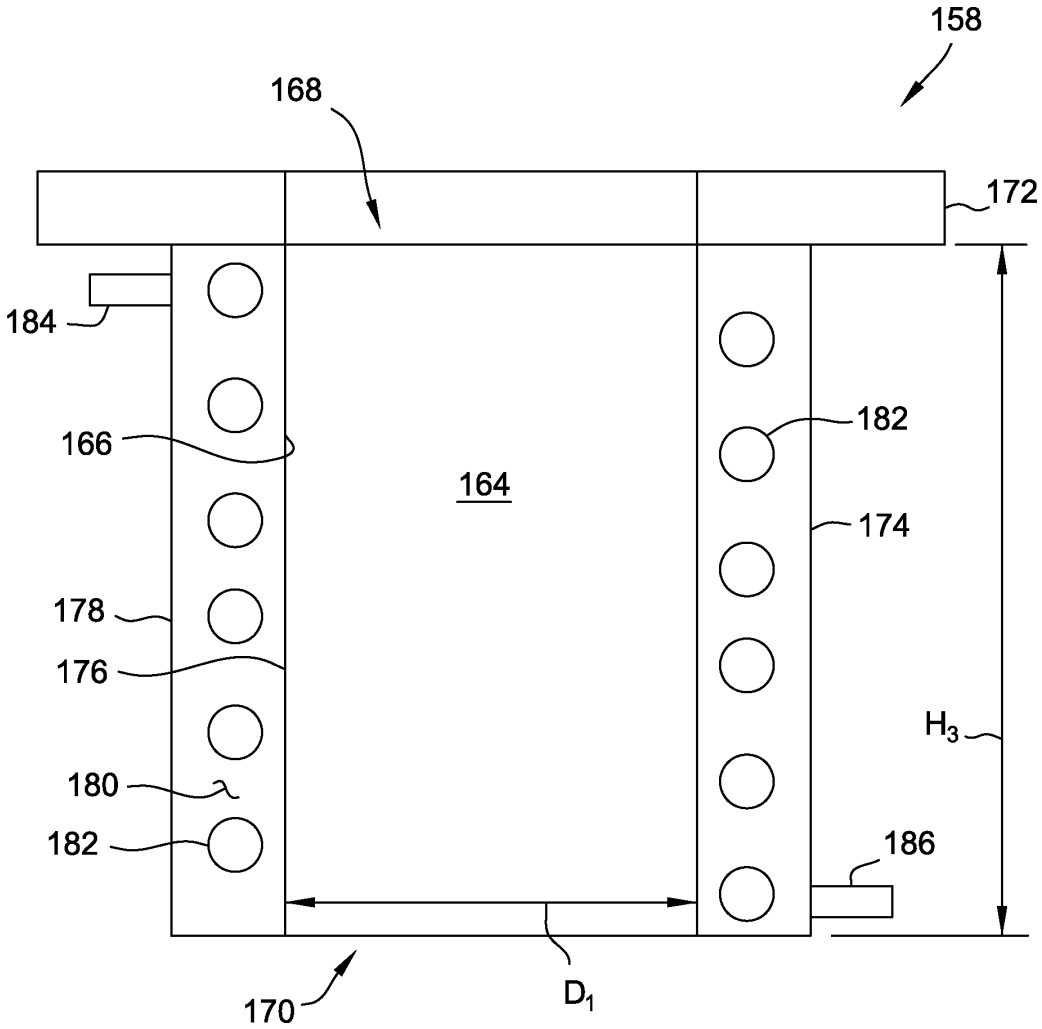

FIG. 2

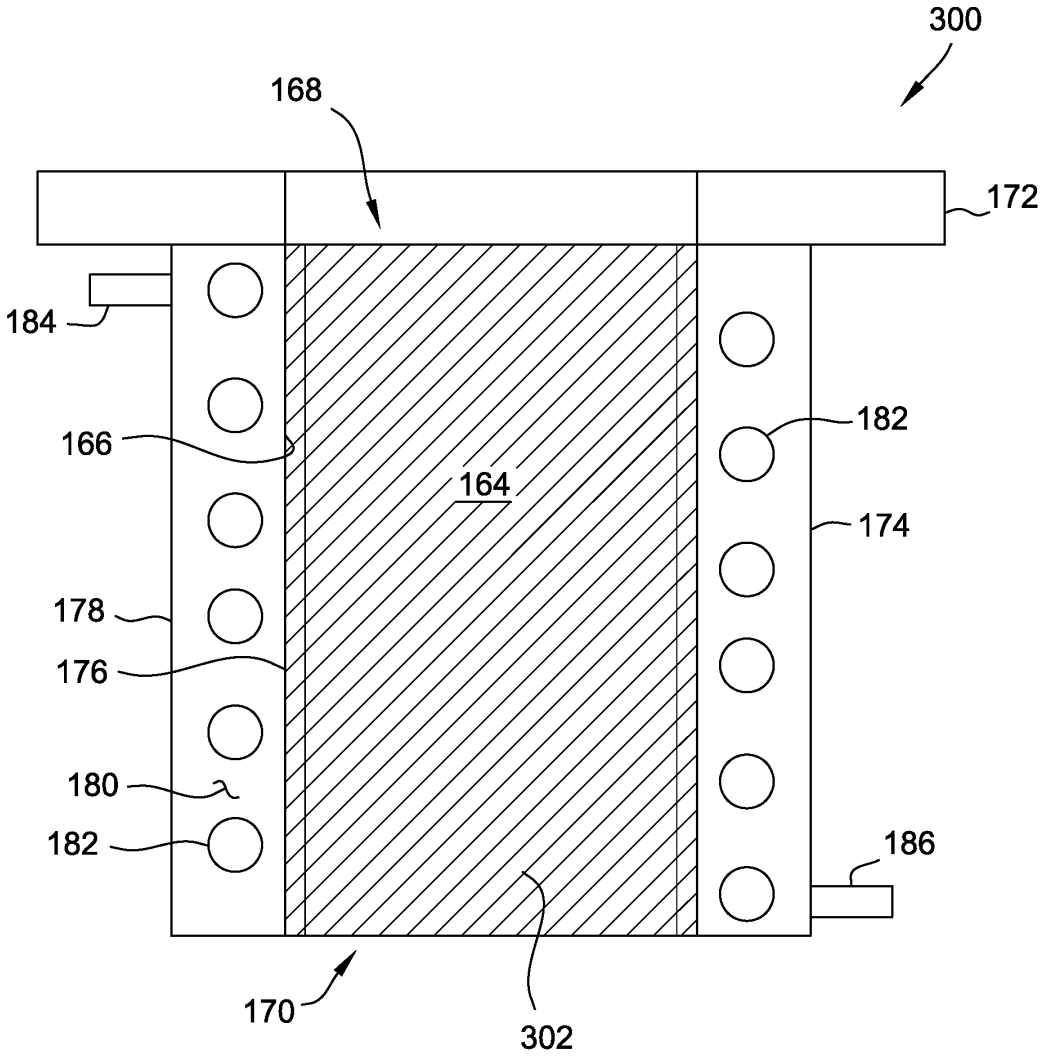

FIG. 3

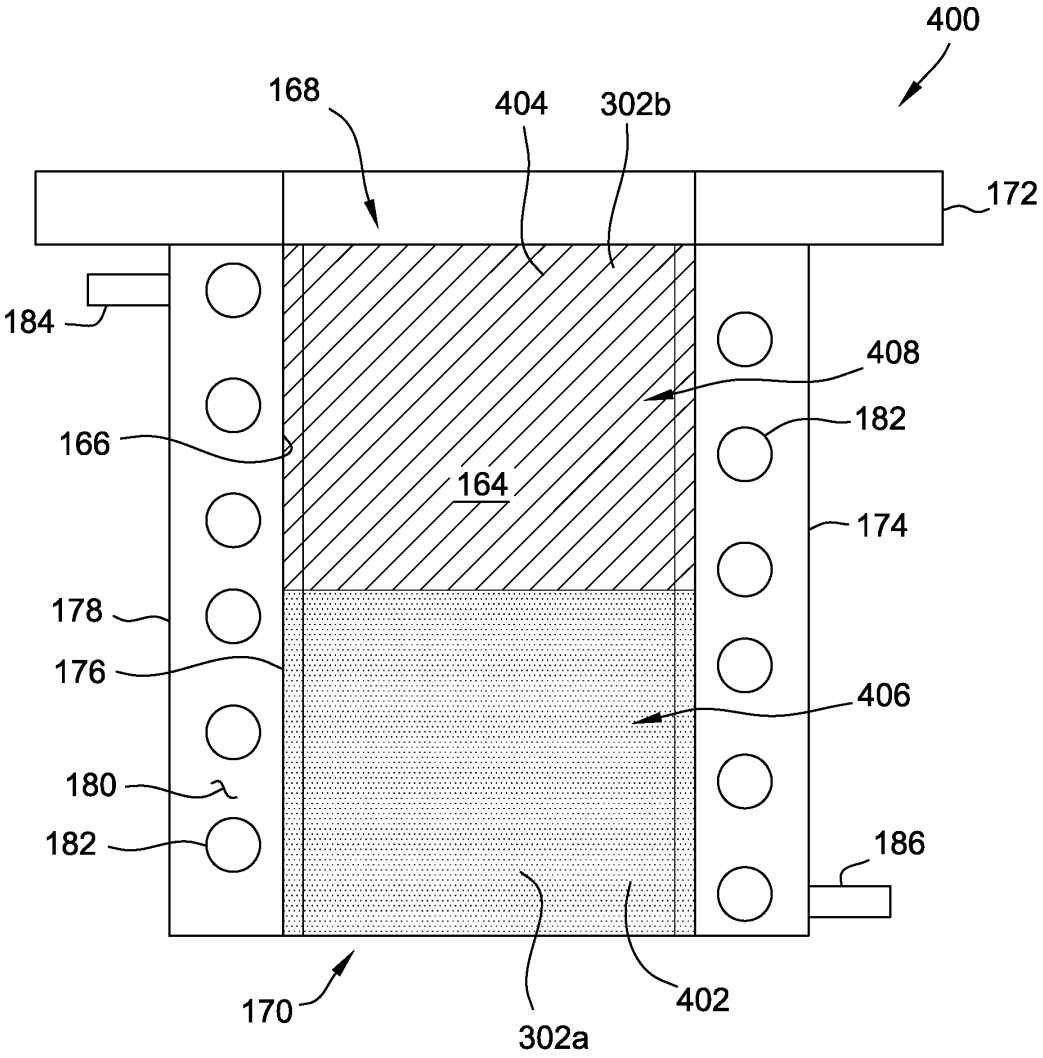
400
168
404
302b
172
184
408
166
182
164
174
178
176
406
180
182
186
170
302a
402

FIG. 4

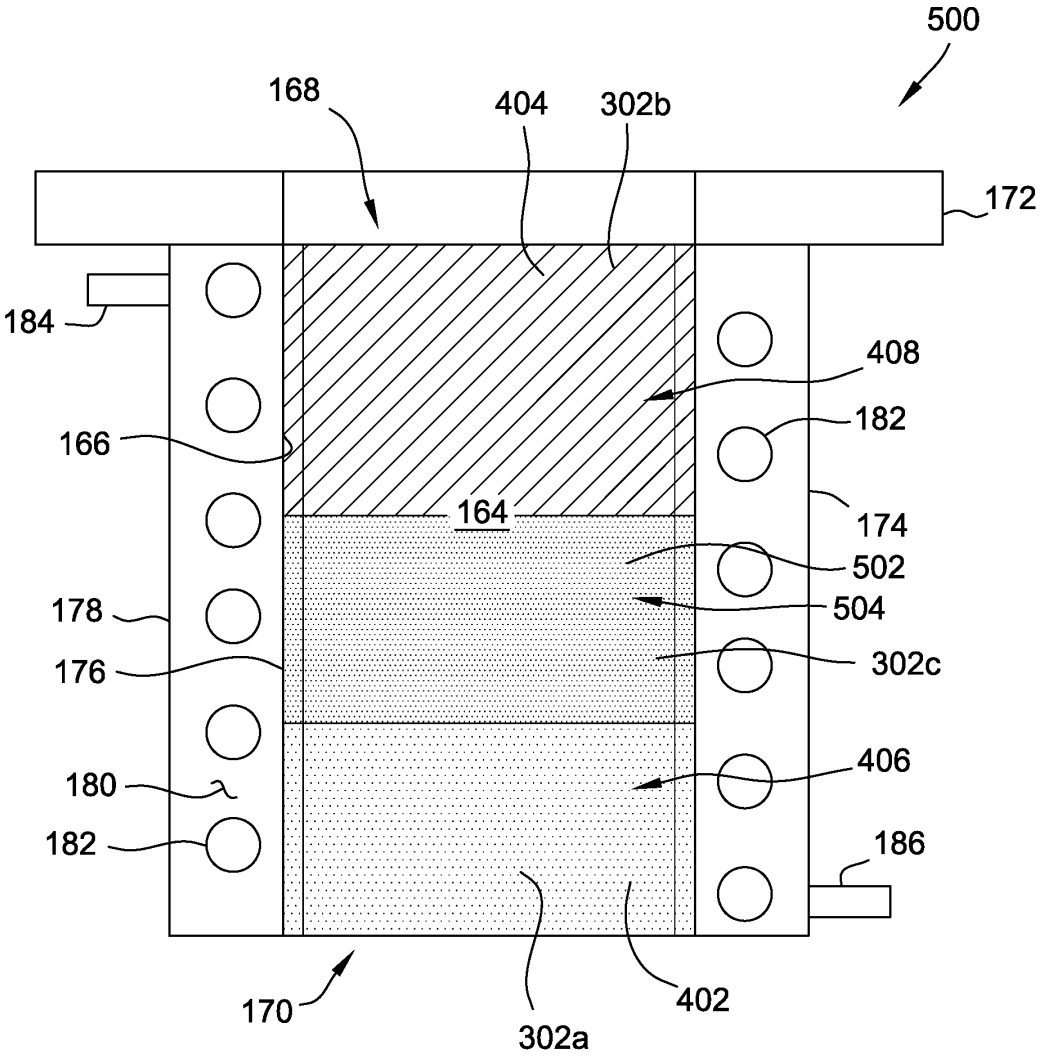
500
168
404
302b
172
184
408
166
182
164
174
502
178
504
176
302c
406
180
182
186
170
302a
402

FIG. 5

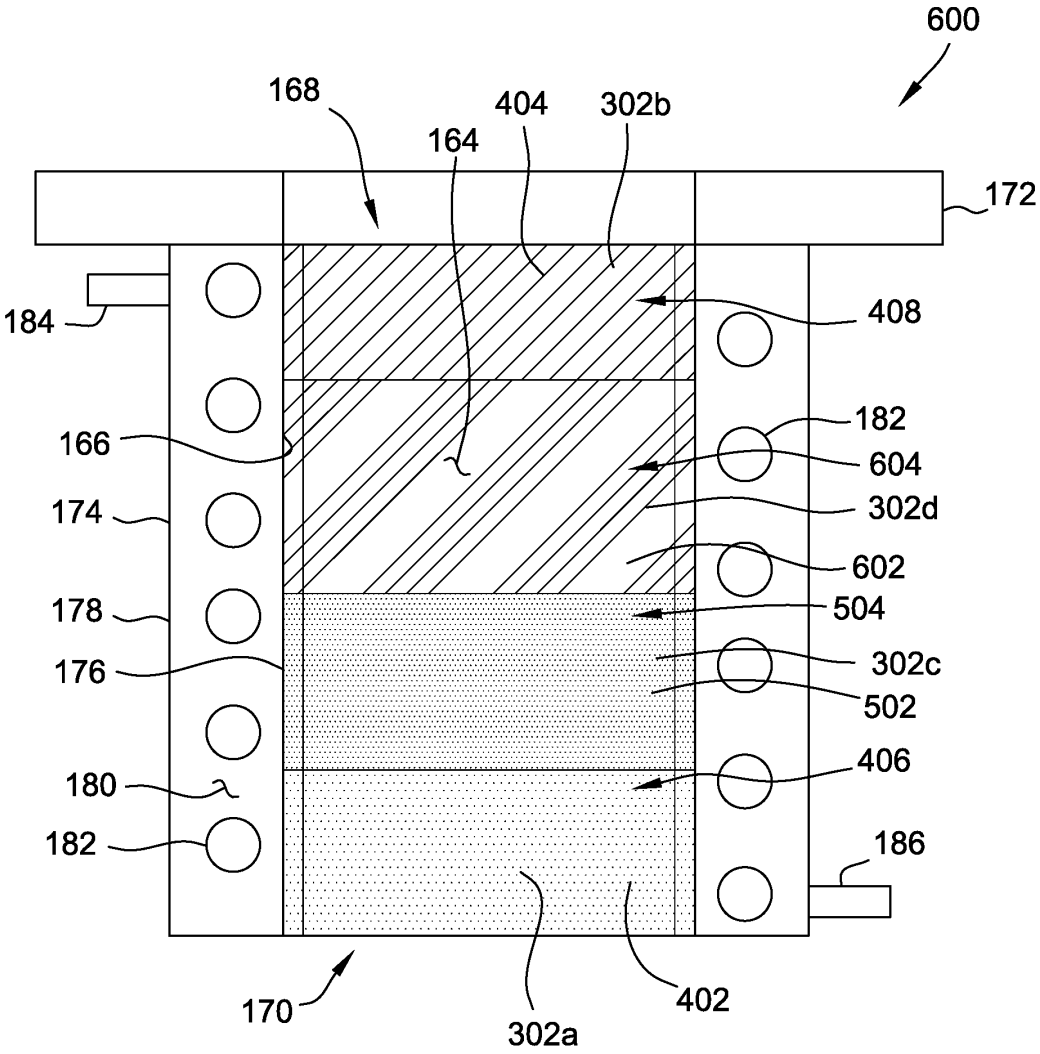
600
168
404
302b
164
172
184
408
166
182
604
174
302d
602
178
504
176
302c
502
180
406
182
186
170
302a
402

FIG. 6

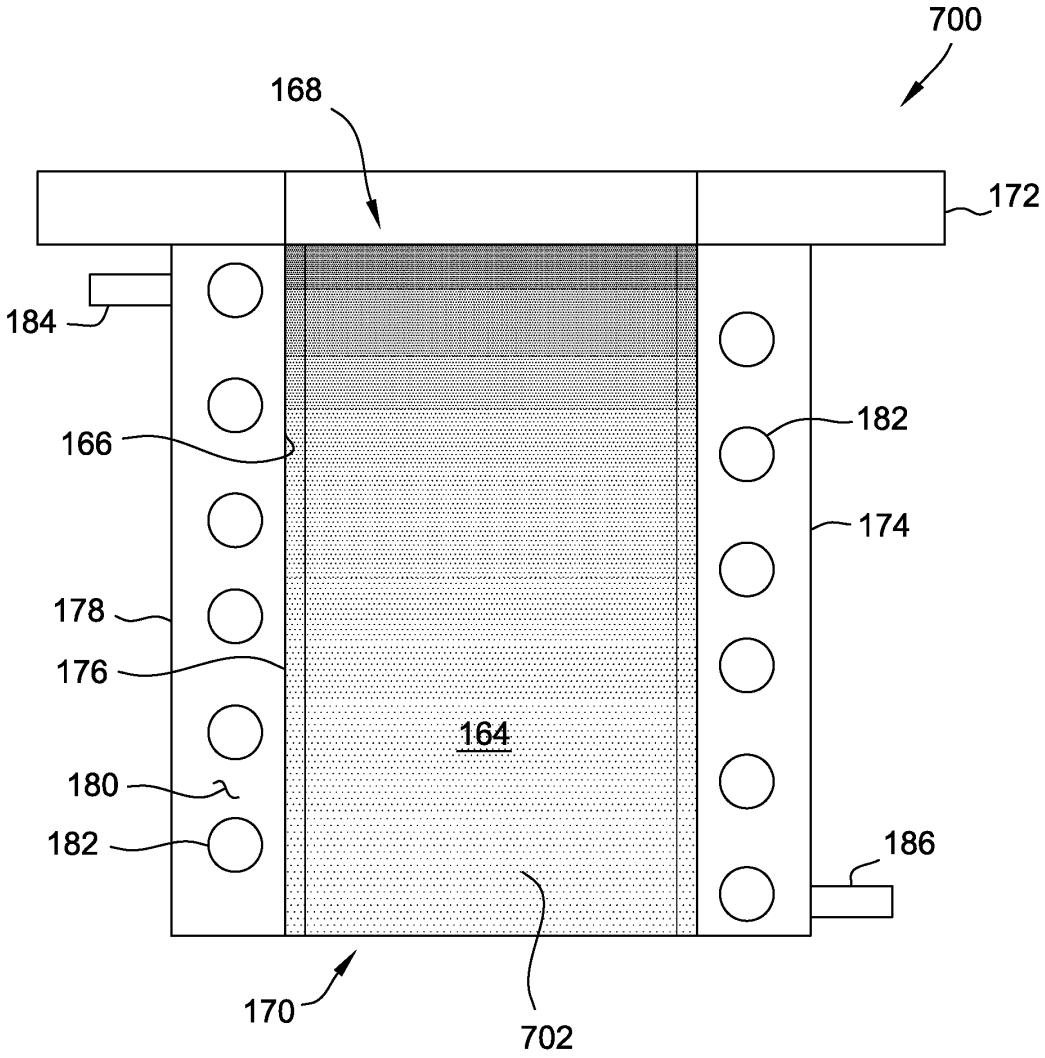

FIG. 7

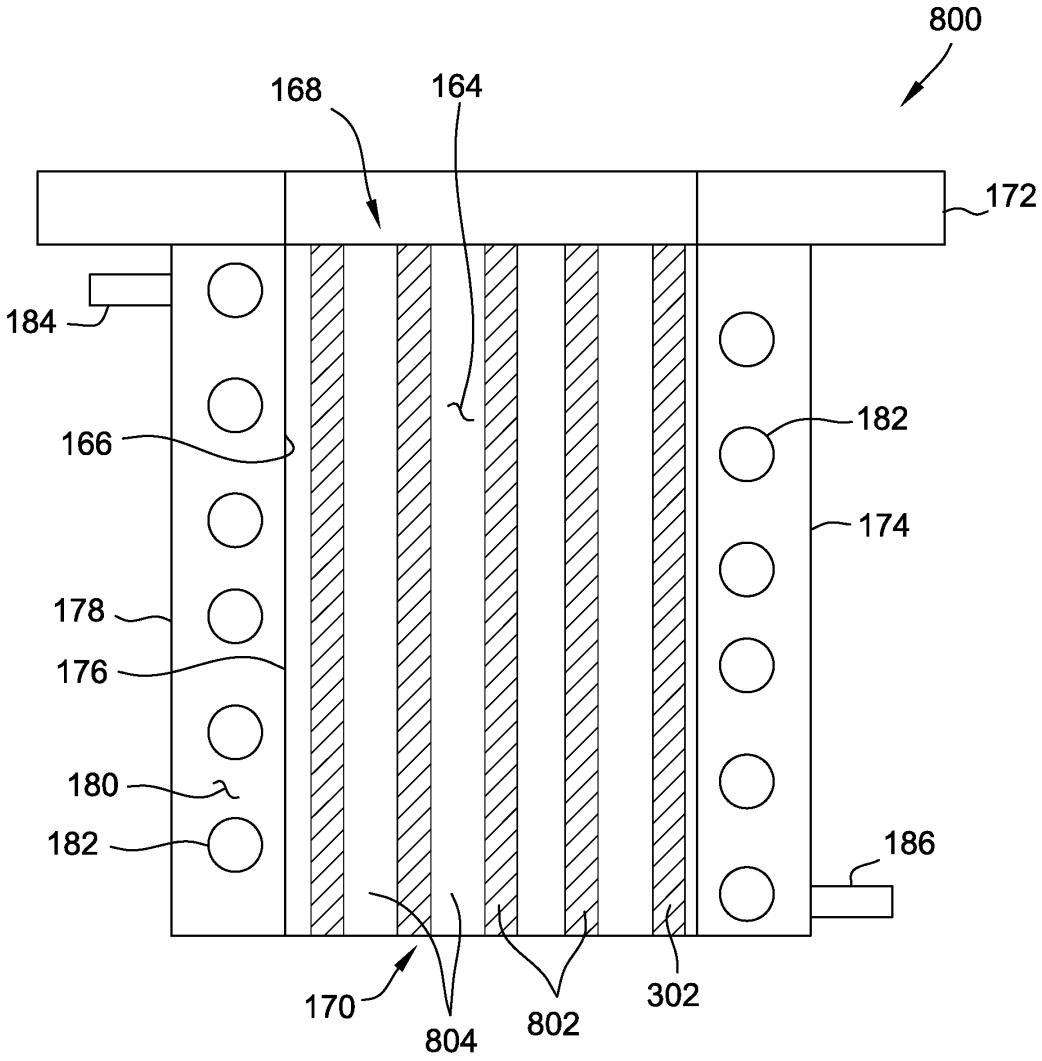
800
168
164
172
184
166
182
174
178
176
180
182
186
170
804
802
302

FIG. 8

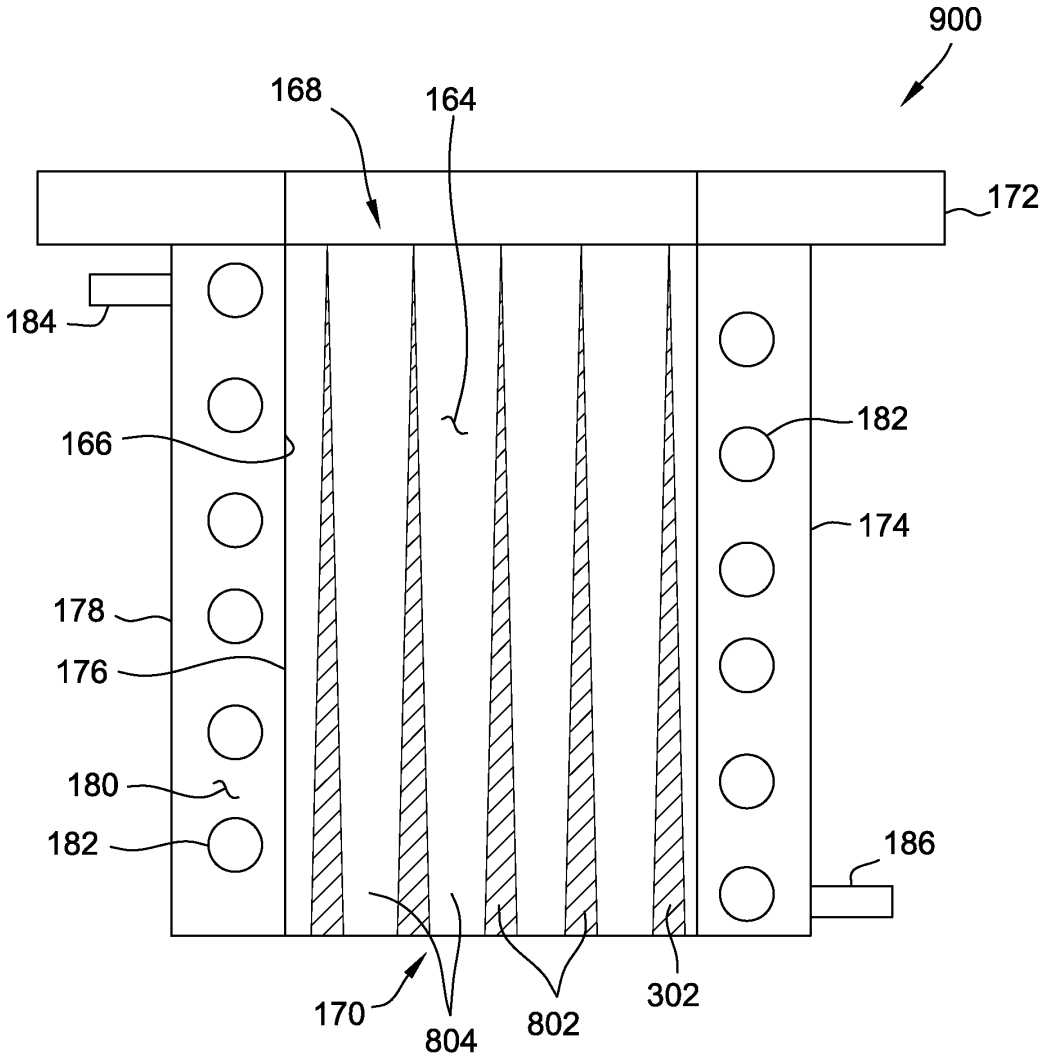
900
168
164
172
184
166
182
174
178
176
180
182
186
170
804
802
302

FIG. 9

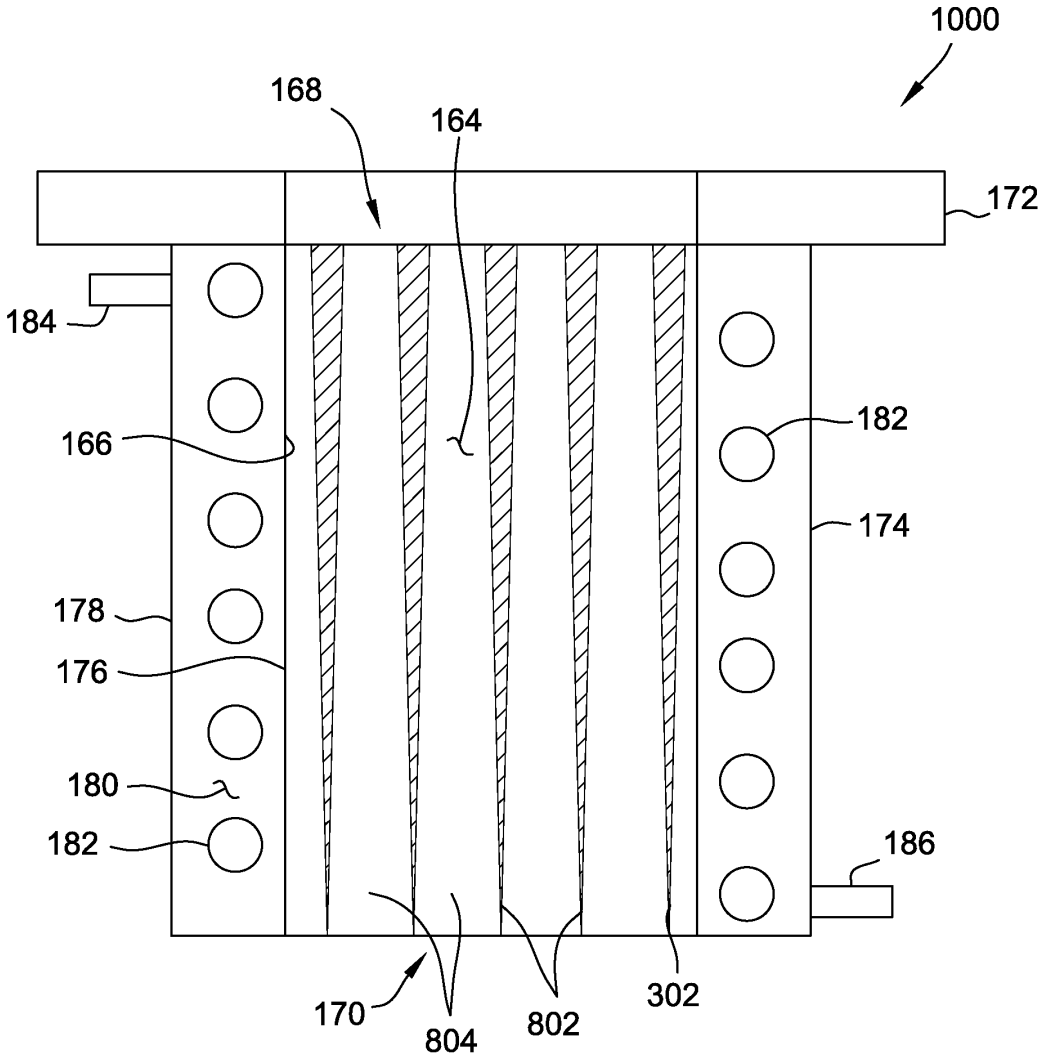
1000
168
164
172
184
166
182
174
178
176
180
182
186
170
804
802
302

FIG. 10

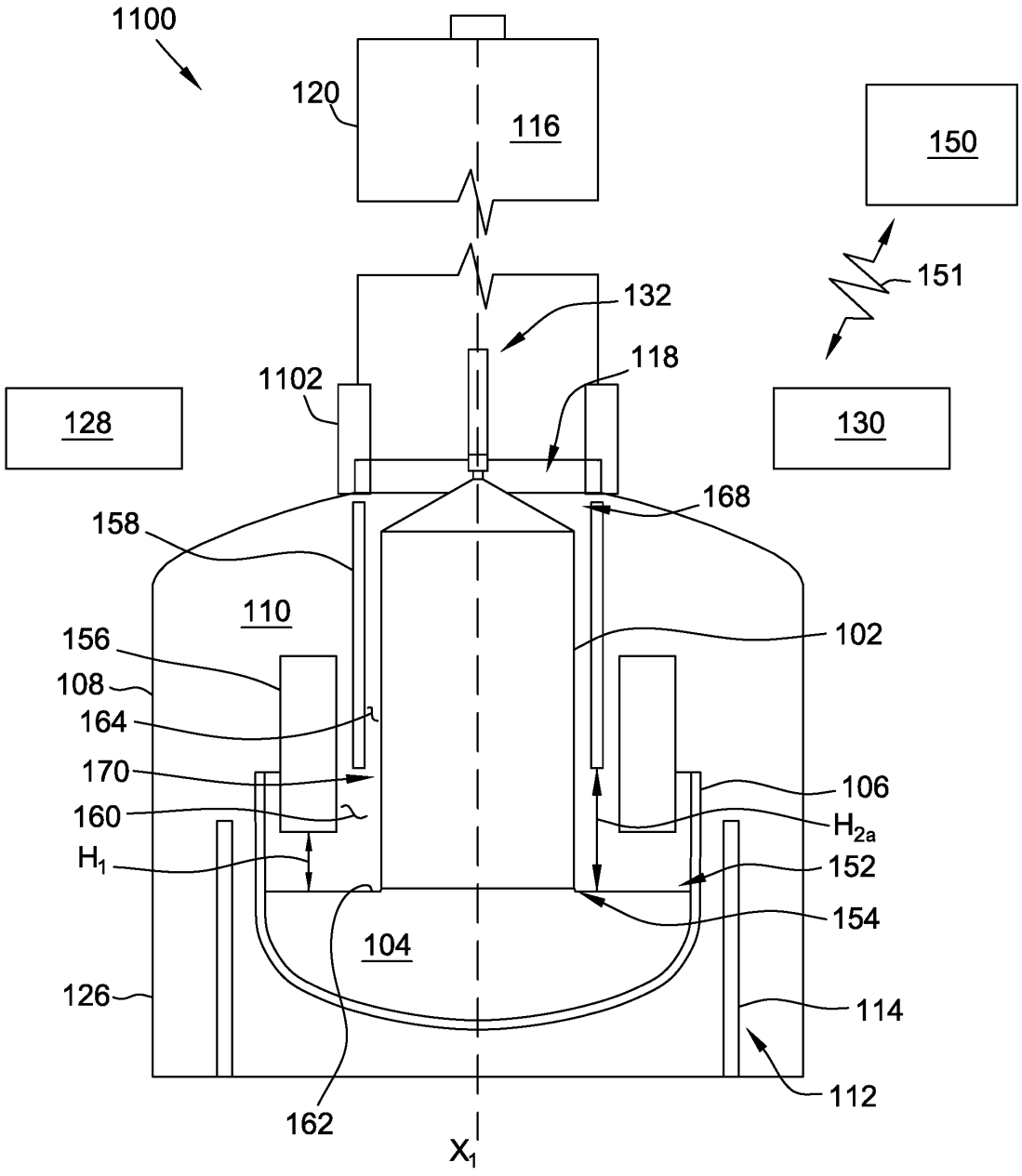
1100
120
116
150
151
132
118
1102
128
130
168
158
110
102
156
108
164
170
106
160
H_{2a}
H_1
152
154
104
126
114
112
162
X_1

FIG. 11

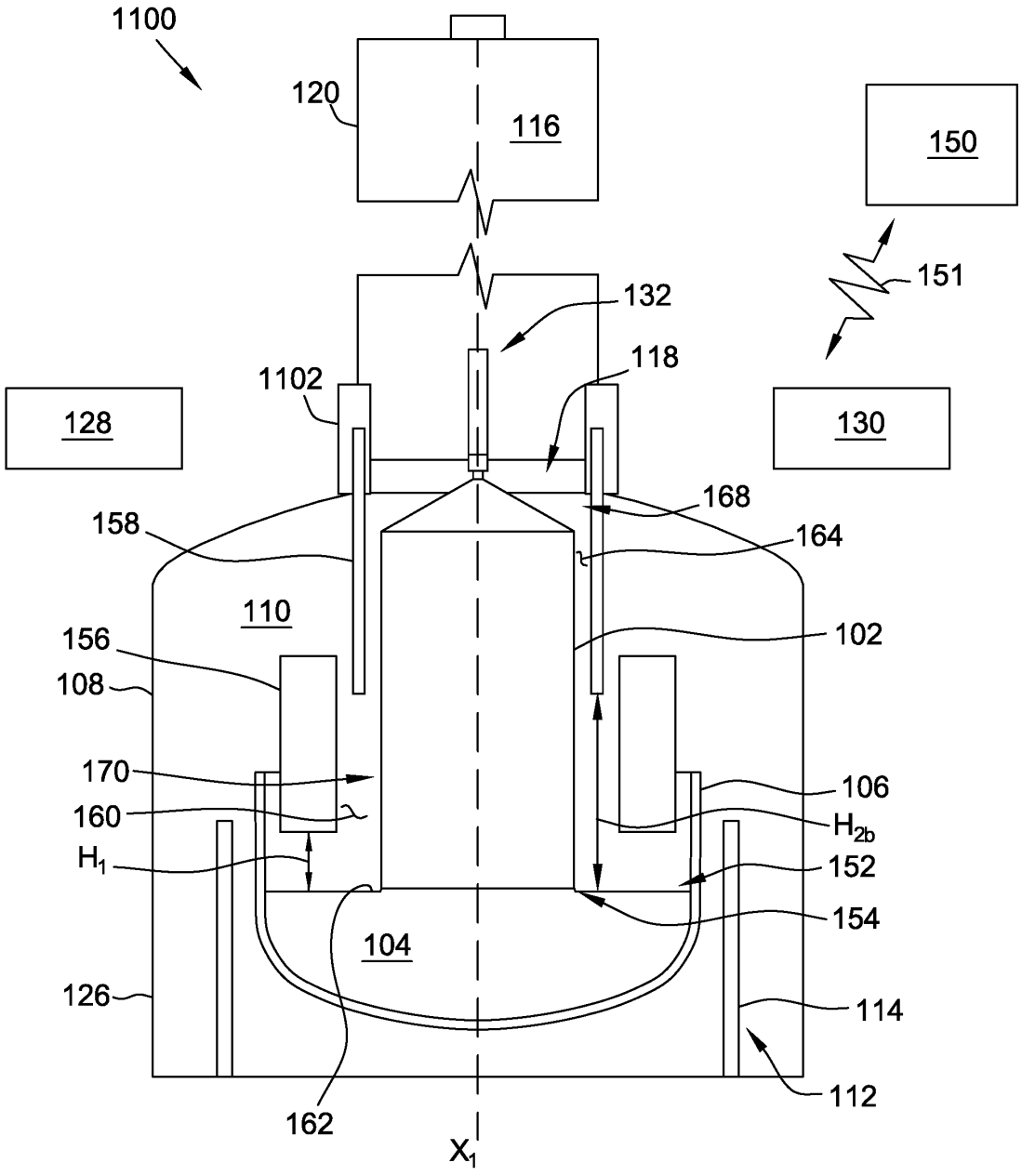
1100
120
116
150
151
132
118
1102
128
130
168
158
164
110
102
156
108
170
106
160
H_{2b}
H_1
152
154
104
126
114
112
162
X_1

FIG. 12

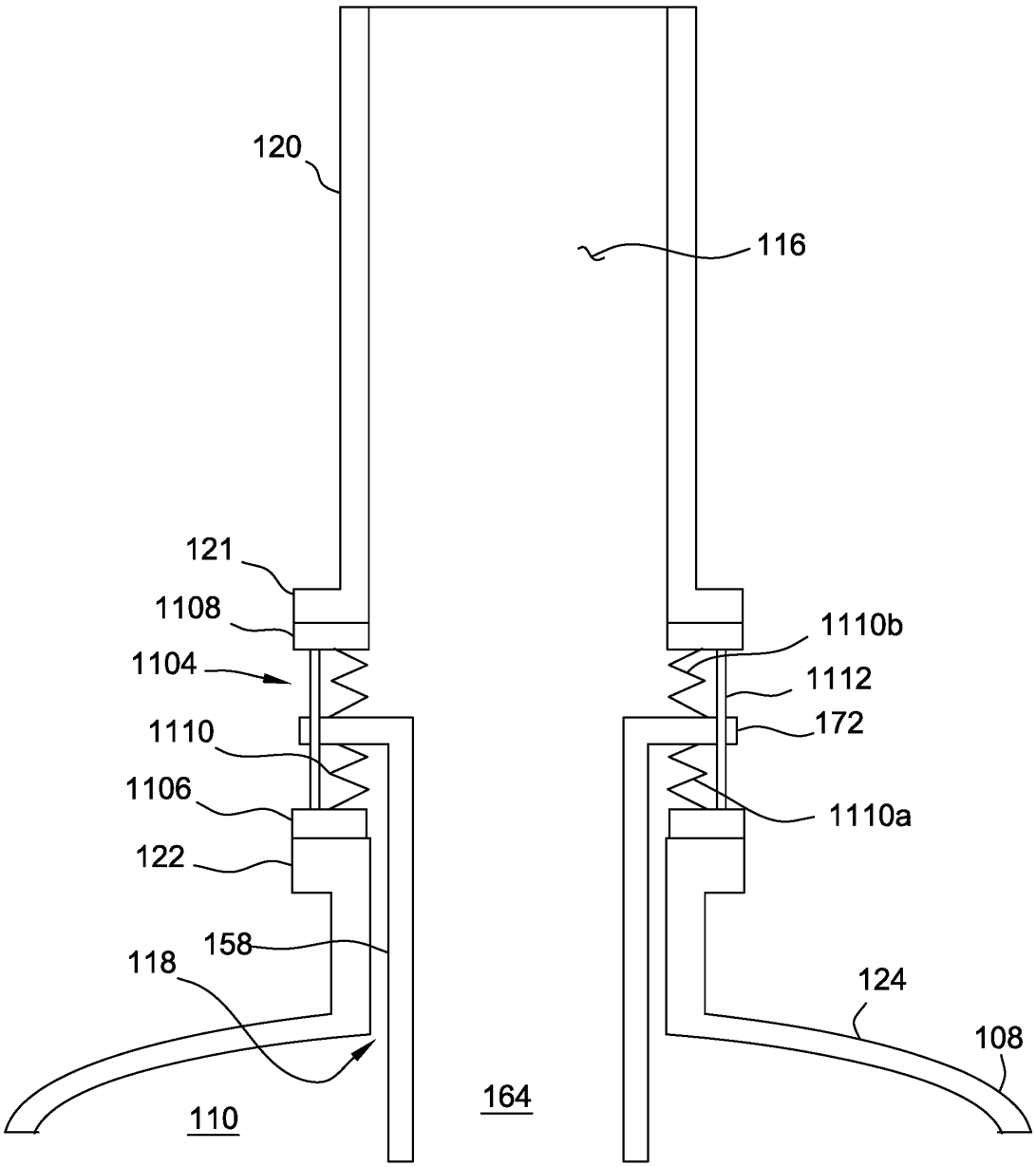
120
116
121
1108
1104
1110
1106
122
158
118
110
164
1110b
1112
172
1110a
124
108

FIG. 13

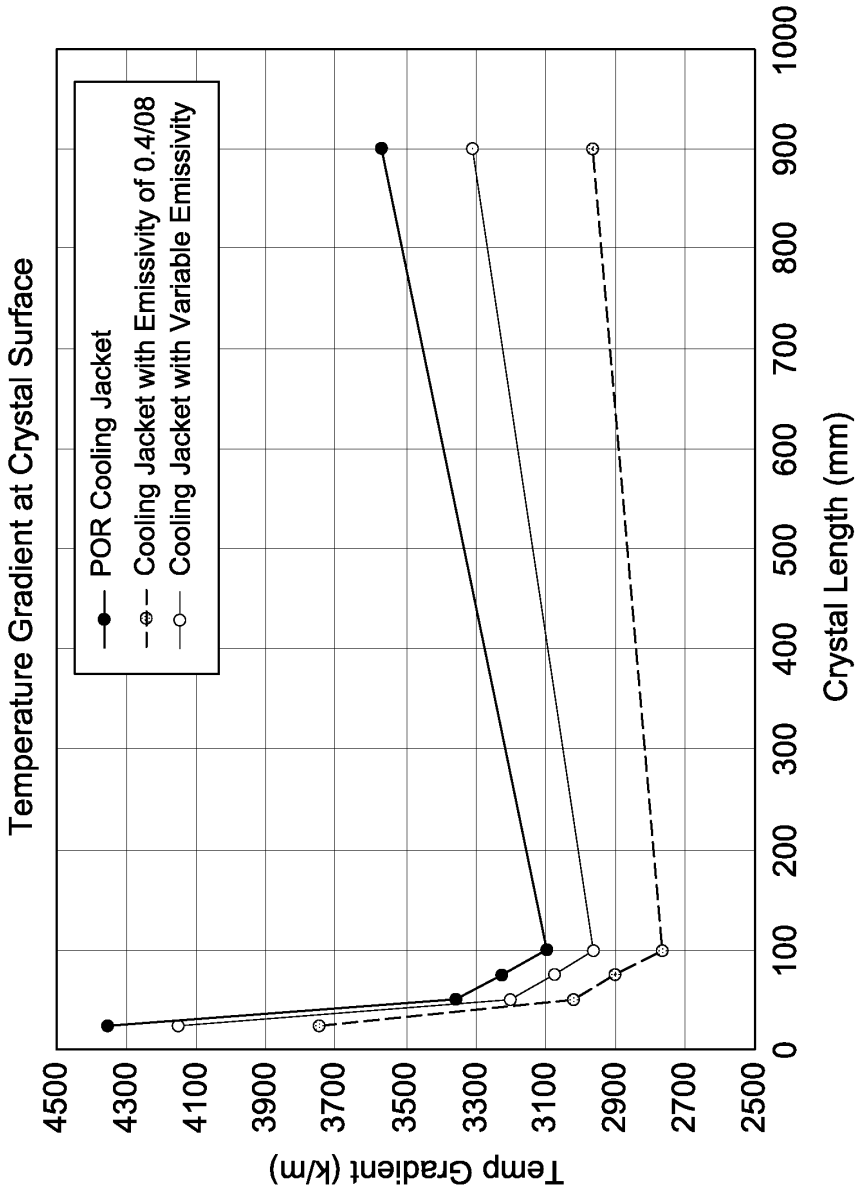
Temperature Gradient at Crystal Surface
POR Cooling Jacket
Cooling Jacket with Emissivity of 0.4/08
Cooling Jacket with Variable Emissivity
Temp Gradient (k/m)
4500
4300
4100
3900
3700
3500
3300
3100
2900
2700
2500
Crystal Length (mm)
0
100
200
300
400
500
600
700
800
900
1000

FIG. 14

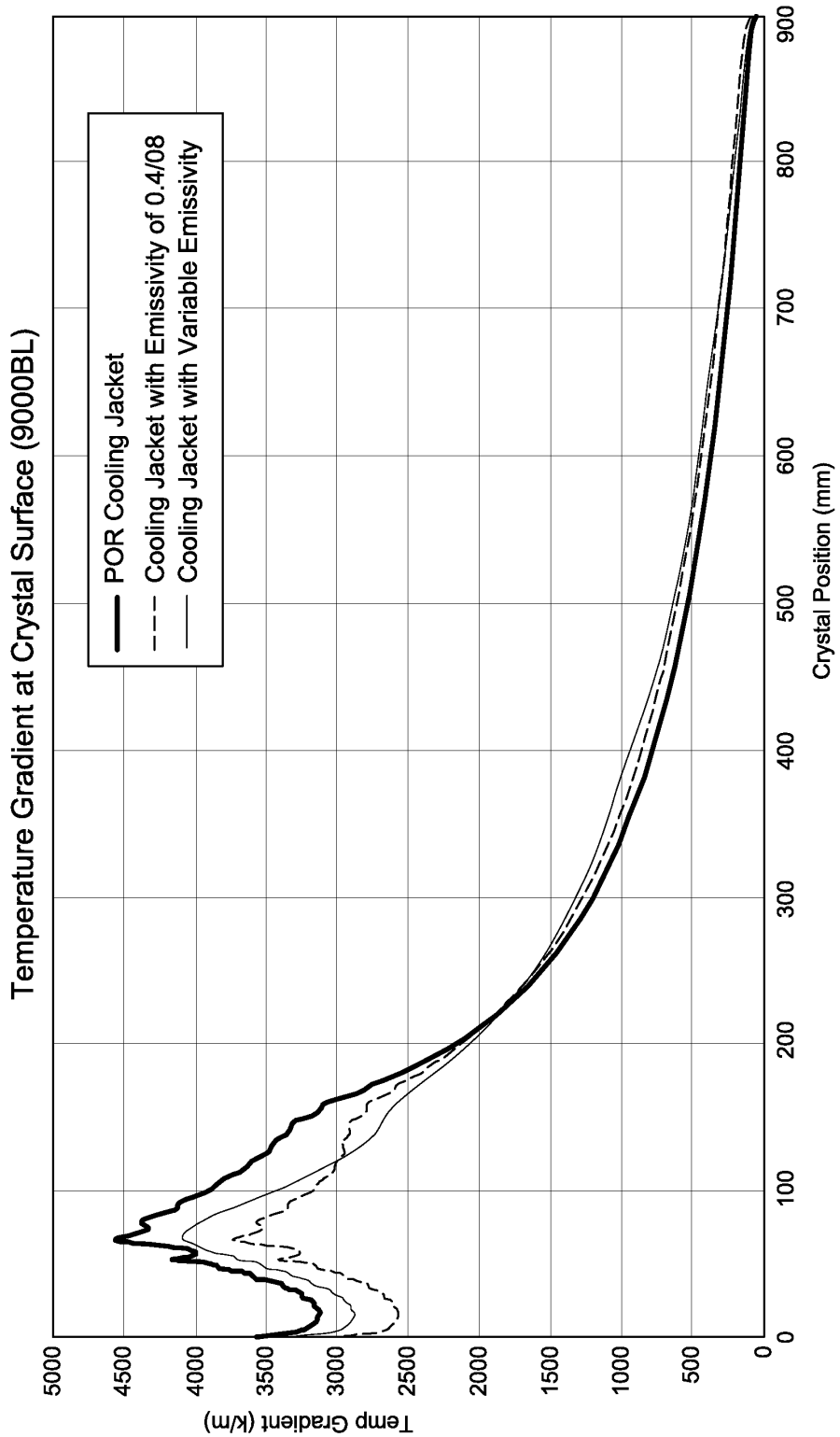
Temperature Gradient at Crystal Surface (9000BL)
POR Cooling Jacket
Cooling Jacket with Emissivity of 0.4/08
Cooling Jacket with Variable Emissivity
Temp Gradient (k/m)
Crystal Position (mm)
5000
4500
4000
3500
3000
2500
2000
1500
1000
500
0
0
100
200
300
400
500
600
700
800
900

FIG. 15

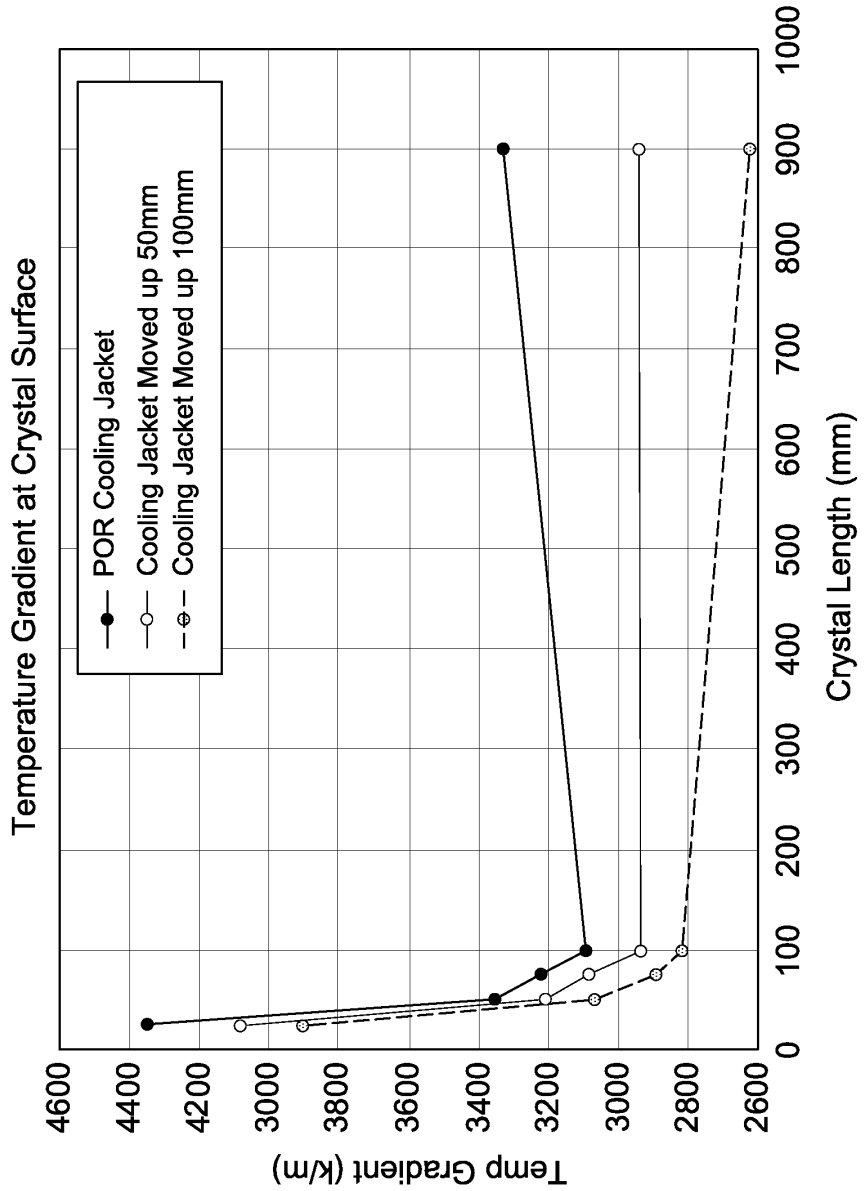
Temperature Gradient at Crystal Surface
POR Cooling Jacket
Cooling Jacket Moved up 50mm
Cooling Jacket Moved up 100mm
Temp Gradient (k/m)
4600
4400
4200
3000
3800
3600
3400
3200
3000
2800
2600
Crystal Length (mm)
0
100
200
300
400
500
600
700
800
900
1000

FIG. 16

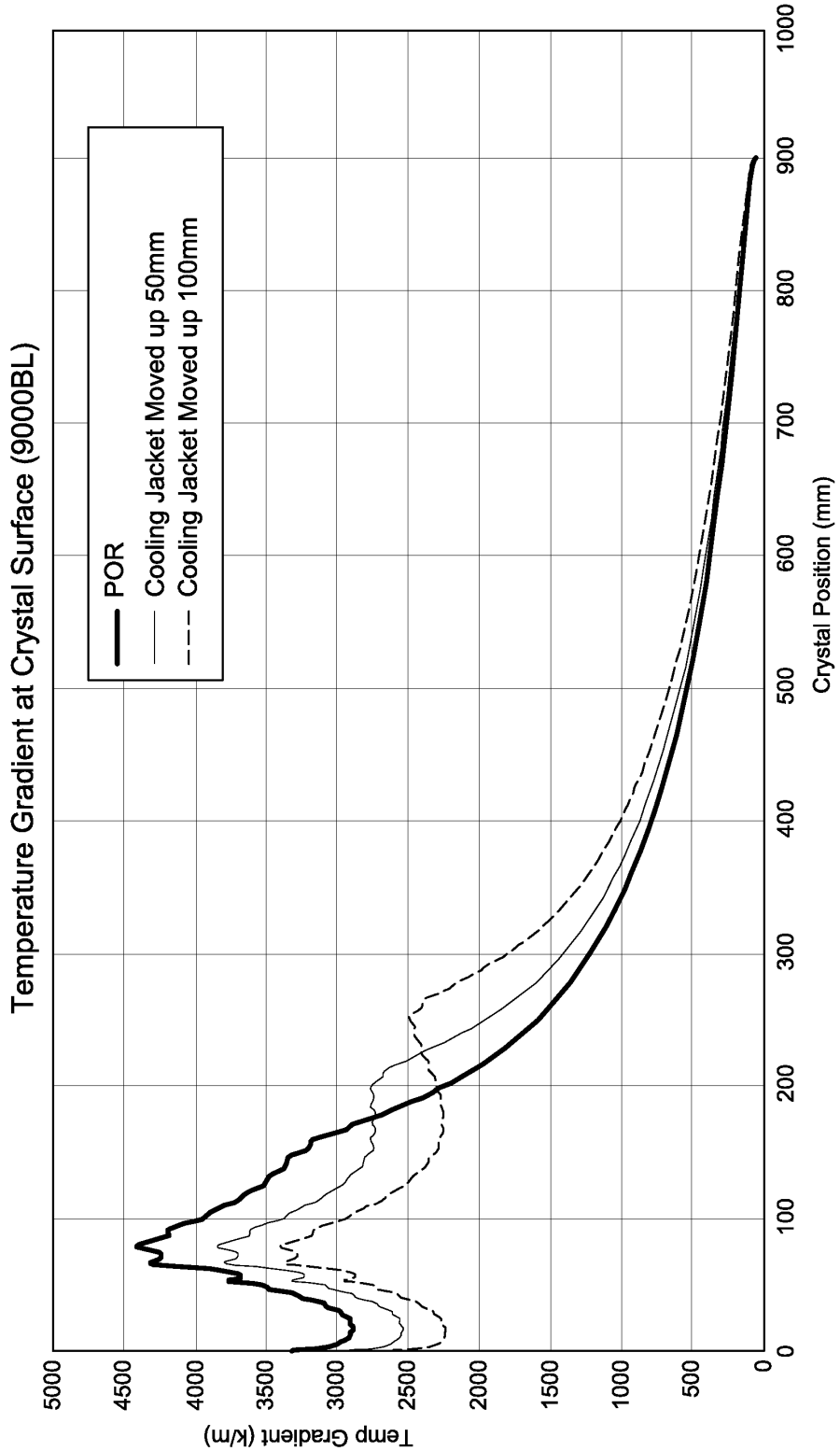
Temperature Gradient at Crystal Surface (9000BL)
POR
Cooling Jacket Moved up 50mm
Cooling Jacket Moved up 100mm
Temp Gradient (k/m)
Crystal Position (mm)
5000
4500
4000
3500
3000
2500
2000
1500
1000
500
0
0
100
200
300
400
500
600
700
800
900
1000

FIG. 17

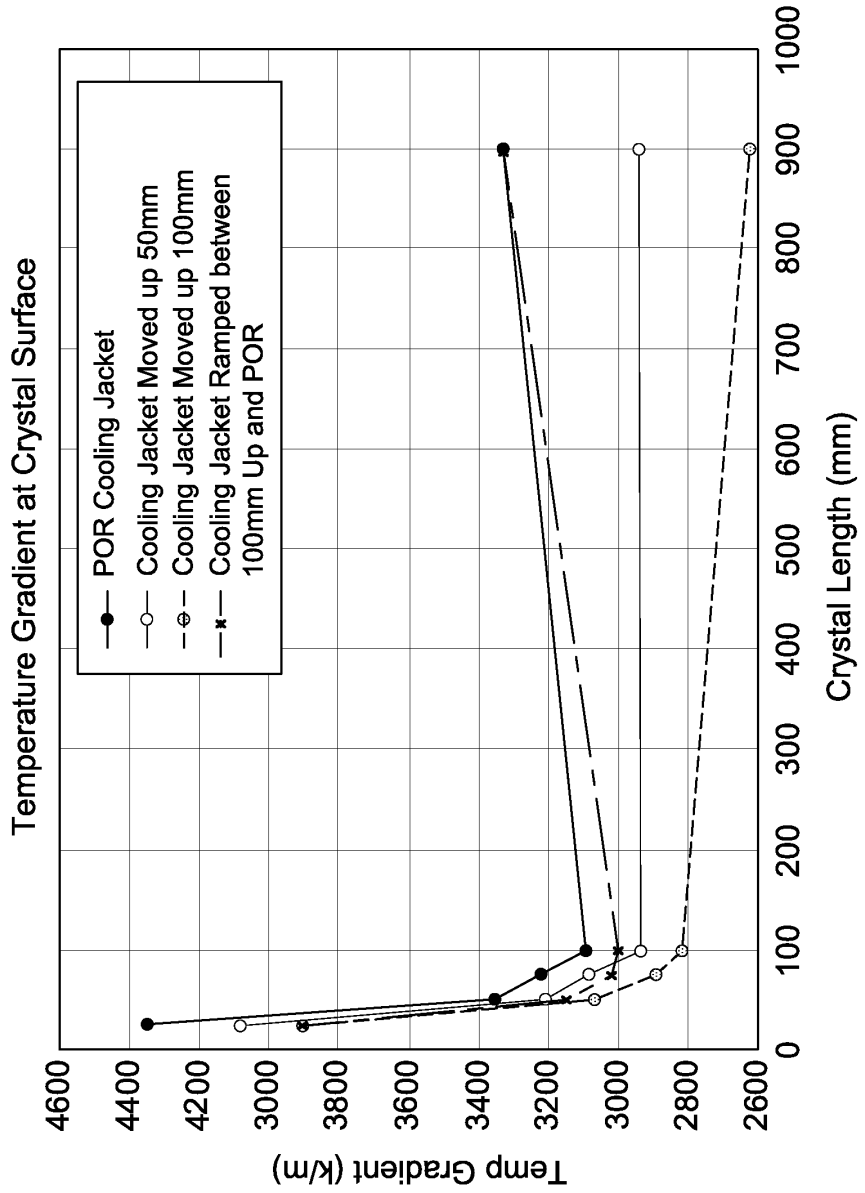
Temperature Gradient at Crystal Surface
POR Cooling Jacket
Cooling Jacket Moved up 50mm
Cooling Jacket Moved up 100mm
Cooling Jacket Ramped between 100mm Up and POR
Temp Gradient (k/m)
4600
4400
4200
3000
3800
3600
3400
3200
3000
2800
2600
0
100
200
300
400
500
600
700
800
900
1000
Crystal Length (mm)

FIG. 18