(12) INTERNATIONAL APPLICATION PUBLISHED UNDER THE PATENT COOPERATION TREATY (PCT)

(19) World Intellectual Property Organization
International Bureau

(43) International Publication Date
21 August 2025 (21.08.2025)

WIPO | PCT

(10) International Publication Number
WO 2025/172095 A1

(51) International Patent Classification:
B61L 25/02 (2006.01) *B61L 25/04* (2006.01)
B61L 27/40 (2022.01) *B61L 15/00* (2006.01)
B61L 3/12 (2006.01)

(21) International Application Number:
PCT/EP2025/052701

(22) International Filing Date:
03 February 2025 (03.02.2025)

(25) Filing Language: English

(26) Publication Language: English

(30) Priority Data:
24382141.0 13 February 2024 (13.02.2024) EP

(71) Applicant: **SIEMENS RAIL AUTOMATION S.A.U.** [ES/ES]; Ronda de Europa 5, E-28760 Tres Cantos (ES).

(72) Inventor: **GARCIA SERRANO GONZALEZ, Juan Manuel**; RONDA DE BUENAVISTA, 2, 45005 TOLEDO (ES).

(74) Agent: **SIEMENS PATENT ATTORNEYS**; Postfach 22 16 34, 80506 München (DE).

(81) Designated States *(unless otherwise indicated, for every kind of national protection available)*: AE, AG, AL, AM, AO, AT, AU, AZ, BA, BB, BG, BH, BN, BR, BW, BY, BZ, CA, CH, CL, CN, CO, CR, CU, CV, CZ, DE, DJ, DK, DM, DO, DZ, EC, EE, EG, ES, FI, GB, GD, GE, GH, GM, GT, HN, HR, HU, ID, IL, IN, IQ, IR, IS, IT, JM, JO, JP, KE, KG, KH, KN, KP, KR, KW, KZ, LA, LC, LK, LR, LS, LU, LY, MA, MD, MG, MK, MN, MU, MW, MX, MY, MZ, NA, NG, NI, NO, NZ, OM, PA, PE, PG, PH, PL, PT, QA, RO, RS, RU, RW, SA, SC, SD, SE, SG, SK, SL, ST, SV, SY, TH,

(54) Title: SYSTEM AND METHOD FOR DETERMINING A POSITION OF A GUIDED VEHICLE

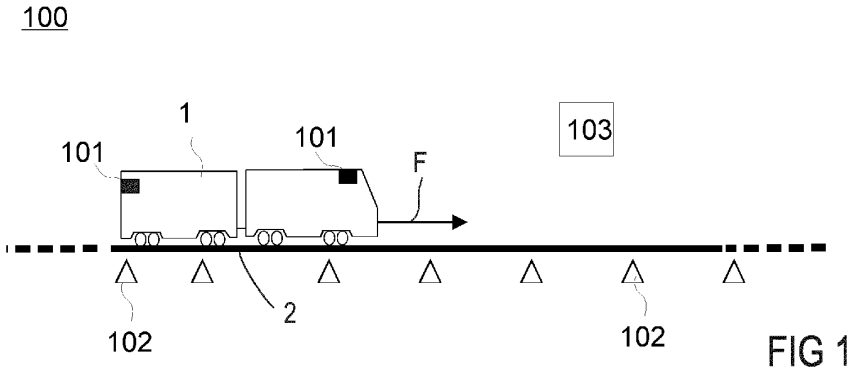

FIG 1

(57) Abstract: The present invention concerns a system (100) and a method for locating one or several guided vehicles (1) on a track (2) of a railway network, said system (100) comprising: - a control subsystem (103) configured for locating each of said one or several guided vehicles (1); - two types of BLE devices, namely BLET1 (101) and BLET2 (102), wherein BLET1 (101) is either a BLE gateway or a BLE beacon, wherein if BLET1 (101) is a BLE gateway, then BLET2 (102) is a BLE beacon, and if BLET1 (101) is a BLE beacon, then BLET2 (102) is a BLE gateway, wherein - at least one BLET1 (101) is configured for being installed at a predefined position on-board each guided vehicle (1); - each BLET2 (102) of a set of BLET2 (102) is configured for being installed each at a predefined position along said track (2); - upon reception of a signal broadcasted by a BLE beacon, each BLE gateway is configured for measuring an intensity of the received signal, and for transmitting in real time to the control subsystem(103) a set of data comprising the intensity value measured for said received signal, a time of measurement of said intensity value, a unique identifier of the BLE beacon that broadcasted said received signal, and its unique identifier; - the control subsystem (103) is configured for receiving each set of data, for associating to each set of data a single one of said one or several guided vehicles (1) by identifying the guided vehicle (1) to be associated from at least one unique identifier comprised in said received set of data, and for automatically determining a position of each identified guided vehicle (1) on the track (2) of the railway network; the system being characterized in that - for each identified guided vehicle, the control subsystem (103) is configured for determining said position from at least one set of data that has been received in connection with the identified guided vehicle,, wherein for each set of data, the measured intensity value comprised in the set of data, the predefined position of the BLET1 and of the BLET2 which are associated to the concerned set of data are used by the control subsystem (103) for determining said position of the guided vehicle.

WO 2025/172095 A1

[Continued on next page]

TJ, TM, TN, TR, TT, TZ, UA, UG, US, UY, UZ, VC, VN, WS, ZA, ZM, ZW.

(84) **Designated States** *(unless otherwise indicated, for every kind of regional protection available)*: ARIPO (BW, CV, GH, GM, KE, LR, LS, MW, MZ, NA, RW, SC, SD, SL, ST, SZ, TZ, UG, ZM, ZW), Eurasian (AM, AZ, BY, KG, KZ, RU, TJ, TM), European (AL, AT, BE, BG, CH, CY, CZ, DE, DK, EE, ES, FI, FR, GB, GR, HR, HU, IE, IS, IT, LT, LU, LV, MC, ME, MK, MT, NL, NO, PL, PT, RO, RS, SE, SI, SK, SM, TR), OAPI (BF, BJ, CF, CG, CI, CM, GA, GN, GQ, GW, KM, ML, MR, NE, SN, TD, TG).

Published:
— *with international search report (Art. 21(3))*