PCT WORLD INTELLECTUAL PROPERTY ORGANIZATION
International Bureau

INTERNATIONAL APPLICATION PUBLISHED UNDER THE PATENT COOPERATION TREATY (PCT)

(51) International Patent Classification 7 : G10L 19/00, 19/14

A1

(11) International Publication Number: **WO 00/16313**

(43) International Publication Date: 23 March 2000 (23.03.00)

(21) International Application Number: PCT/SE99/01582

(22) International Filing Date: 10 September 1999 (10.09.99)

(30) Priority Data:
09/154,361 16 September 1998 (16.09.98) US

(71) Applicant: TELEFONAKTIEBOLAGET LM ERICSSON (publ) [SE/SE]; S–126 25 Stockholm (SE).

(72) Inventors: JOHANSSON, Ingemar; Regnvägen 16, S–976 32 Luleå (SE). SVEDBERG, Jonas; Lingonstigen 73, S–973 33 Luleå (SE). UVLIDEN, Anders; Forskarvägen 27, S–977 53 Luleå (SE).

(74) Agent: ERICSSON RADIO SYSTEMS AB; Patent Support/Ericsson Research, S–164 80 Stockholm (SE).

(81) Designated States: AE, AL, AM, AT, AU, AZ, BA, BB, BG, BR, BY, CA, CH, CN, CR, CU, CZ, DE, DK, DM, EE, ES, FI, GB, GD, GE, GH, GM, HR, HU, ID, IL, IN, IS, JP, KE, KG, KP, KR, KZ, LC, LK, LR, LS, LT, LU, LV, MD, MG, MK, MN, MW, MX, NO, NZ, PL, PT, RO, RU, SD, SE, SG, SI, SK, SL, TJ, TM, TR, TT, UA, UG, UZ, VN, YU, ZA, ZW, ARIPO patent (GH, GM, KE, LS, MW, SD, SL, SZ, UG, ZW), Eurasian patent (AM, AZ, BY, KG, KZ, MD, RU, TJ, TM), European patent (AT, BE, CH, CY, DE, DK, ES, FI, FR, GB, GR, IE, IT, LU, MC, NL, PT, SE), OAPI patent (BF, BJ, CF, CG, CI, CM, GA, GN, GW, ML, MR, NE, SN, TD, TG).

Published
With international search report.
Before the expiration of the time limit for amending the claims and to be republished in the event of the receipt of amendments.

(54) Title: SPEECH CODING WITH BACKGROUND NOISE REPRODUCTION

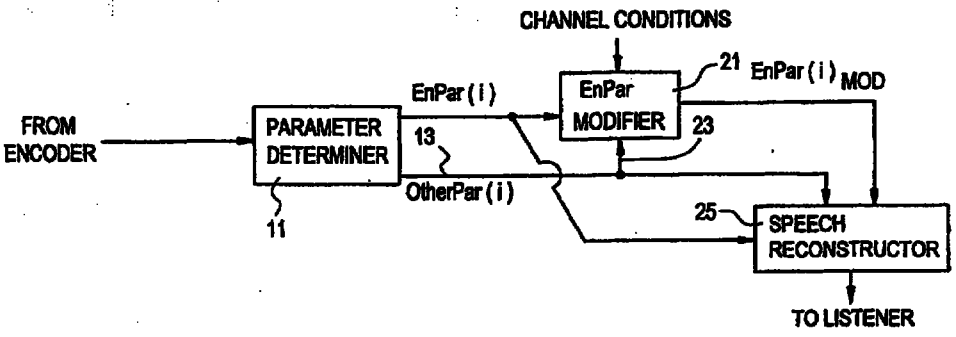

(57) Abstract

In producing an approximation of an original speech signal from encoded information about the original speech signal, current parameters (EnPar(i)) associated with a current segment of the original speech signal are determined from the encoded information. Reproduction of a noise component of the original speech signal is improved by using at least one of the current parameters and corresponding previous parameters respectively associated with previous segments of the original speech signal (31, 37, 39) to produce a modified parameter ($EnPar(i)_{mod}$). The modified parameter is then used (25, 40) to produce an approximation of the current segment of the original speech signal.