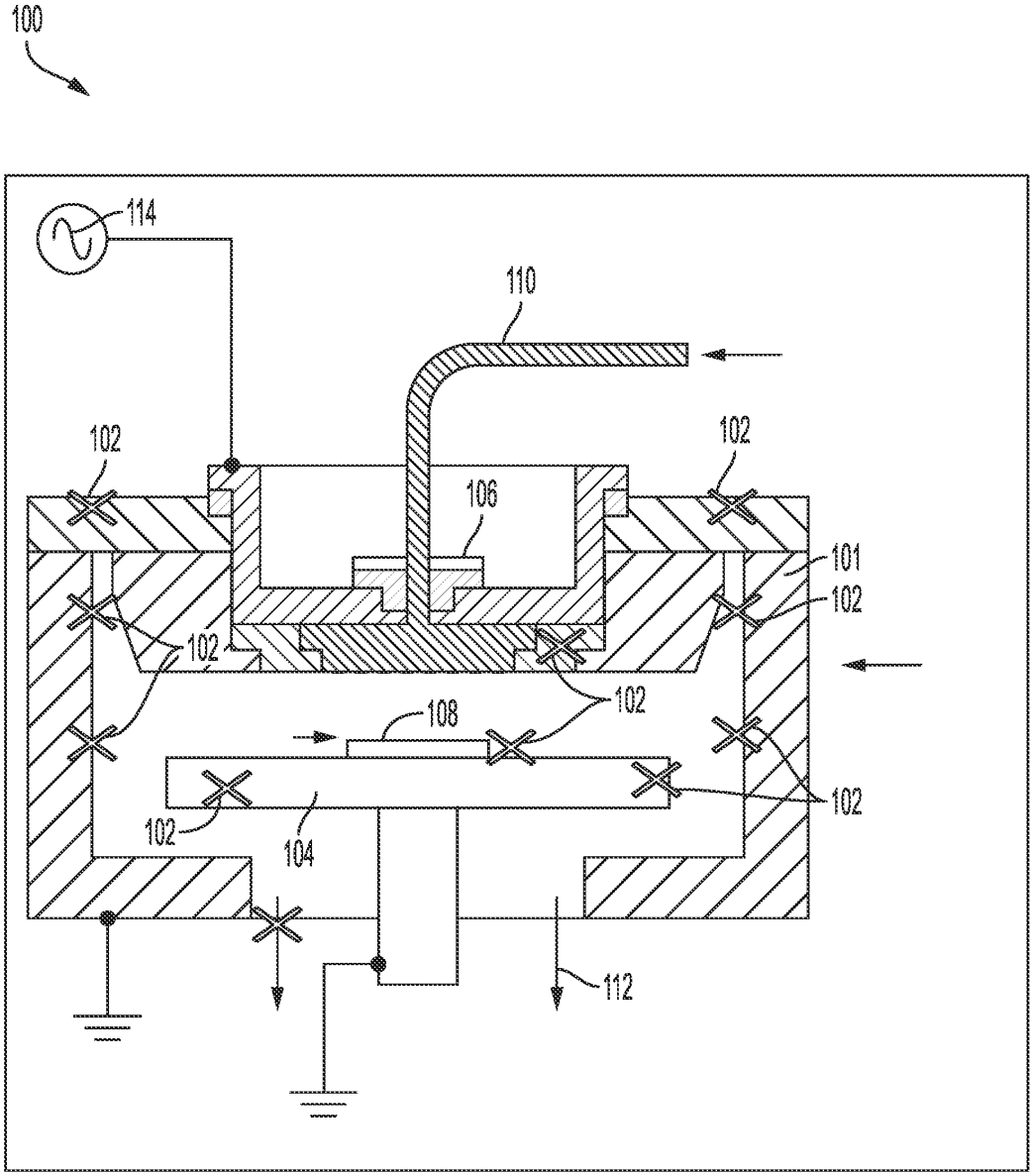

FIG. 1A

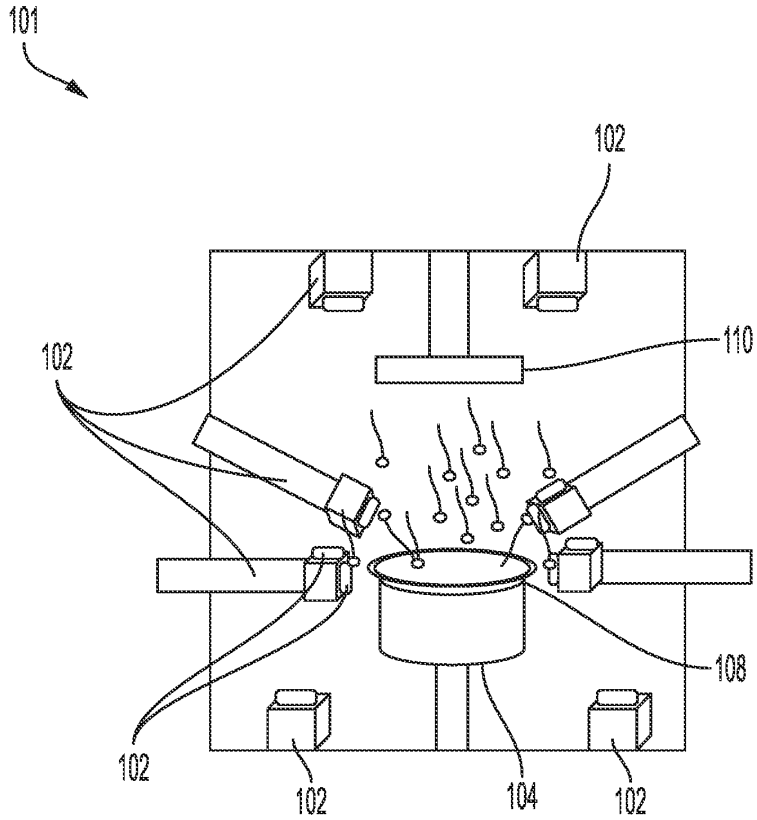

FIG. 1B

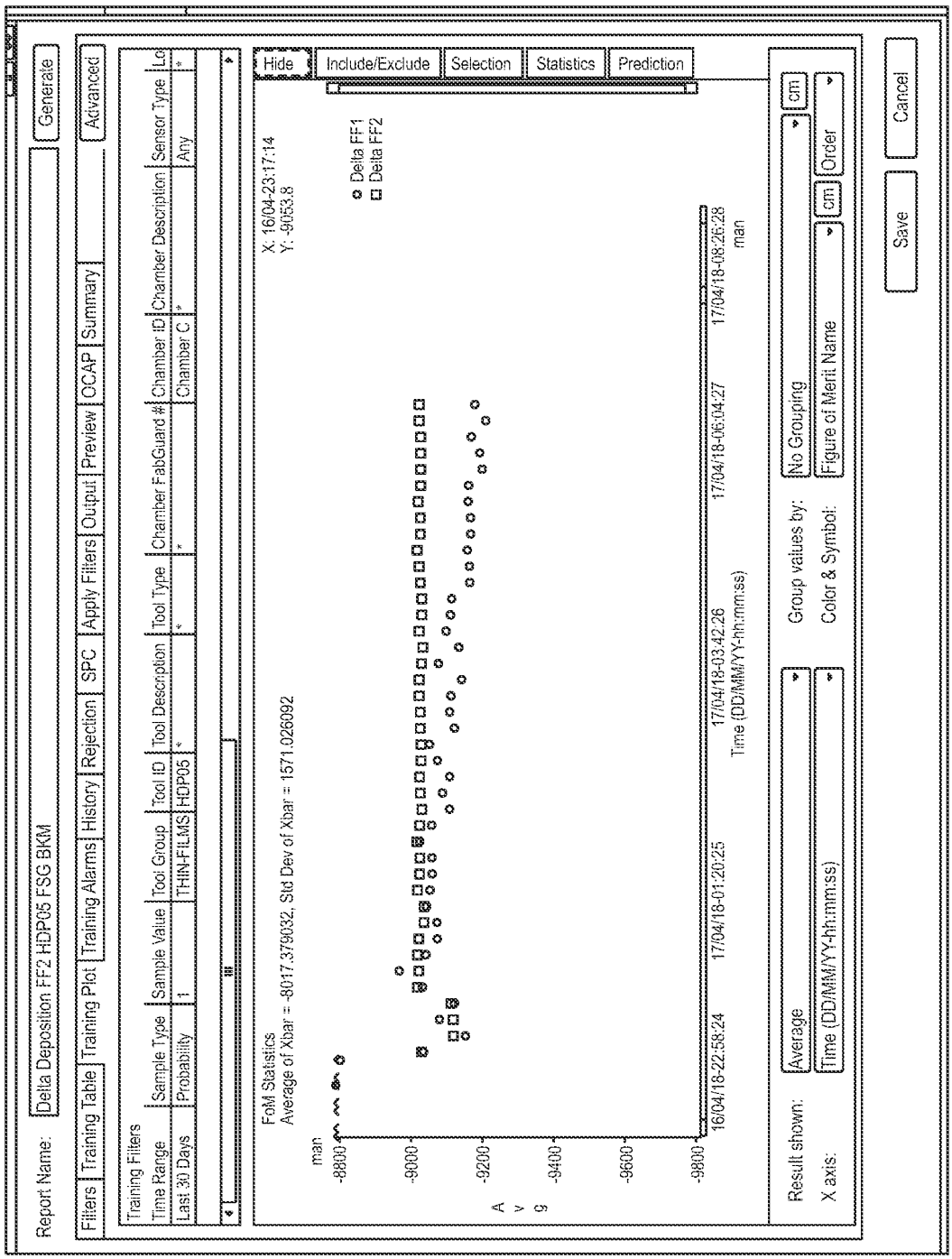
200
Report Name:
Delta Deposition FF2 HDP05 FSG BKM
Generate
Advanced
Filters
Training Table
Training Plot
Training Alarms
History
Rejection
SPC
Apply Filters
Output
Preview
OCAP
Summary
Training Filters
Time Range
Sample Type
Sample Value
Tool Group
Tool ID
Tool Description
Tool Type
Chamber FabGuard #
Chamber ID
Chamber Description
Sensor Type
Last 30 Days
Probability
1
THIN-FILMS
HDP05
Chamber C
Any
Hide
Include/Exclude
Selection
Statistics
Prediction
FoM Statistics
Average of Xbar = -8017.379032, Std Dev of Xbar = 1571.026092
X: 16/04-23:17:14
Y: -9053.8
Delta FF1
Delta FF2
man
-8800
-9000
-9200
-9400
-9600
-9800
Avg
16/04/18-22:58:24
17/04/18-01:20:25
17/04/18-03:42:26
17/04/18-06:04:27
17/04/18-08:26:28
Time (DD/MM/YY-hh:mm:ss)
man
Result shown:
Average
Group values by:
No Grouping
cm
X axis:
Time (DD/MM/YY-hh:mm:ss)
Color & Symbol:
Figure of Merit Name
cm
Order
Save
Cancel

FIG. 2

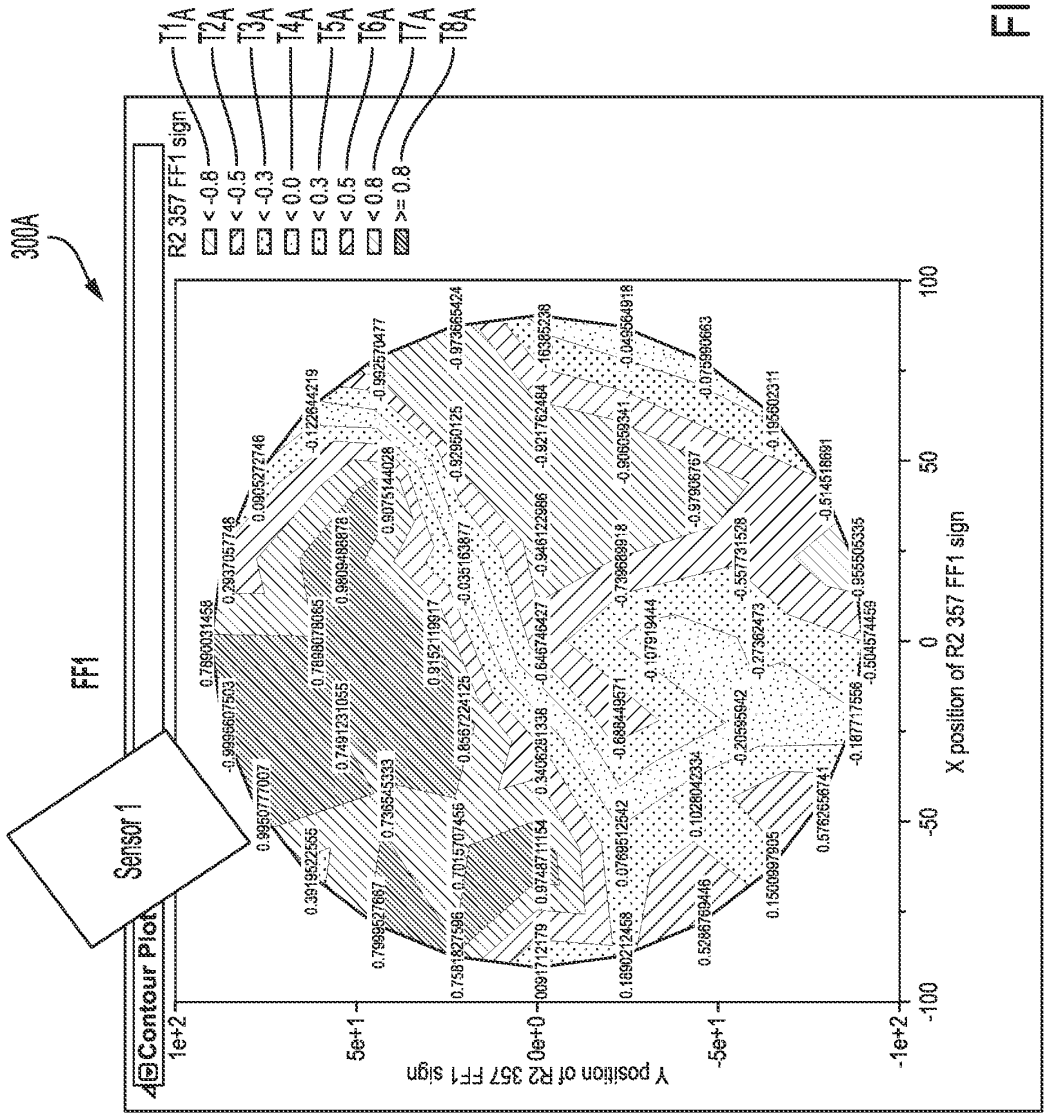
300A
FF1
Sensor 1
Contour Plot
R2 357 FF1 sign
< -0.8
< -0.5
< -0.3
< 0.0
< 0.3
< 0.5
< 0.8
>= 0.8
T1A
T2A
T3A
T4A
T5A
T6A
T7A
T8A
X position of R2 357 FF1 sign
Y position of R2 357 FF1 sign
1e+2
5e+1
0e+0
-5e+1
-1e+2
100
50
0
-50
-100

FIG. 3A

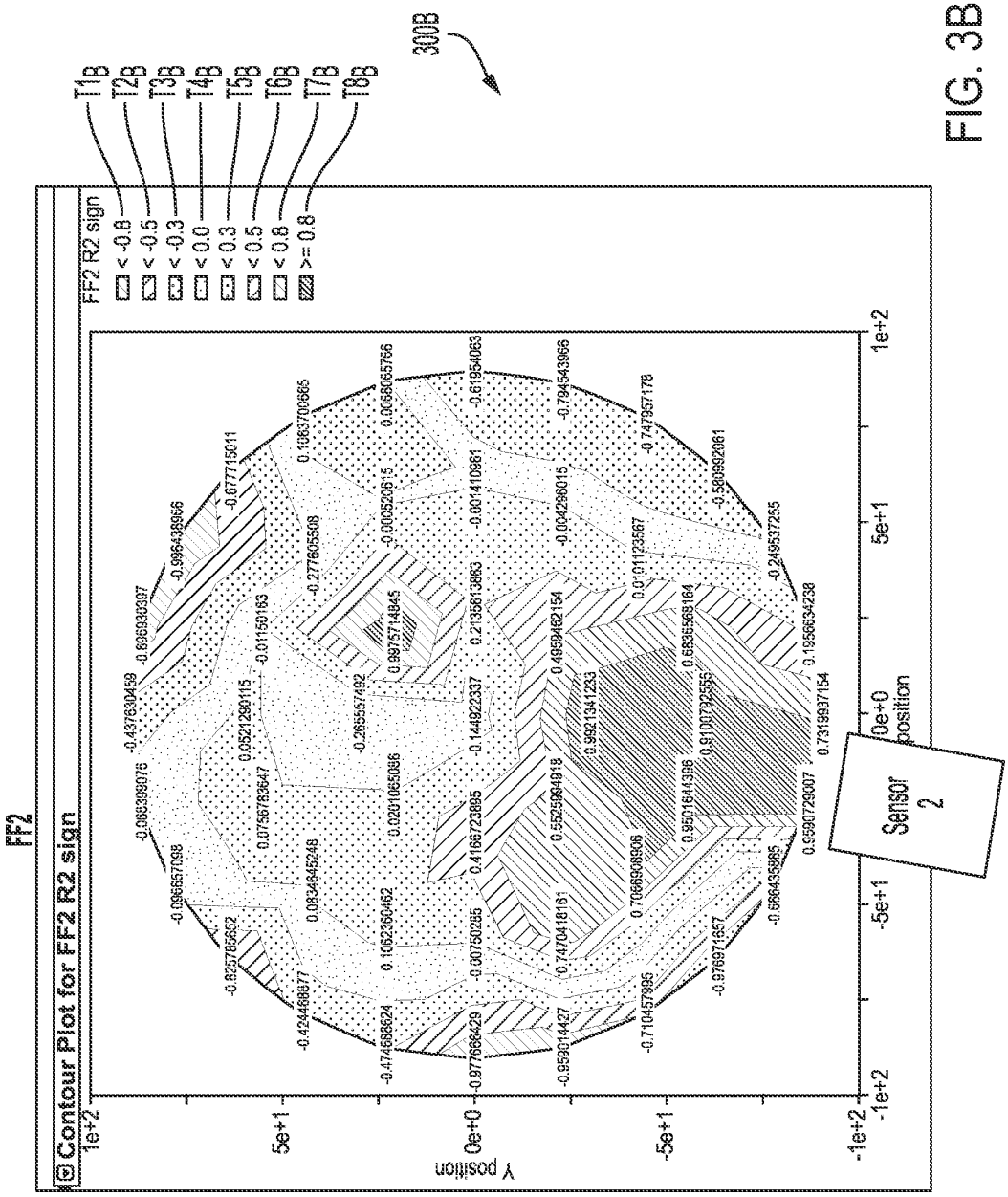
FF2
Contour Plot for FF2 R2 sign
FF2 R2 sign
< -0.8
< -0.5
< -0.3
< 0.0
< 0.3
< 0.5
< 0.8
>= 0.8
T1B
T2B
T3B
T4B
T5B
T6B
T7B
T8B
300B
Y position
X position
1e+2
5e+1
0e+0
-5e+1
-1e+2
Sensor 2

FIG. 3B