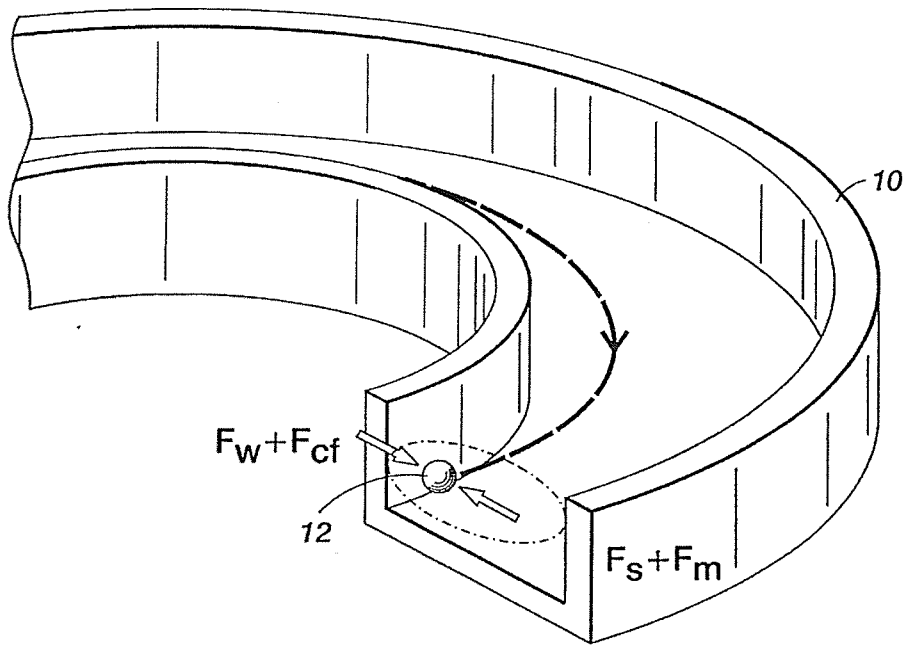

FIG. 1

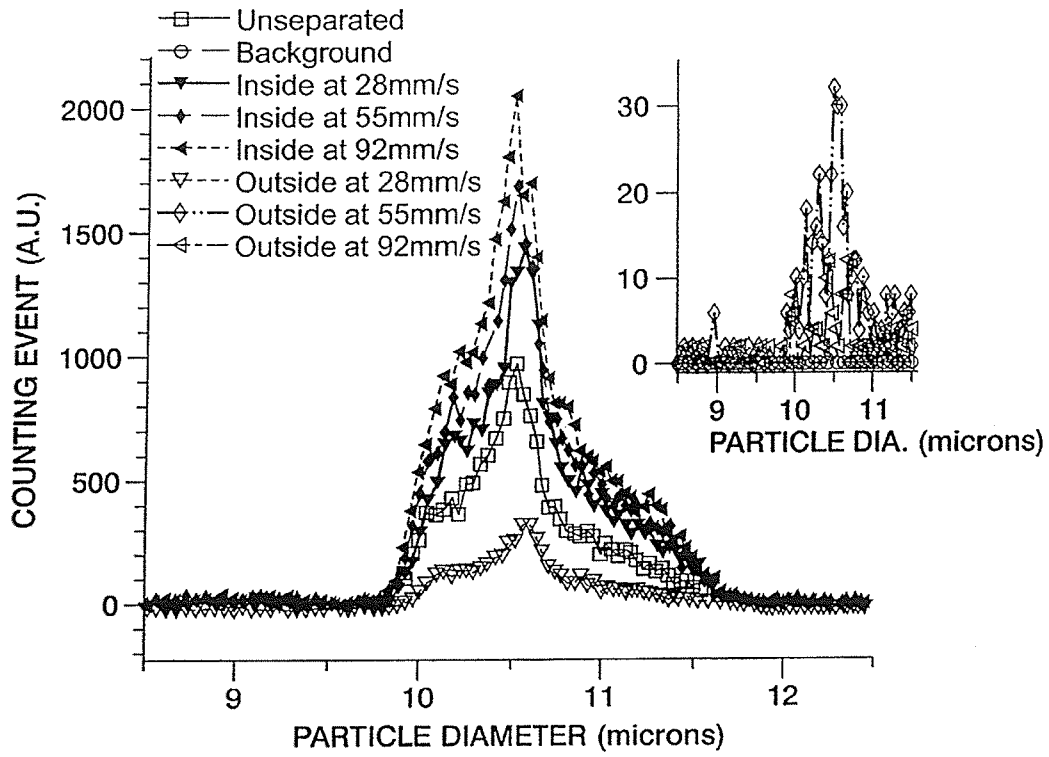
Unseparated
Background
Inside at 28mm/s
Inside at 55mm/s
Inside at 92mm/s
Outside at 28mm/s
Outside at 55mm/s
Outside at 92mm/s
COUNTING EVENT (A.U.)
2000
1500
1000
500
0
9
10
11
12
PARTICLE DIAMETER (microns)
30
20
10
0
9
10
11
PARTICLE DIA. (microns)

FIG. 2(a)

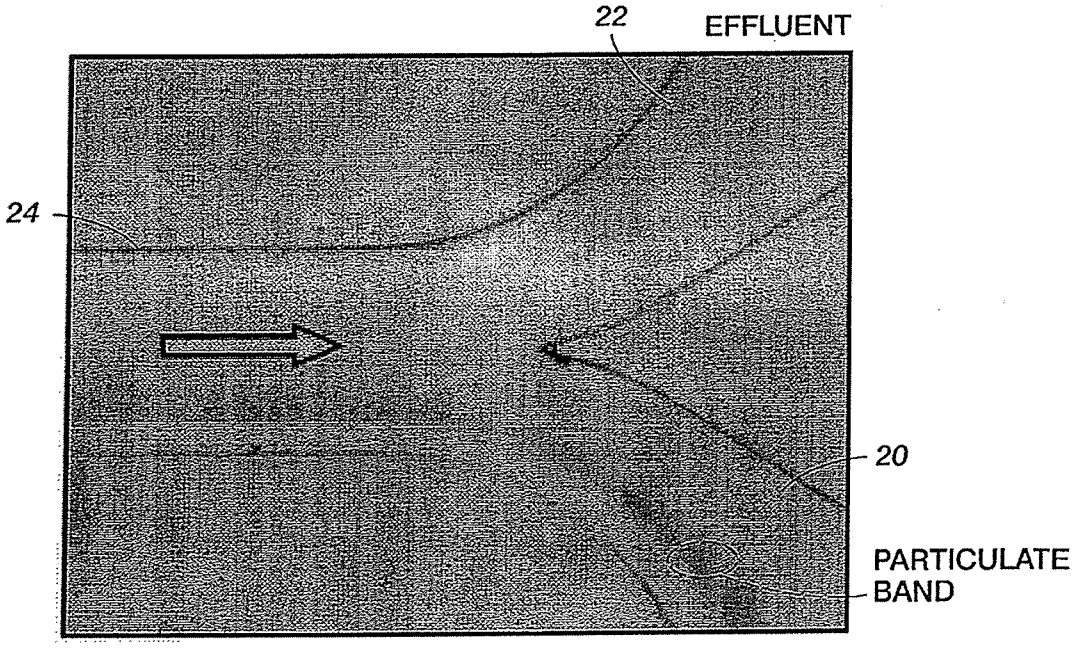
22
EFFLUENT
24
20
PARTICULATE
BAND

FIG. 2(b)

FIG. 3(a)

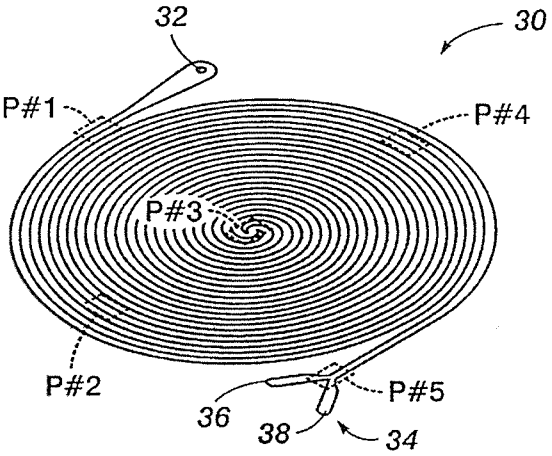

FIG. 3(b)

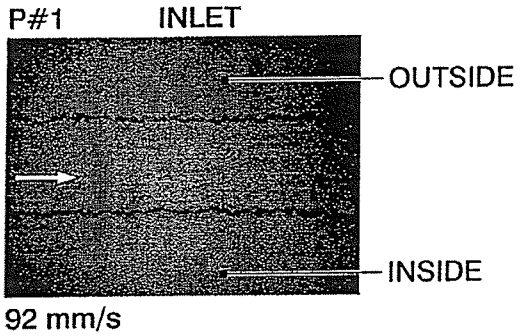

FIG. 3(c)

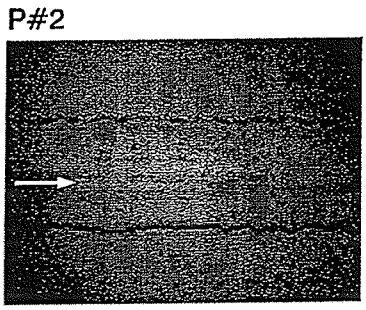

FIG. 3(d)

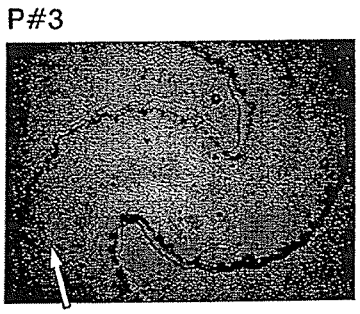

FIG. 3(e)

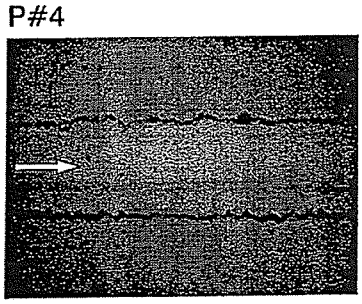

FIG. 3(f)

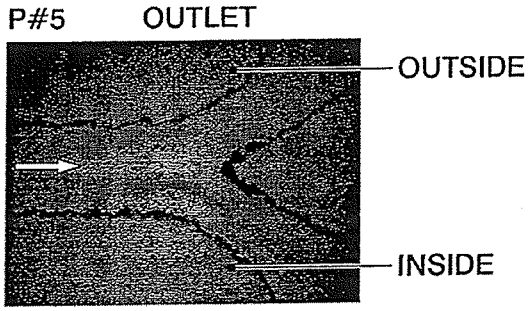

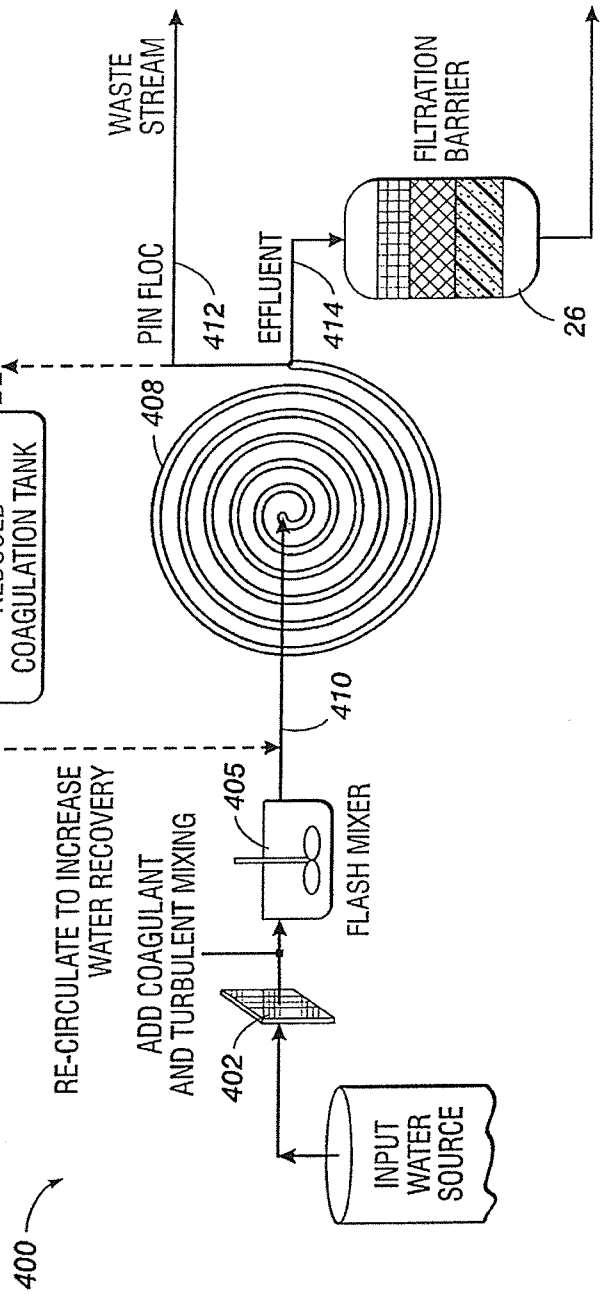
400
INPUT WATER SOURCE
402
ADD COAGULANT AND TURBULENT MIXING
405
FLASH MIXER
410
RE-CIRCULATE TO INCREASE WATER RECOVERY
416
404
REDUCED COAGULATION TANK
408
PIN FLOC
412
WASTE STREAM
EFFLUENT
414
FILTRATION BARRIER
26

FIG. 4

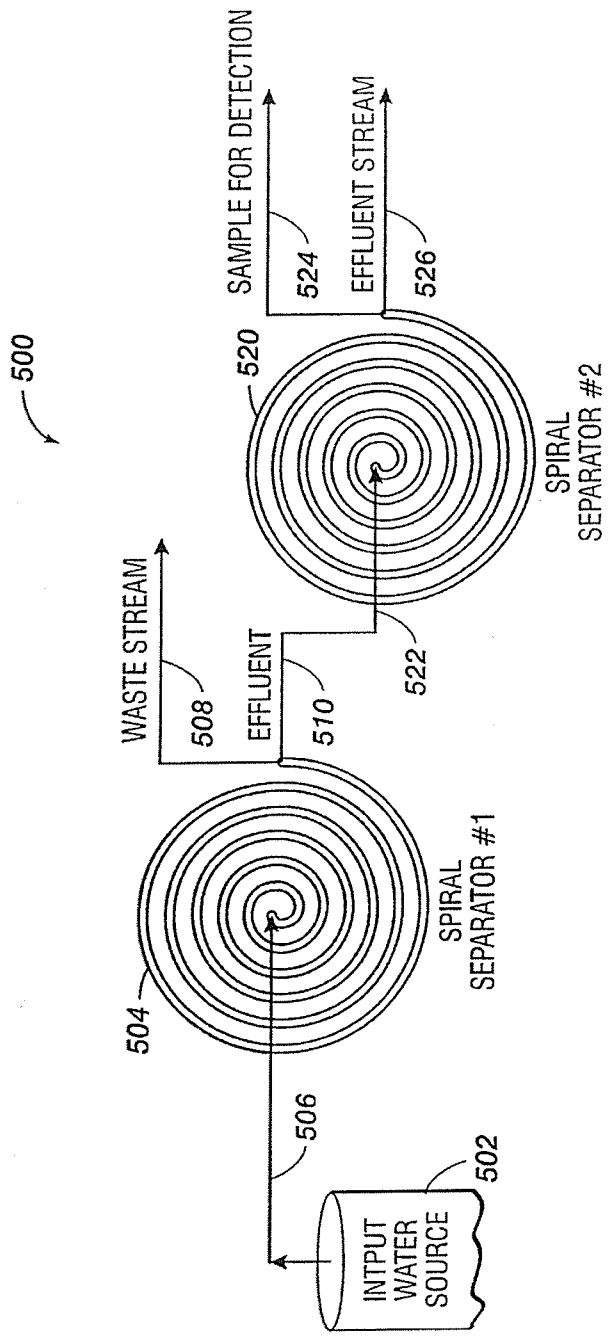
500
INTPUT WATER SOURCE
502
506
SPIRAL SEPARATOR #1
504
WASTE STREAM
508
EFFLUENT
510
522
SPIRAL SEPARATOR #2
520
SAMPLE FOR DETECTION
524
EFFLUENT STREAM
526

FIG. 5

FIG. 6(a)

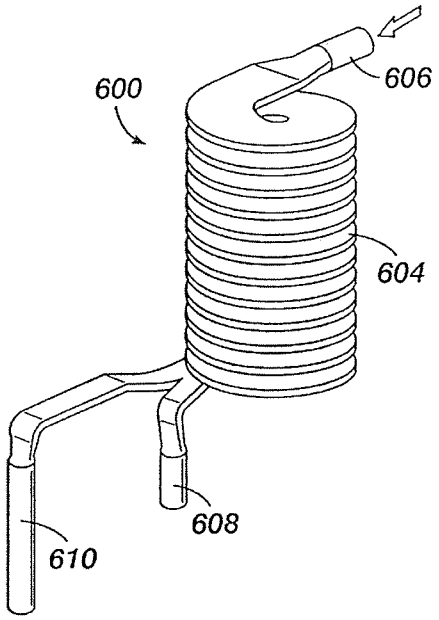

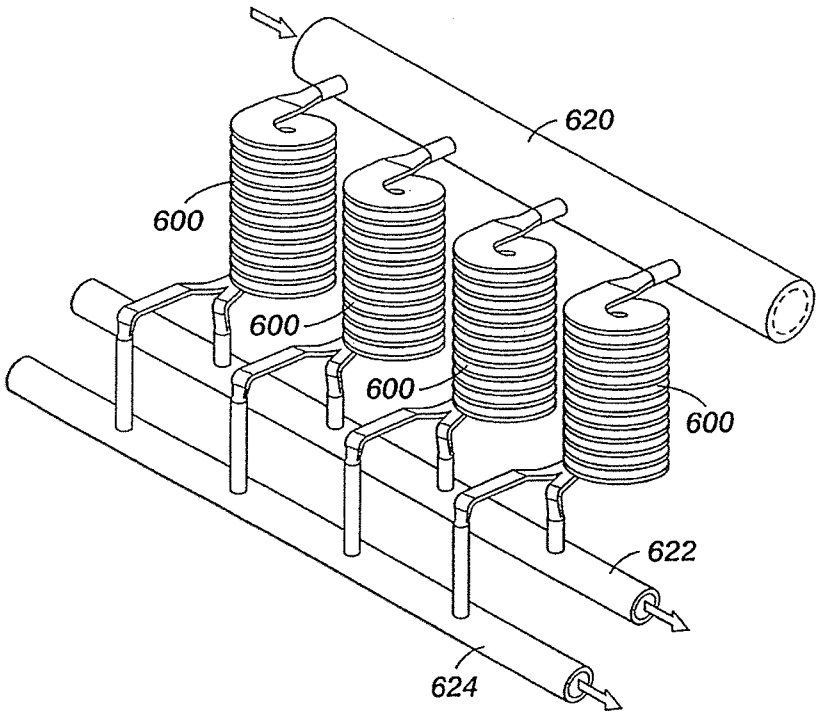

FIG. 6(b)

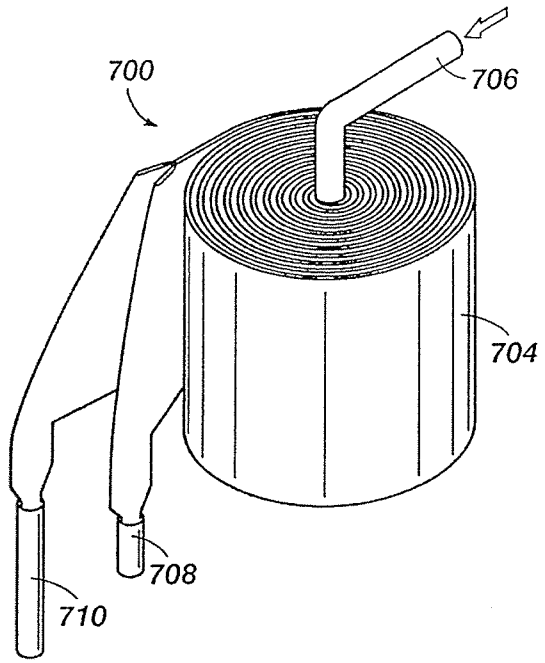

FIG. 7(a)

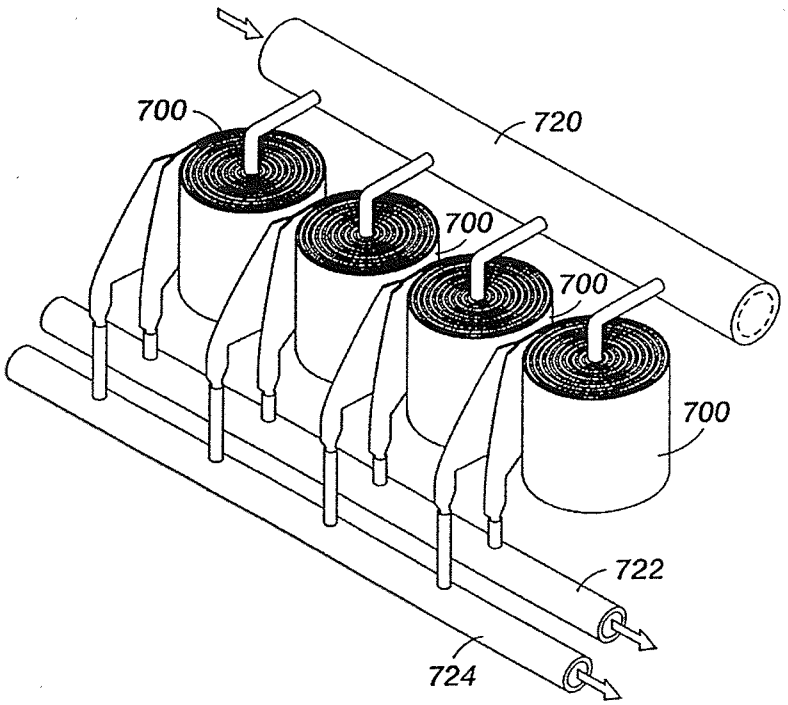

FIG. 7(b)

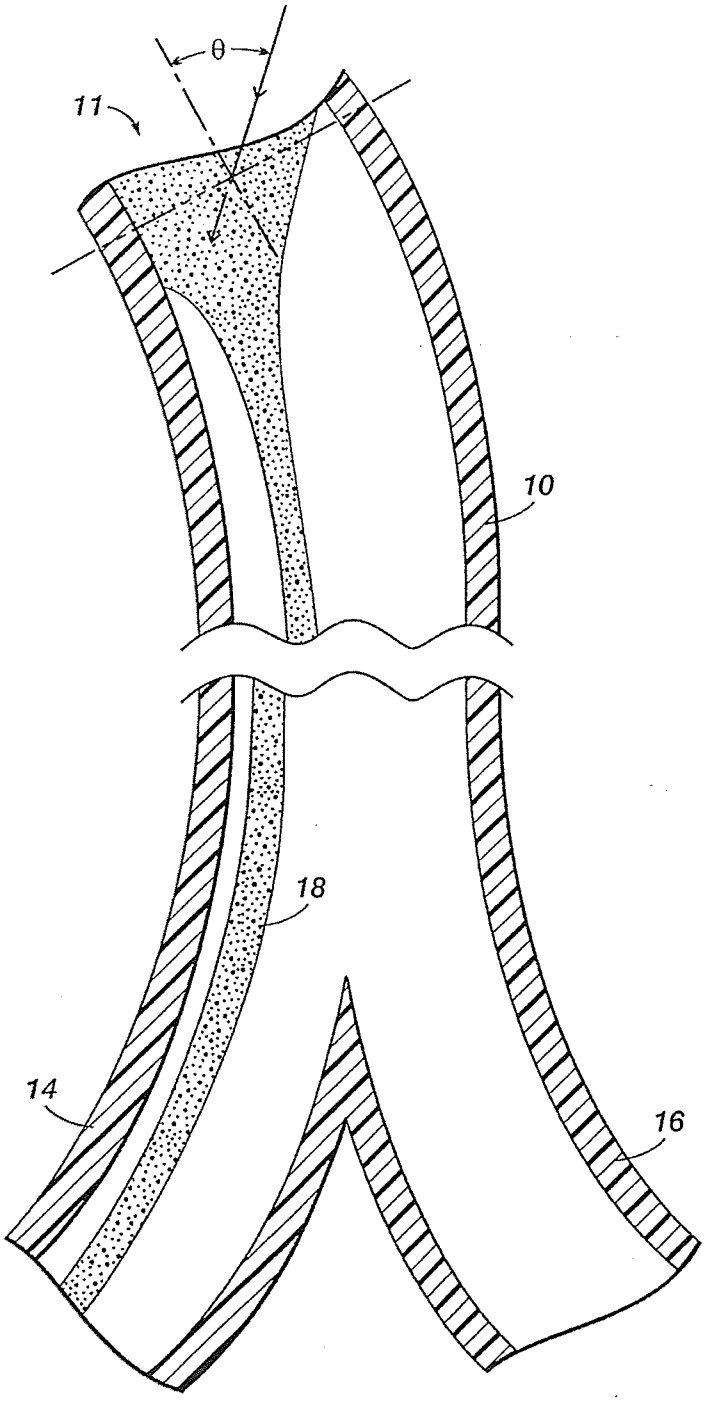

FIG. 8