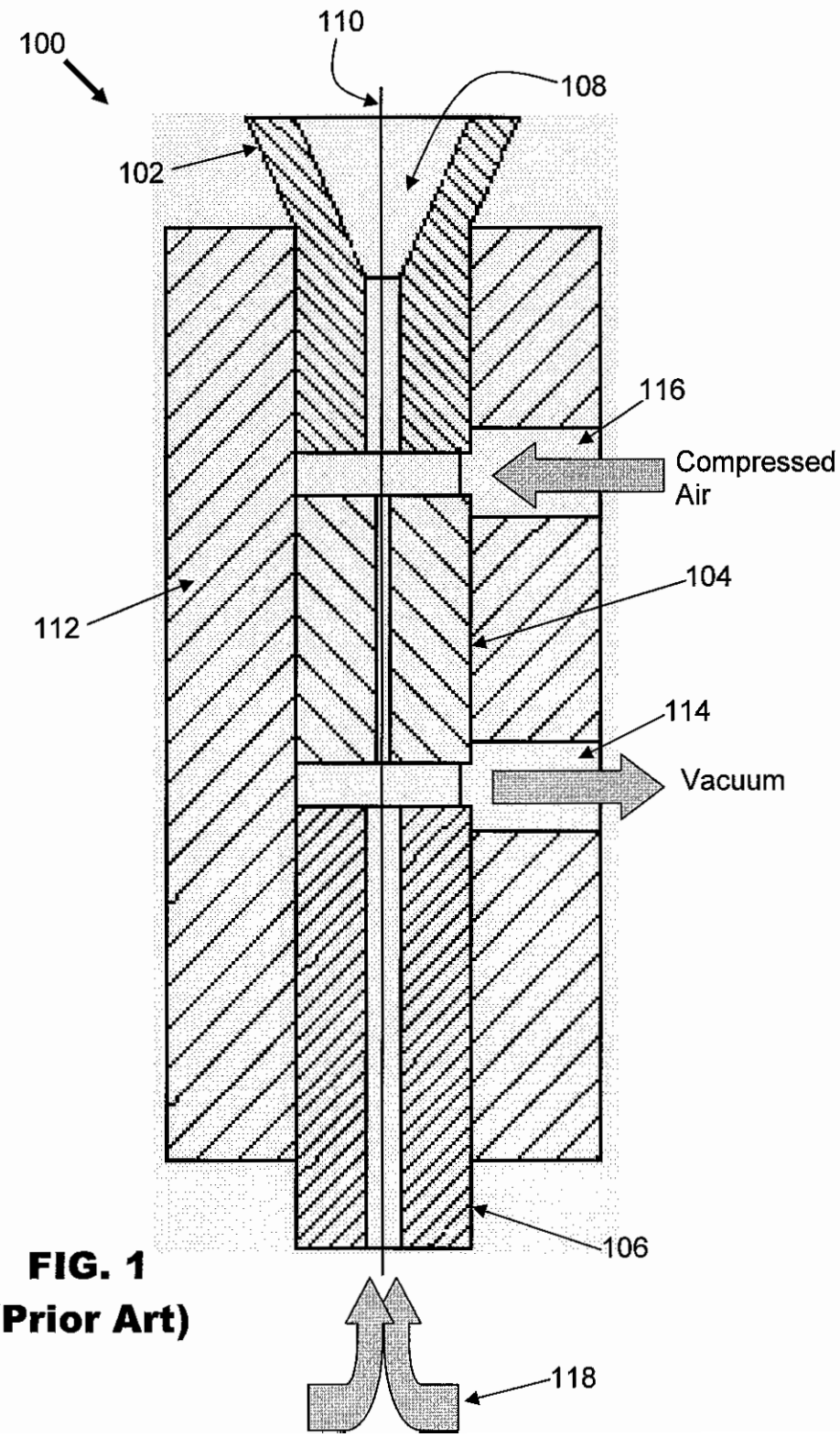

FIG. 1
(Prior Art)

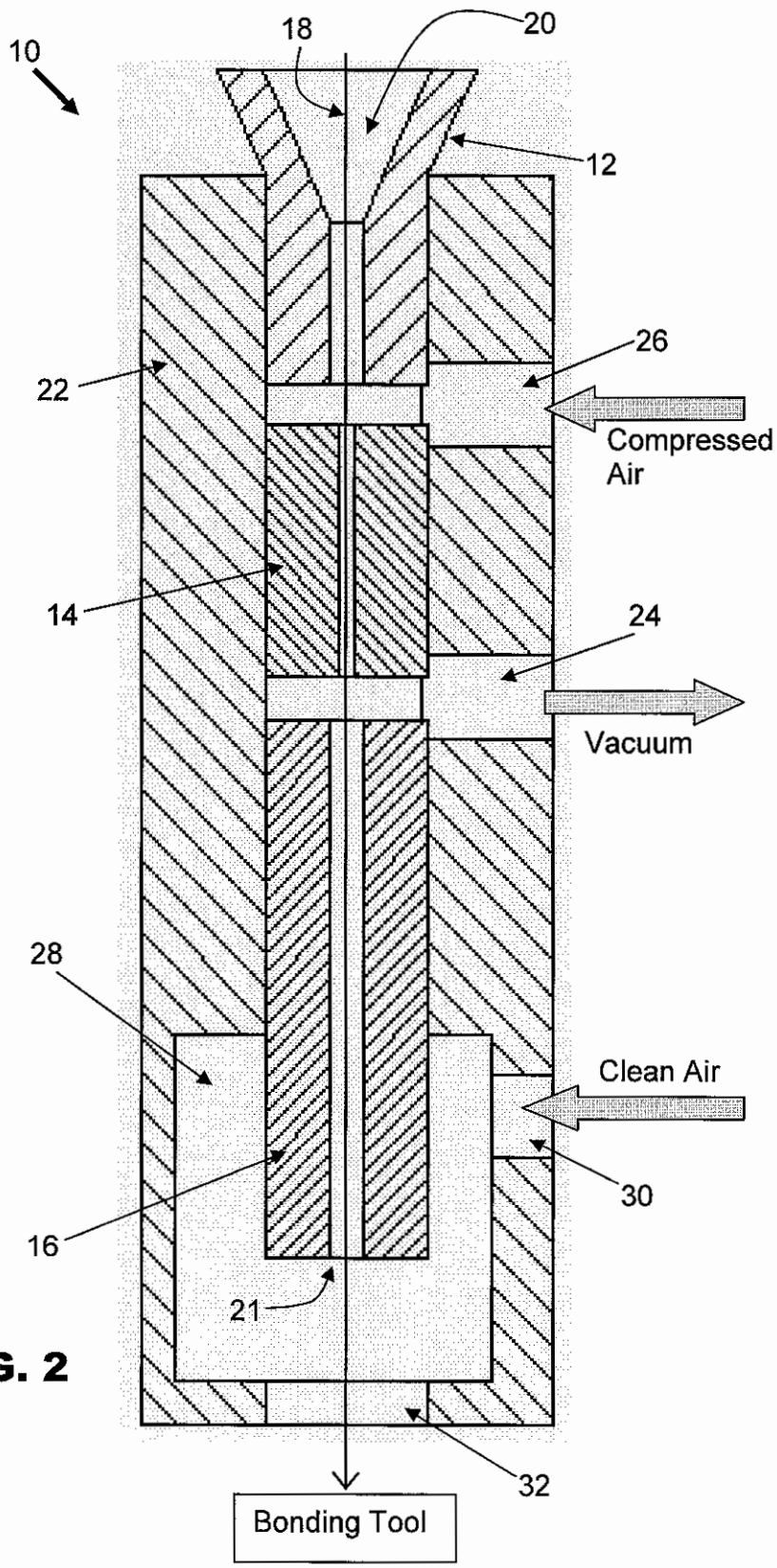
10
18
20
12
22
26
Compressed
Air
14
24
Vacuum
28
Clean Air
30
16
21
32
Bonding Tool

FIG. 2