FIG. 1

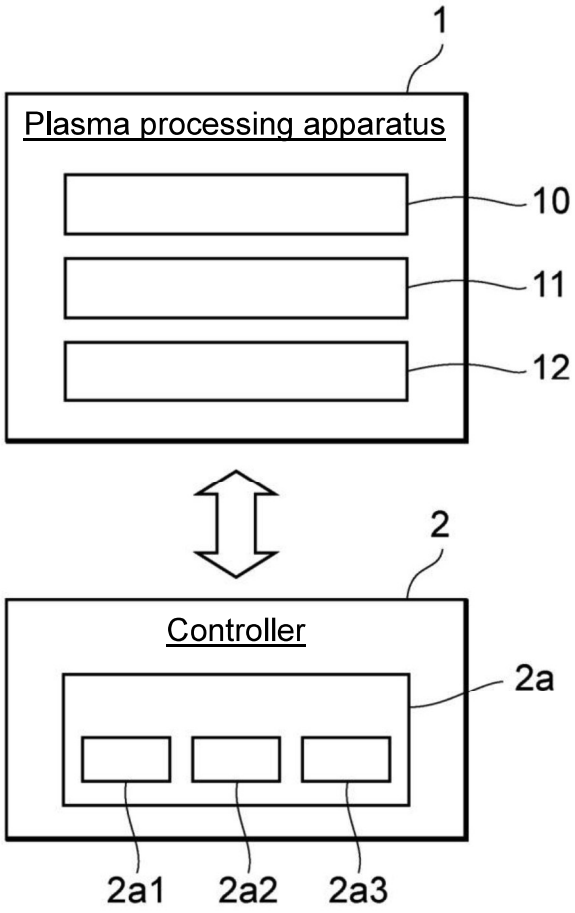
1
Plasma processing apparatus
10
11
12
2
Controller
2a
2a1
2a2
2a3

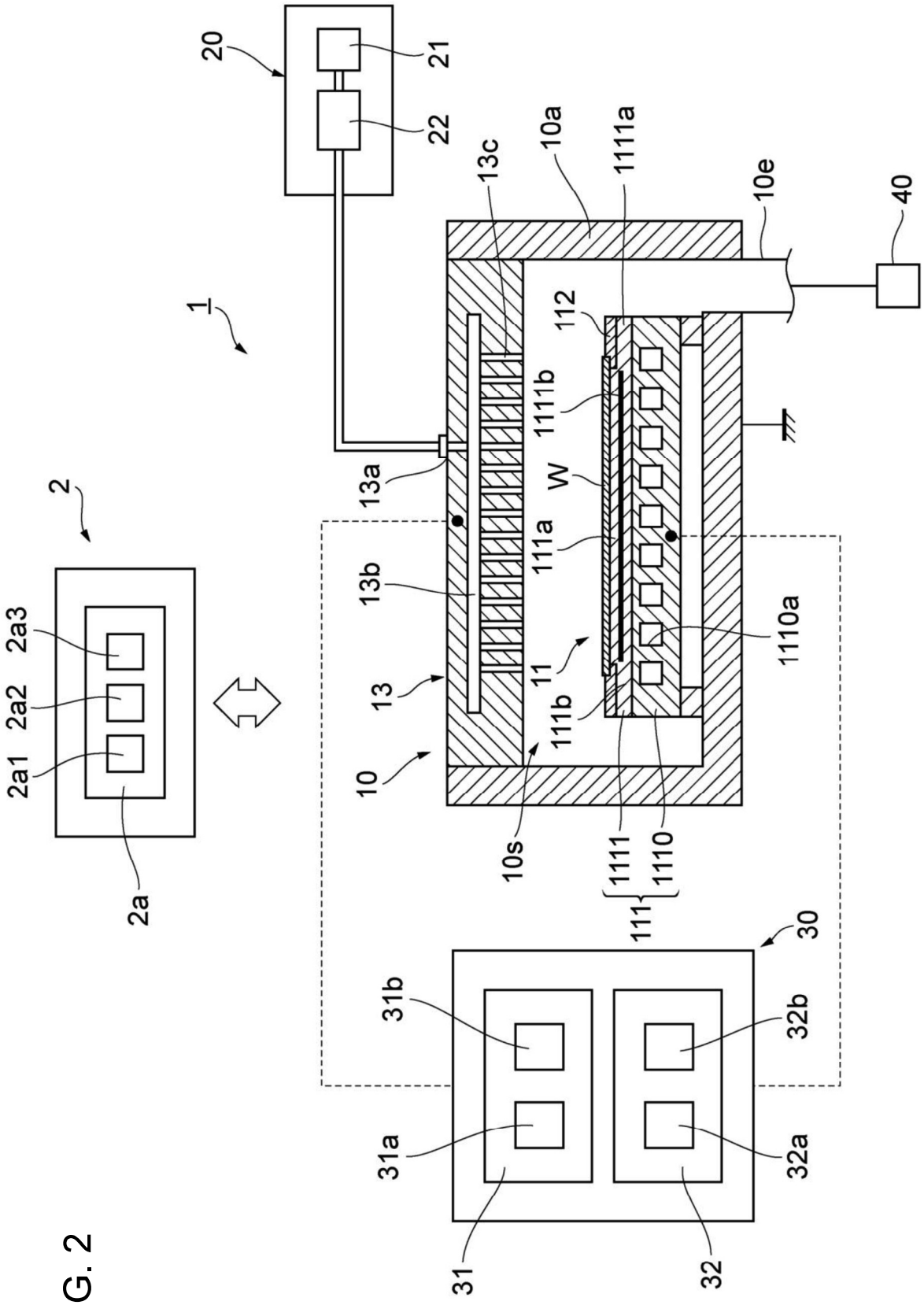
20
21
22
1
2
2a3
2a2
2a1
2a
13c
10a
1111a
10e
40
112
1111b
W
13a
111a
13b
13
11
1110a
111b
10
10s
1111
1110
111
30
31b
32b
31a
32a
31
32

FIG. 2

FIG. 3

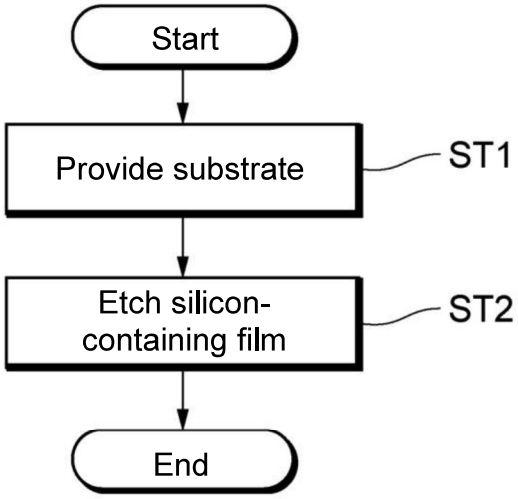
Start
Provide substrate
ST1
Etch silicon-containing film
ST2
End

FIG. 4

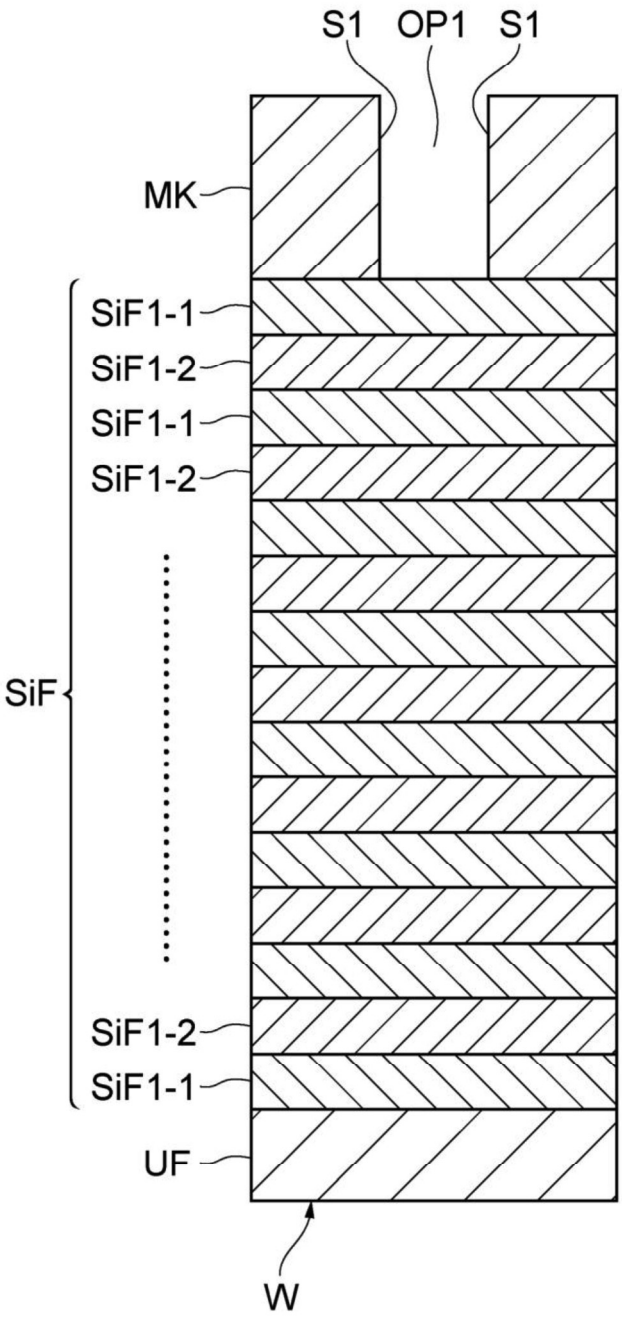

FIG. 5

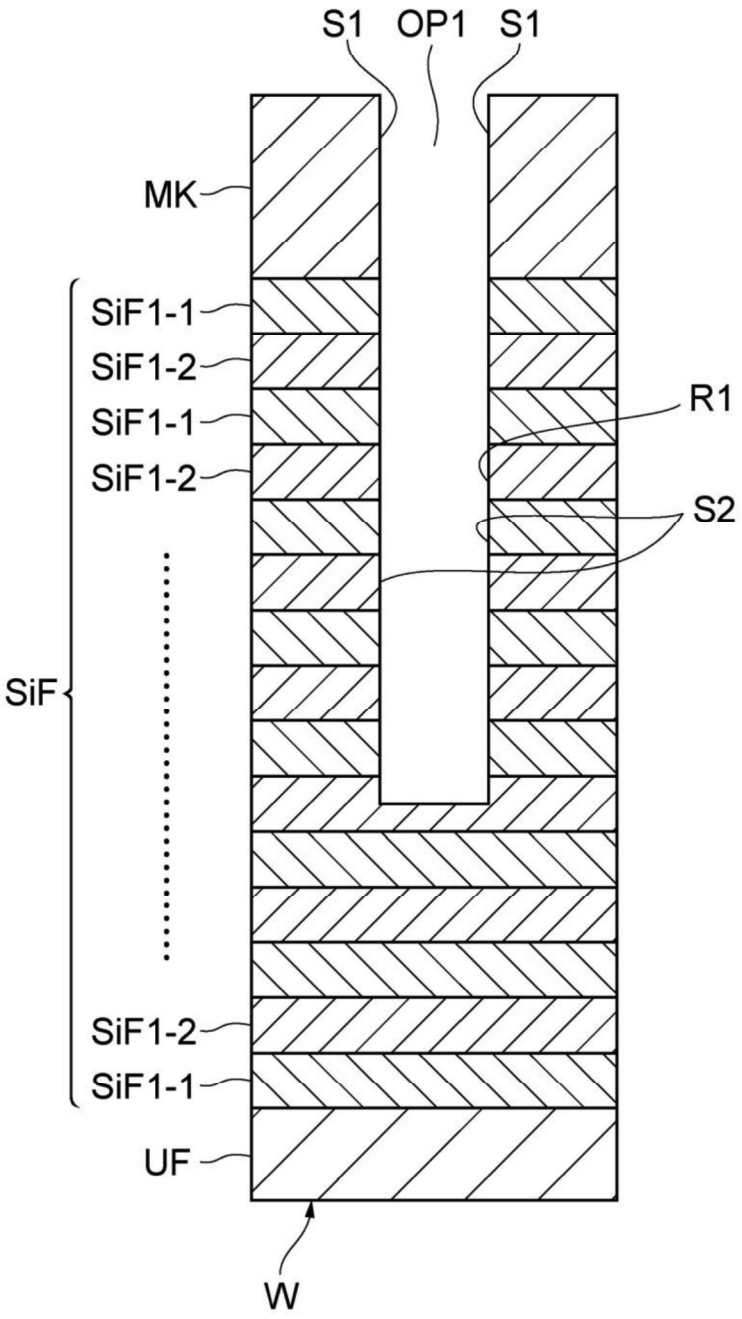

FIG. 6

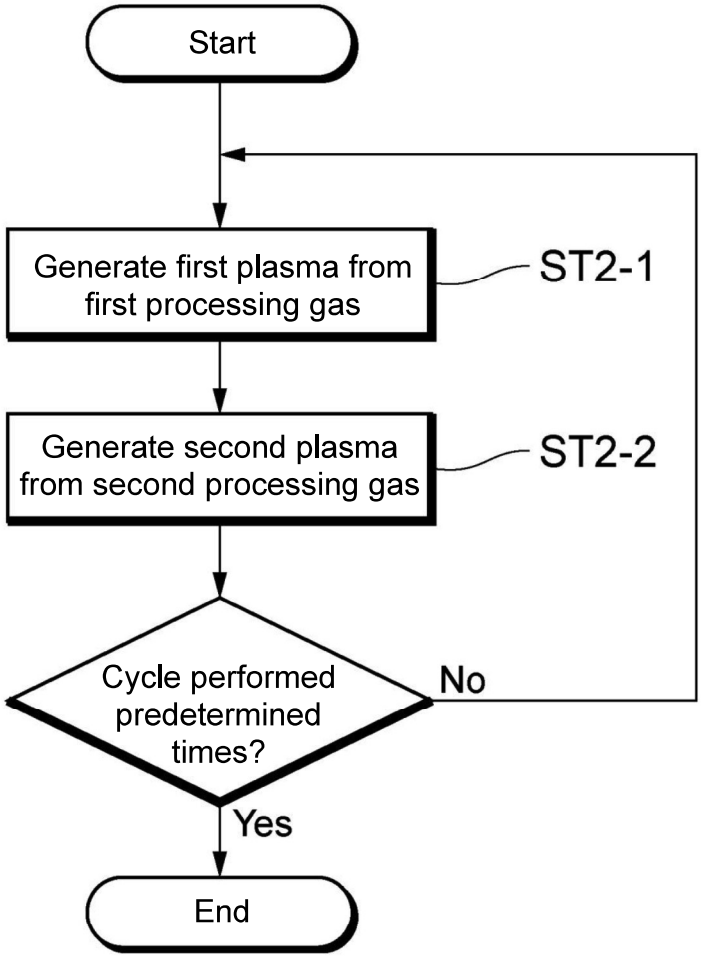
Start
Generate first plasma from first processing gas
ST2-1
Generate second plasma from second processing gas
ST2-2
Cycle performed predetermined times?
No
Yes
End

FIG. 7

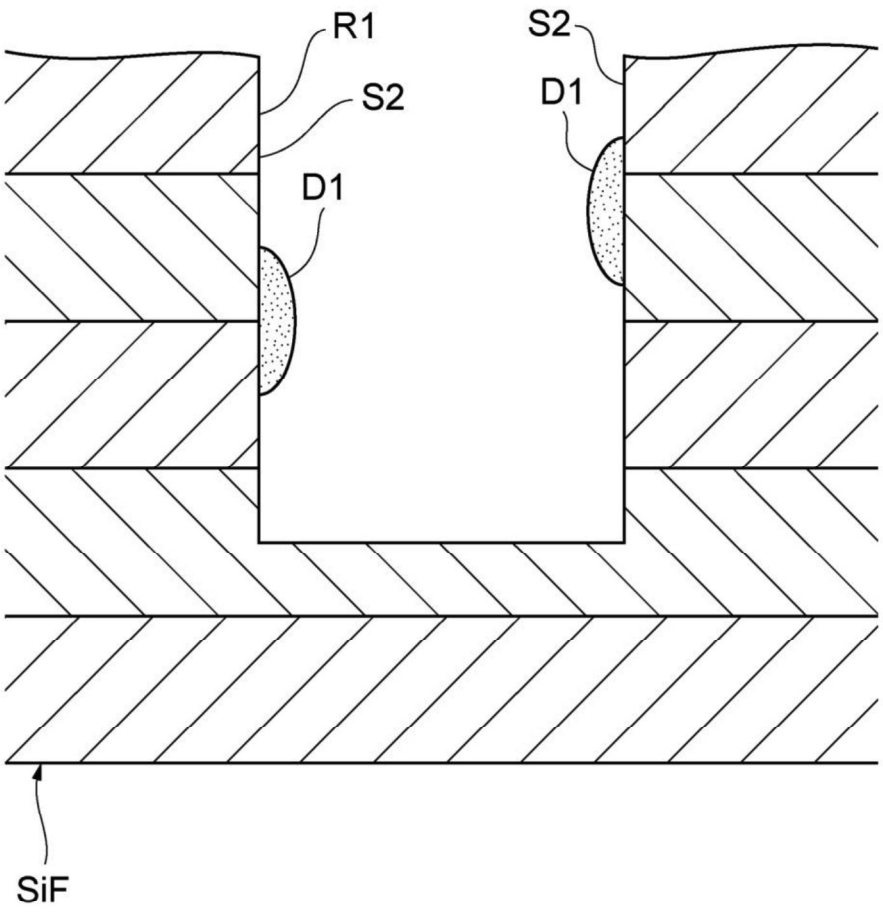

FIG. 8

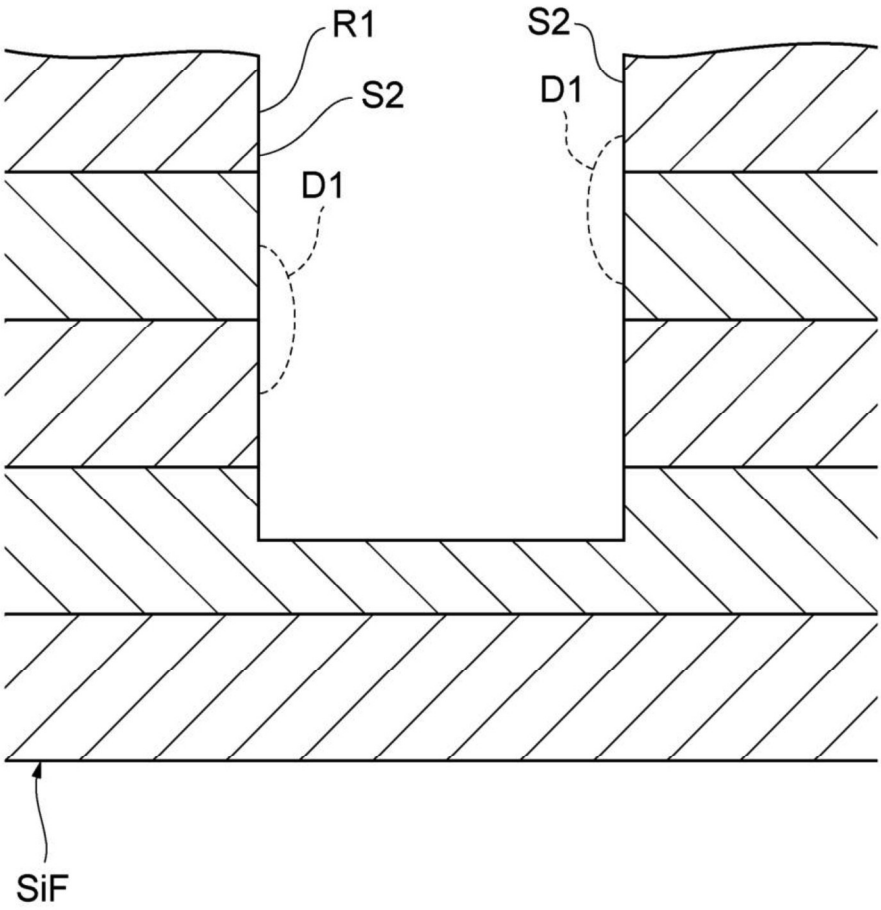

FIG. 9

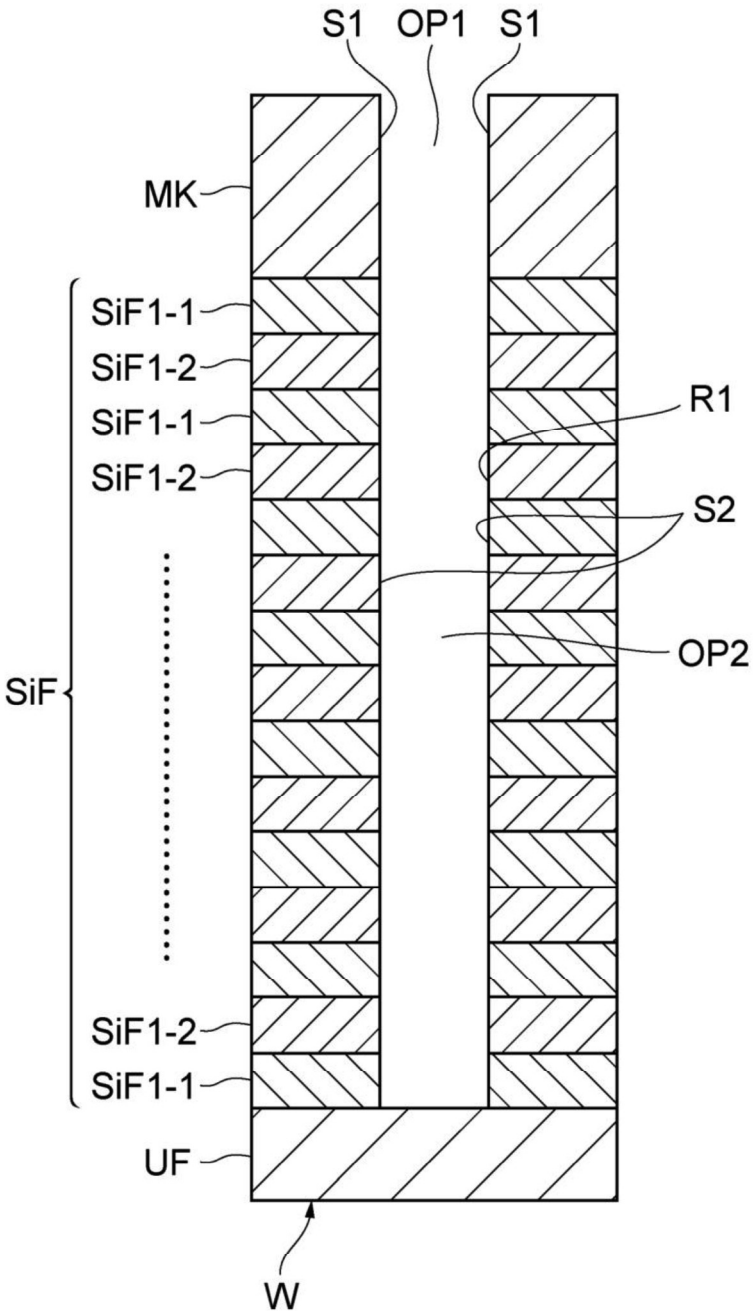
S1
OP1
S1
MK
SiF1-1
SiF1-2
SiF1-1
SiF1-2
R1
S2
OP2
SiF
SiF1-2
SiF1-1
UF
W

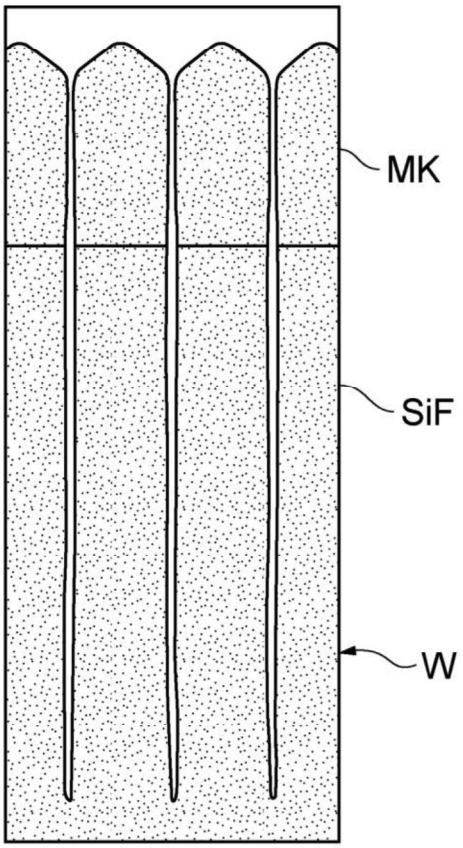


FIG. 10A

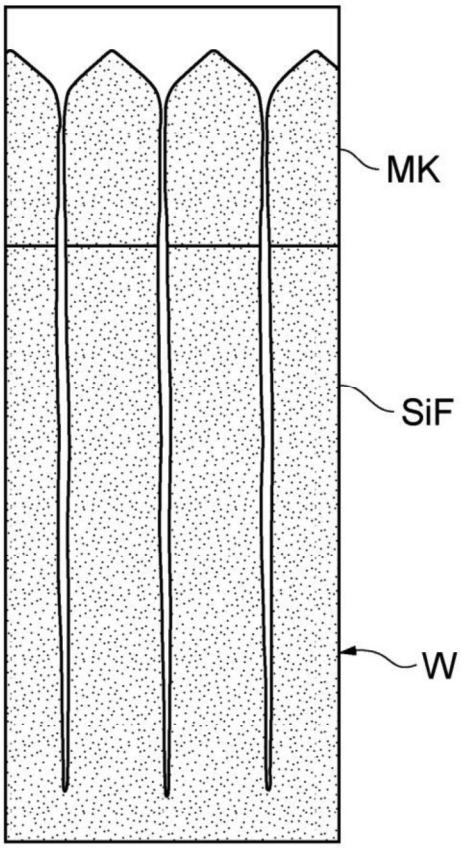


FIG. 10C

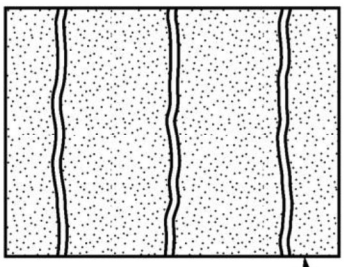


FIG. 10B

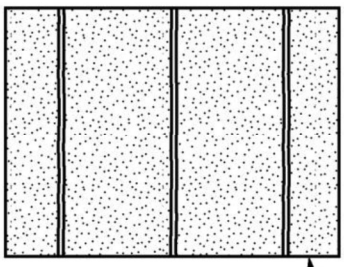


FIG. 10D

FIG. 11

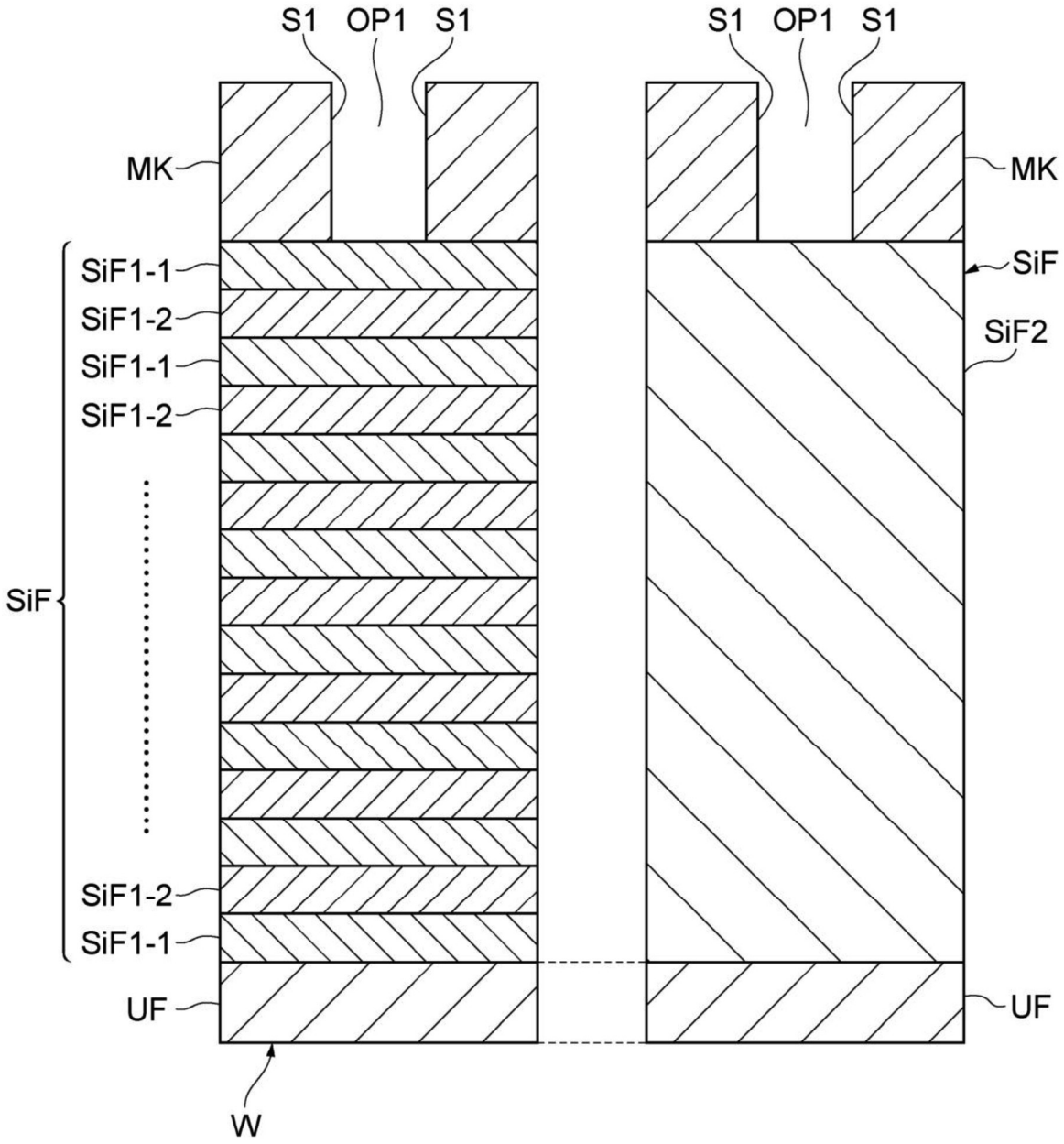
S1
OP1
S1
S1
OP1
S1
MK
MK
SiF1-1
SiF1-2
SiF1-1
SiF1-2
SiF
SiF
SiF2
SiF1-2
SiF1-1
UF
UF
W

FIG. 12

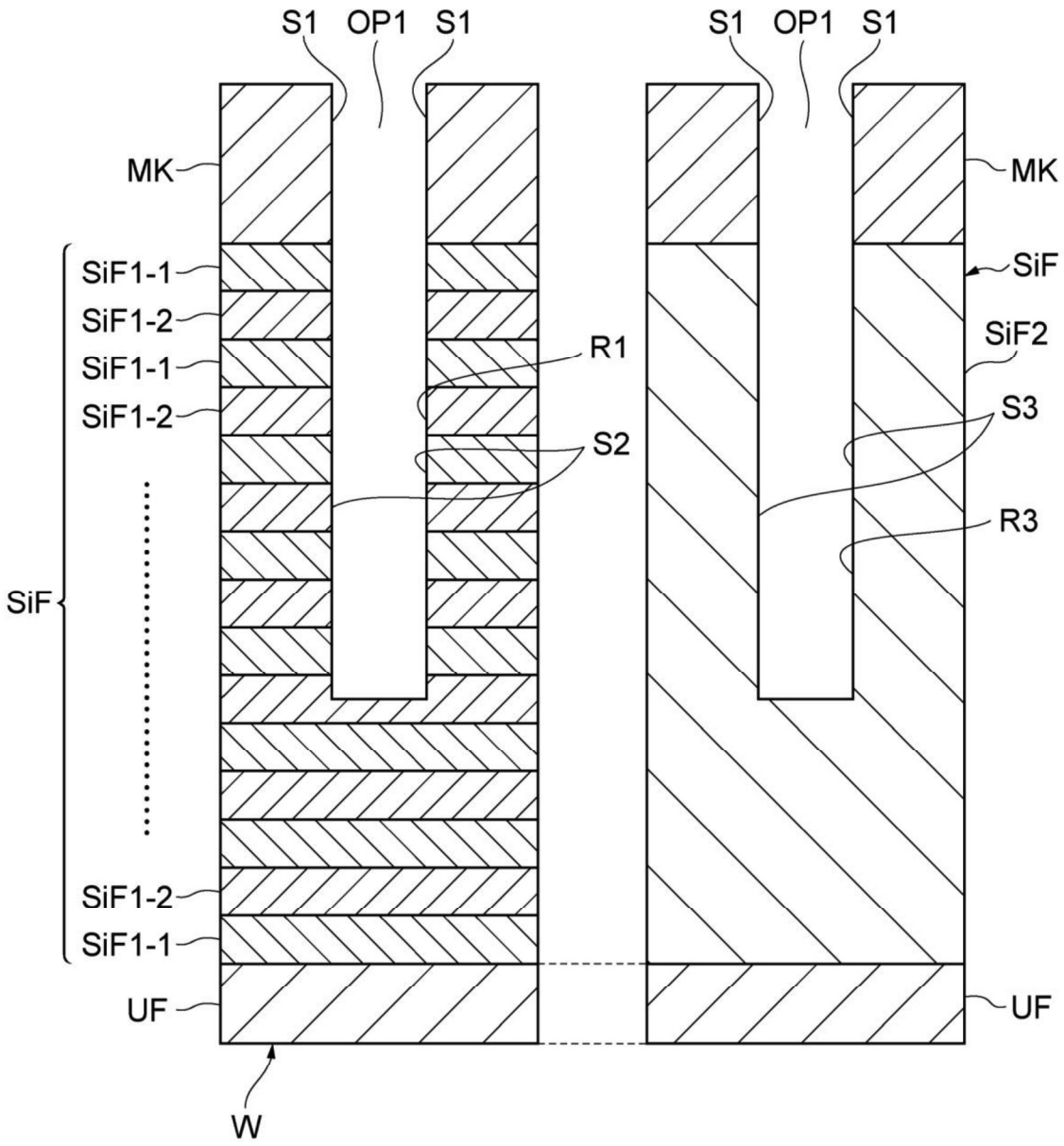
S1
OP1
S1
S1
OP1
S1
MK
MK
SiF1-1
SiF1-2
SiF1-1
SiF1-2
SiF
SiF
SiF2
R1
S2
S3
R3
SiF
SiF1-2
SiF1-1
UF
UF
W