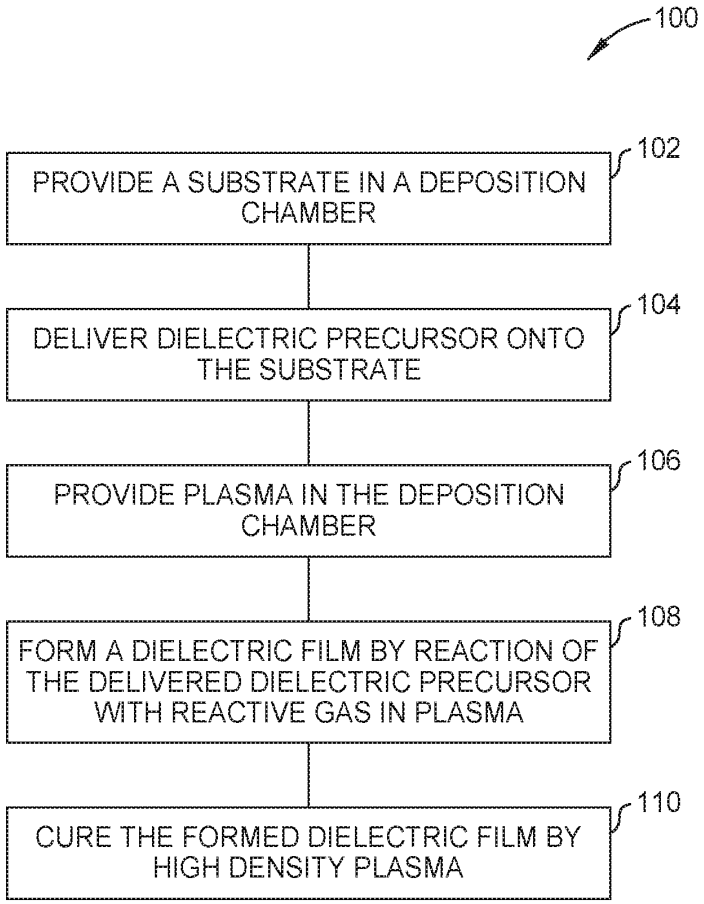
100
PROVIDE A SUBSTRATE IN A DEPOSITION CHAMBER
102
DELIVER DIELECTRIC PRECURSOR ONTO THE SUBSTRATE
104
PROVIDE PLASMA IN THE DEPOSITION CHAMBER
106
FORM A DIELECTRIC FILM BY REACTION OF THE DELIVERED DIELECTRIC PRECURSOR WITH REACTIVE GAS IN PLASMA
108
CURE THE FORMED DIELECTRIC FILM BY HIGH DENSITY PLASMA
110

FIG. 1

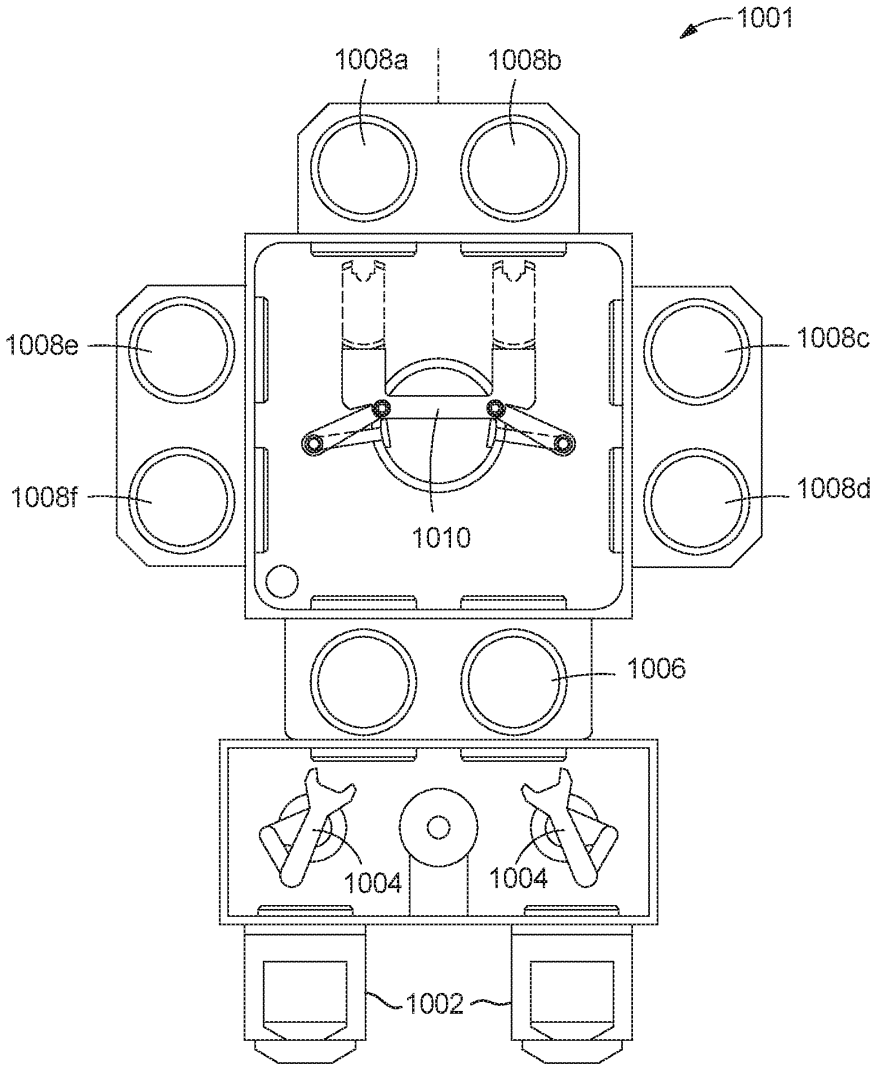
1001
1008a
1008b
1008e
1008c
1008f
1008d
1010
1006
1004
1004
1002

FIG. 2

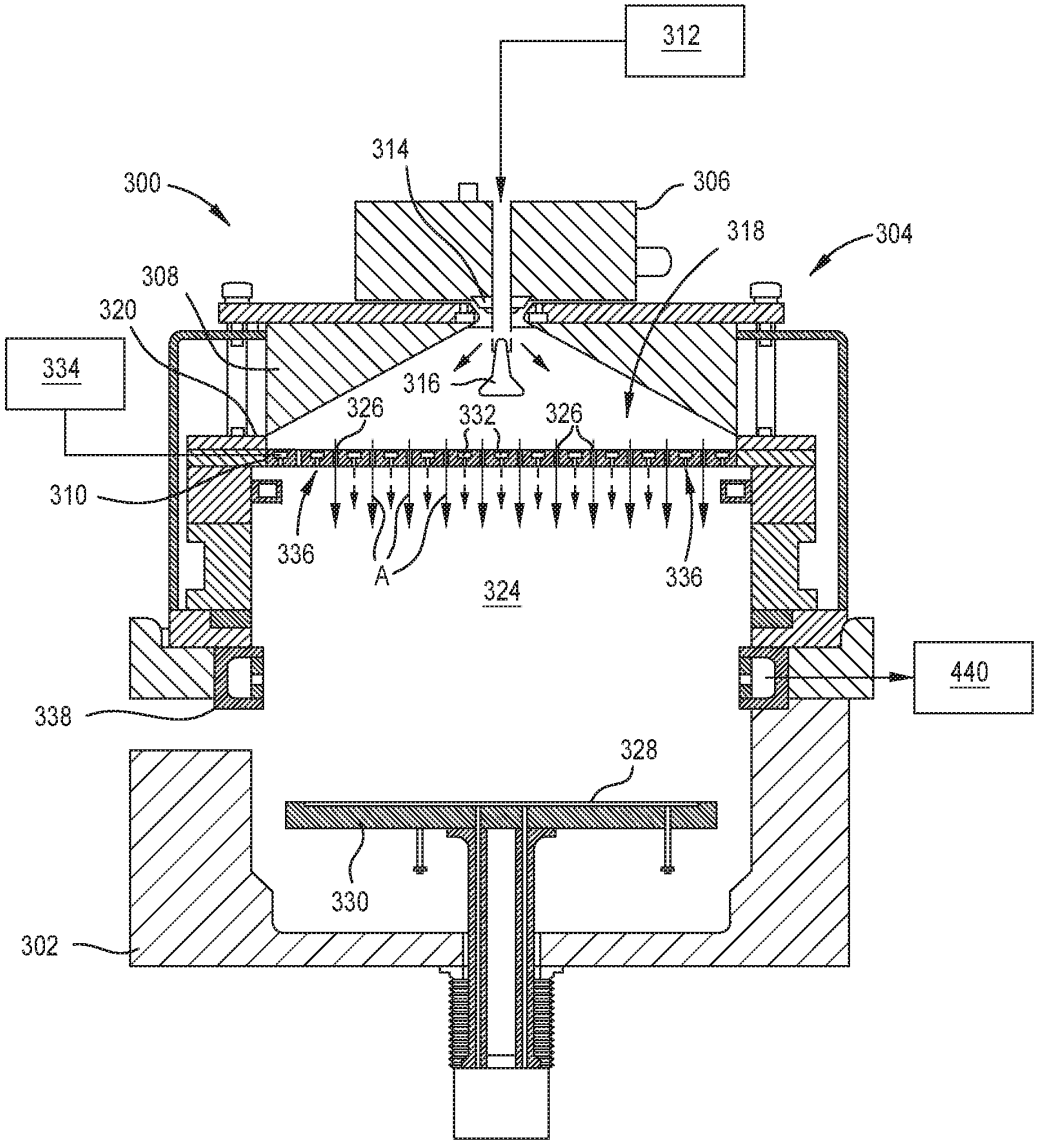
312
314
300
306
318
304
308
320
334
316
326
332
326
310
336
A
336
324
440
338
328
330
302

FIG. 3A

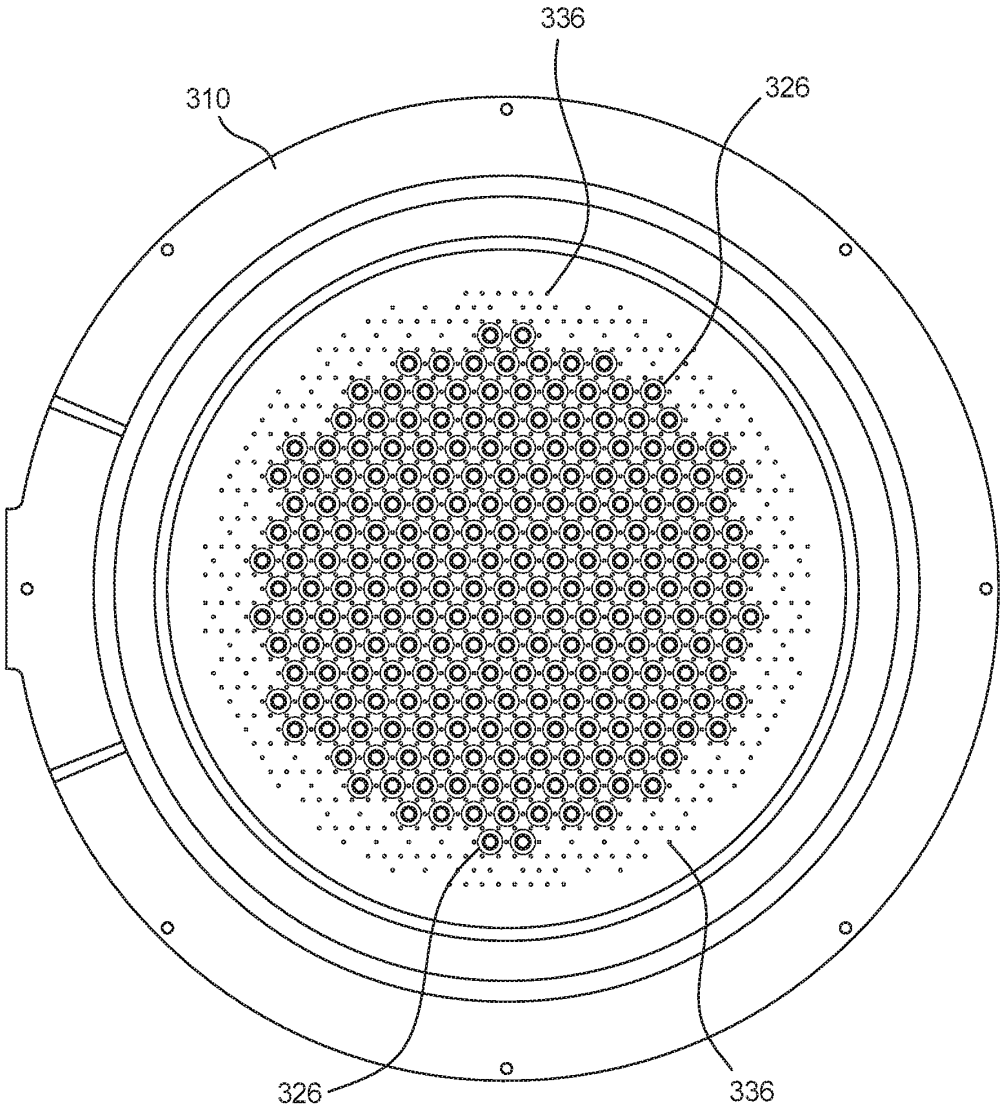

FIG. 3B

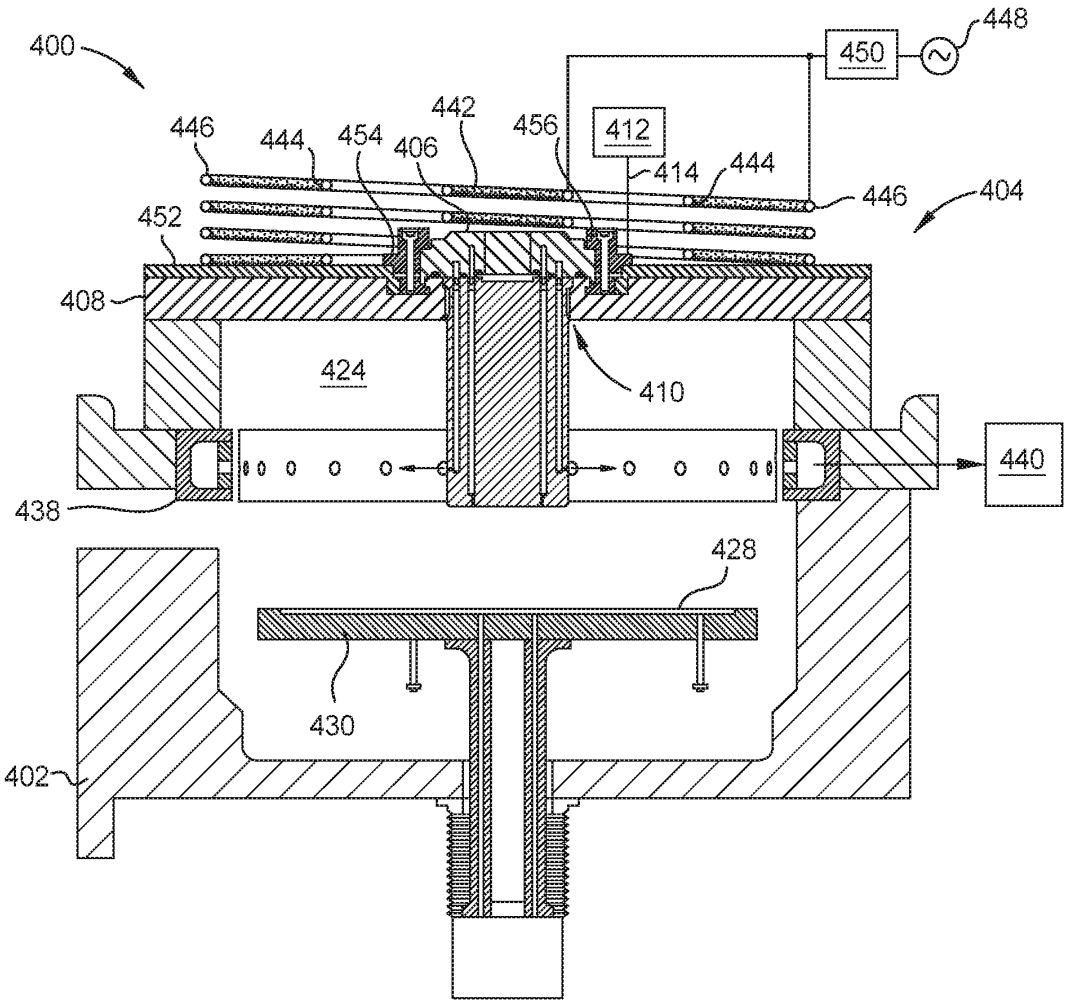
400
448
450
446
444
454
442
406
456
412
414
444
446
404
452
408
424
410
440
438
428
430
402

FIG. 4

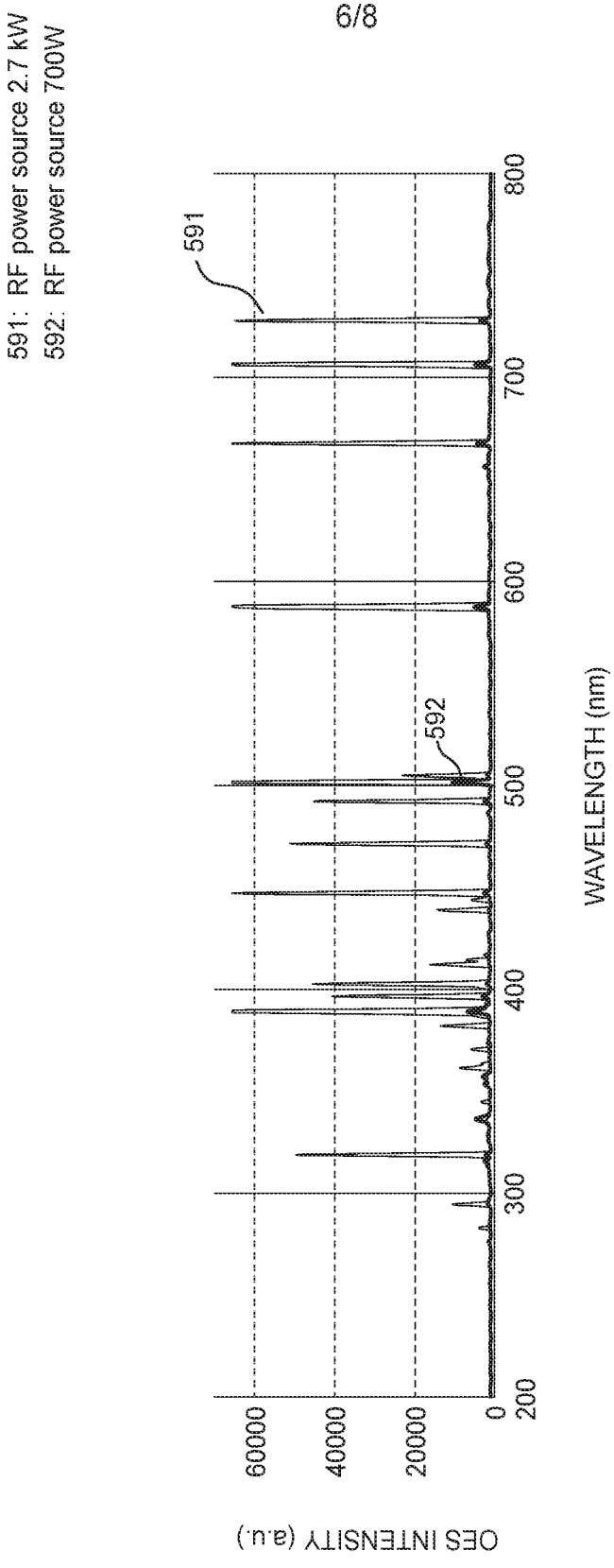
591: RF power source 2.7 kW
592: RF power source 700W
591
592
OES INTENSITY (a.u.)
60000
40000
20000
0
200
300
400
500
600
700
800
WAVELENGTH (nm)

FIG. 5A

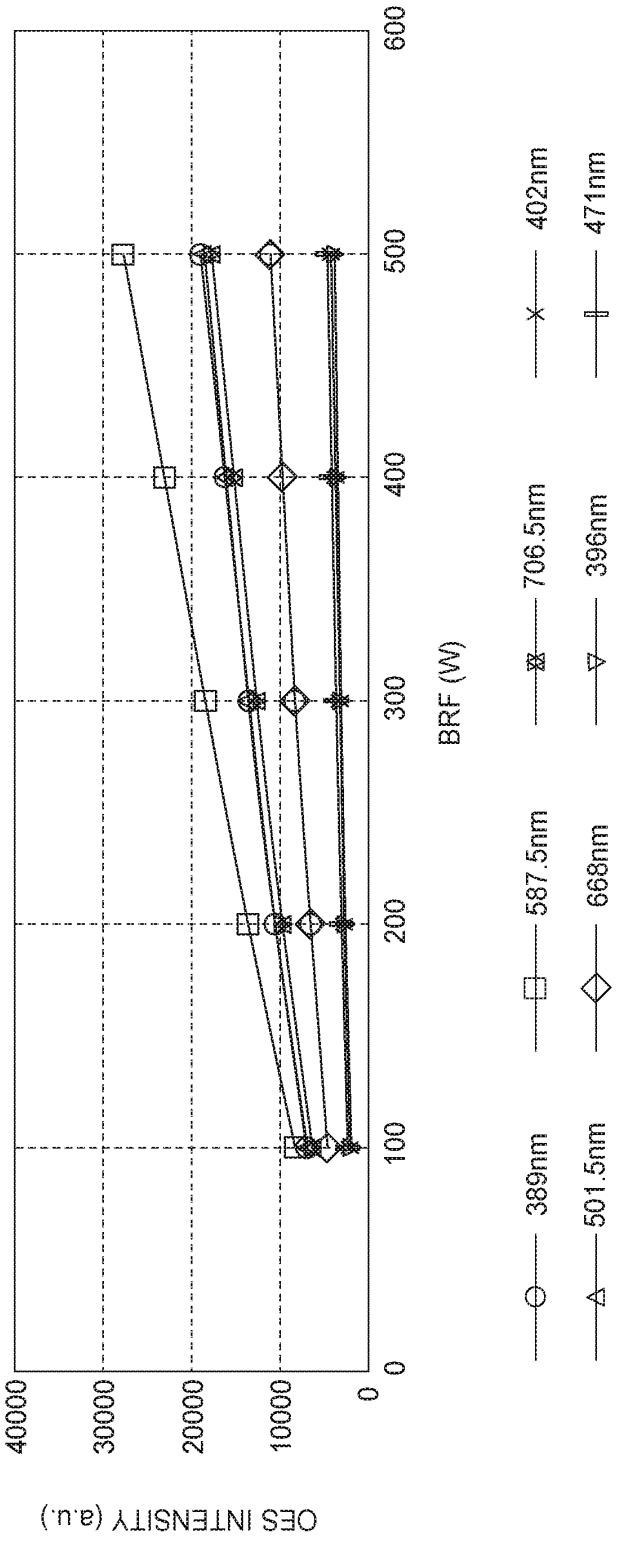
OES INTENSITY (a.u.)
40000
30000
20000
10000
0
0
100
200
300
400
500
600
BRF (W)
389nm
501.5nm
587.5nm
668nm
706.5nm
396nm
402nm
471nm

FIG. 5B

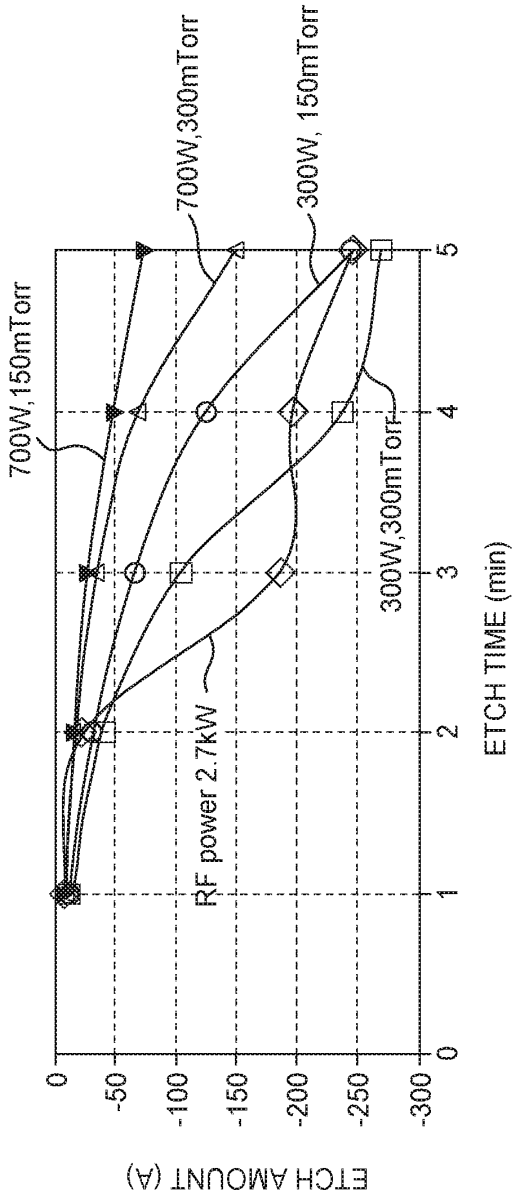
700W,150mTorr
700W,300mTorr
300W, 150mTorr
300W,300mTorr
RF power 2.7kW
ETCH AMOUNT (Å)
0
-50
-100
-150
-200
-250
-300
ETCH TIME (min)
0
1
2
3
4
5

FIG. 6