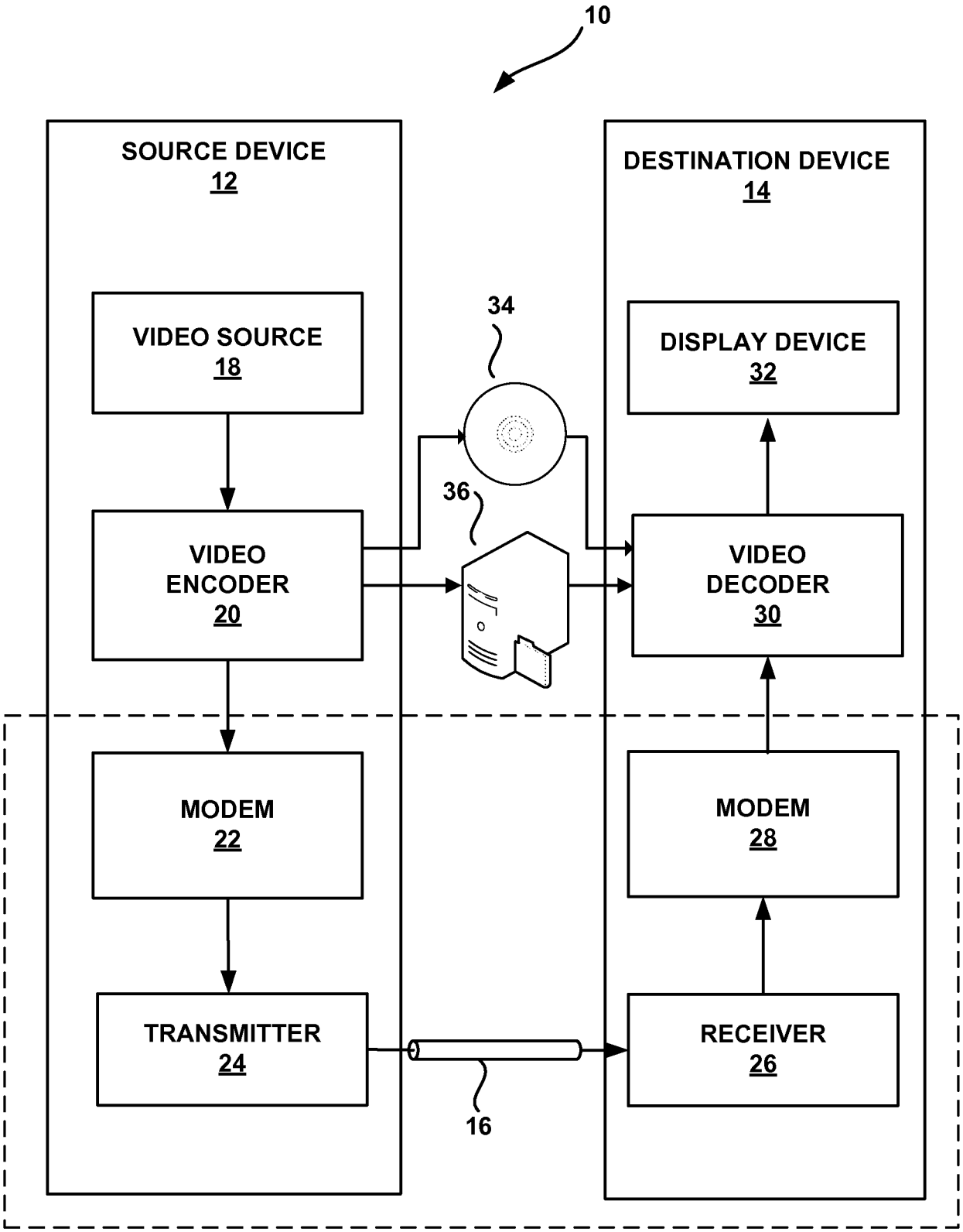
10
SOURCE DEVICE
12
DESTINATION DEVICE
14
VIDEO SOURCE
18
34
DISPLAY DEVICE
32
36
VIDEO
ENCODER
20
VIDEO
DECODER
30
MODEM
22
MODEM
28
TRANSMITTER
24
RECEIVER
26
16

FIG. 1

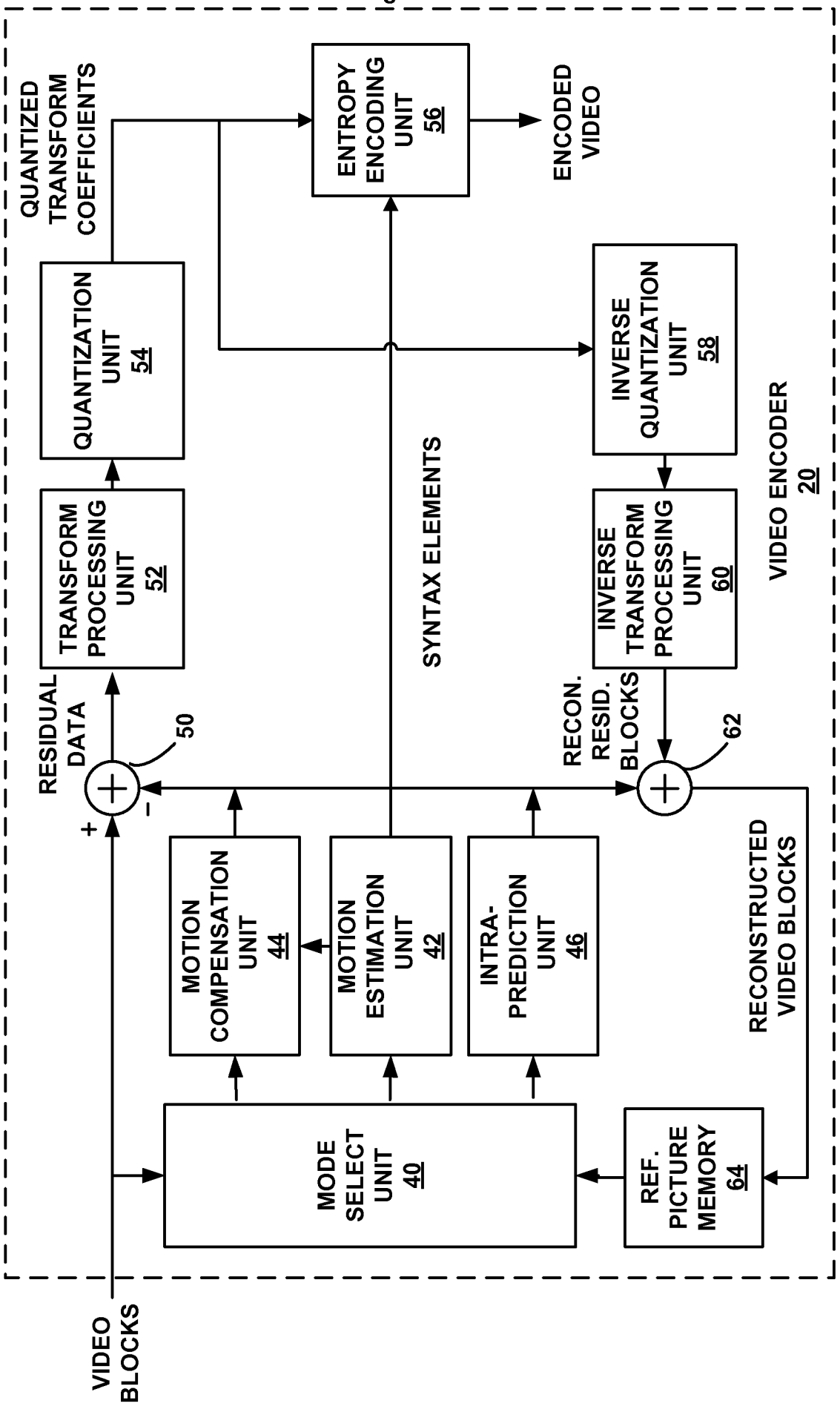
VIDEO ENCODER
20
VIDEO BLOCKS
RESIDUAL DATA
50
+
-
TRANSFORM PROCESSING UNIT
52
QUANTIZATION UNIT
54
QUANTIZED TRANSFORM COEFFICIENTS
ENTROPY ENCODING UNIT
56
ENCODED VIDEO
INVERSE QUANTIZATION UNIT
58
INVERSE TRANSFORM PROCESSING UNIT
60
RECON. RESID. BLOCKS
62
RECONSTRUCTED VIDEO BLOCKS
SYNTAX ELEMENTS
MOTION COMPENSATION UNIT
44
MOTION ESTIMATION UNIT
42
INTRA-PREDICTION UNIT
46
MODE SELECT UNIT
40
REF. PICTURE MEMORY
64

FIG. 2

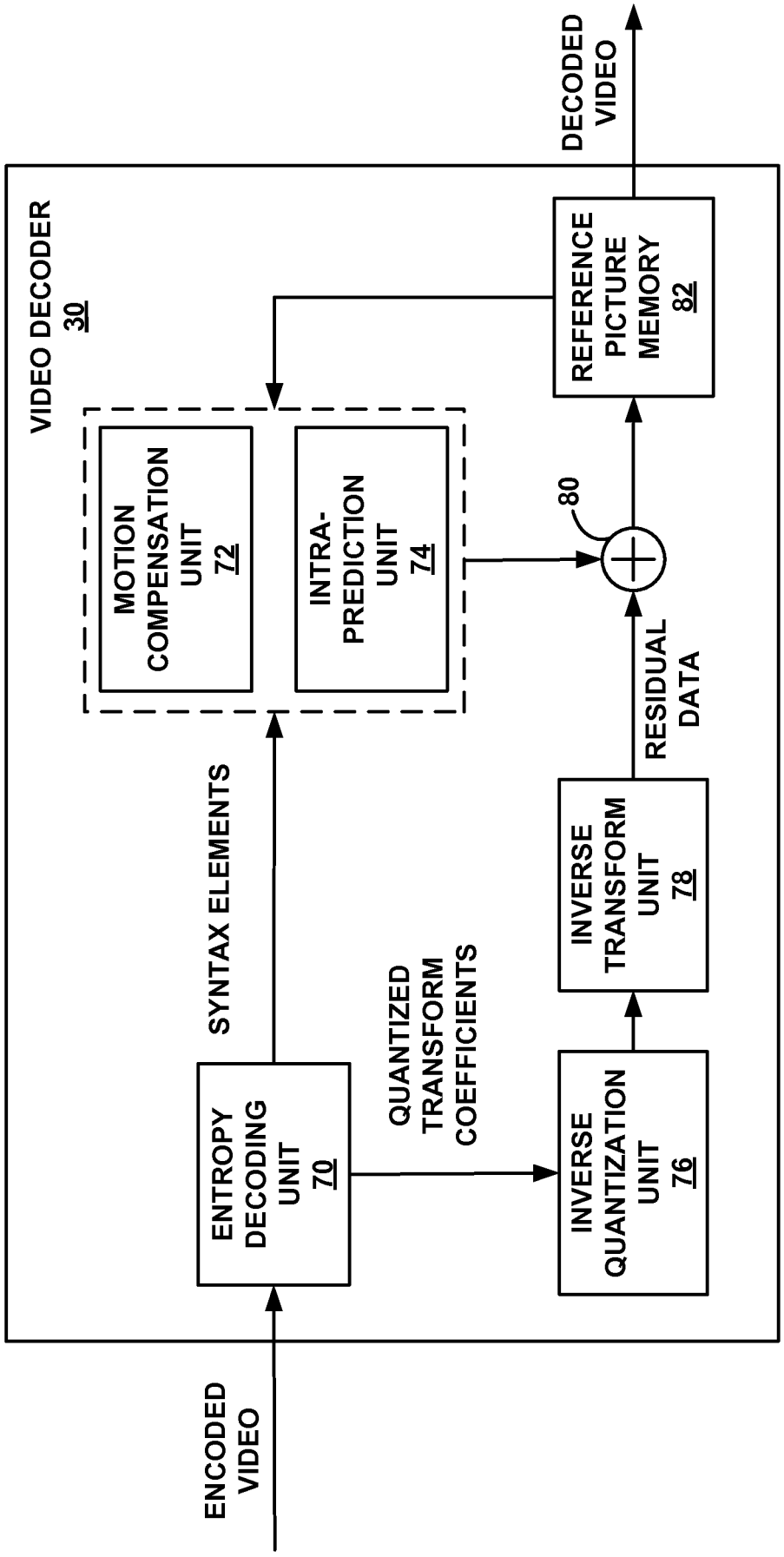
VIDEO DECODER
30
ENCODED VIDEO
ENTROPY DECODING UNIT
70
SYNTAX ELEMENTS
MOTION COMPENSATION UNIT
72
INTRA-PREDICTION UNIT
74
QUANTIZED TRANSFORM COEFFICIENTS
INVERSE QUANTIZATION UNIT
76
INVERSE TRANSFORM UNIT
78
RESIDUAL DATA
80
REFERENCE PICTURE MEMORY
82
DECODED VIDEO

FIG. 3

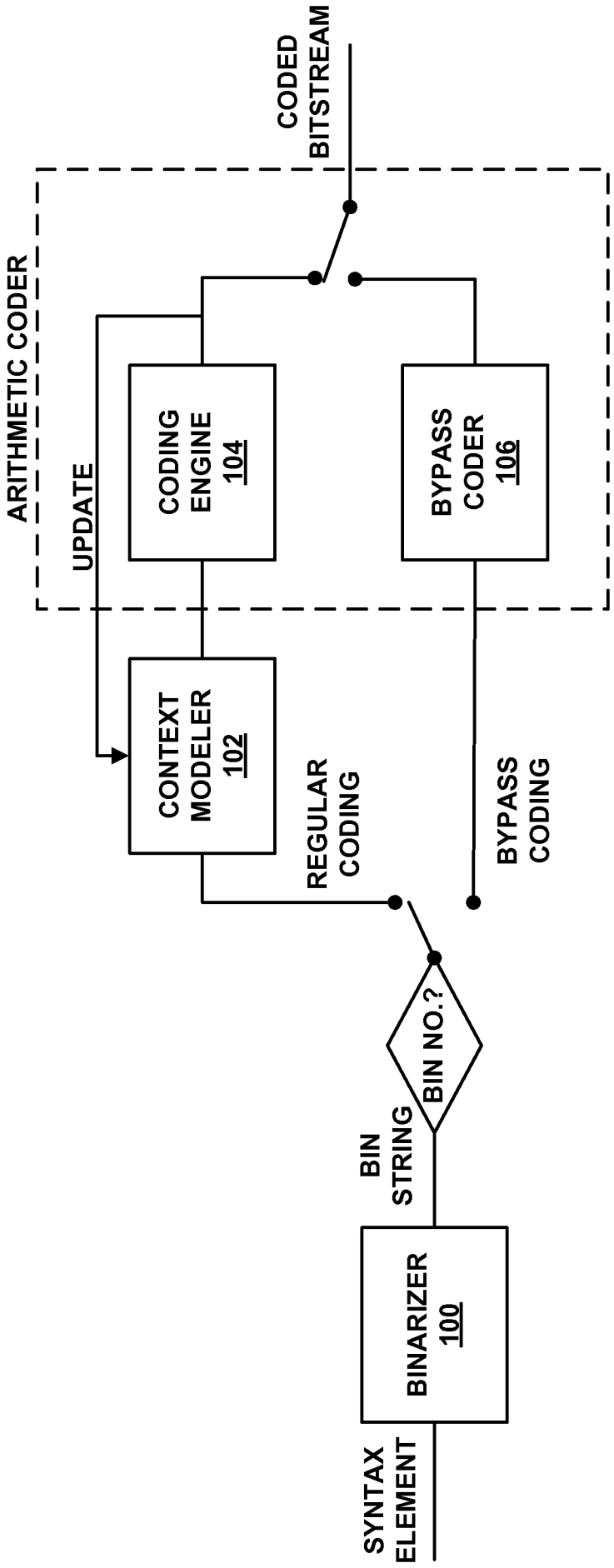
SYNTAX ELEMENT
BINARIZER 100
BIN STRING
BIN NO.?
REGULAR CODING
BYPASS CODING
CONTEXT MODELER 102
ARITHMETIC CODER
UPDATE
CODING ENGINE 104
BYPASS CODER 106
CODED BITSTREAM

FIG. 4

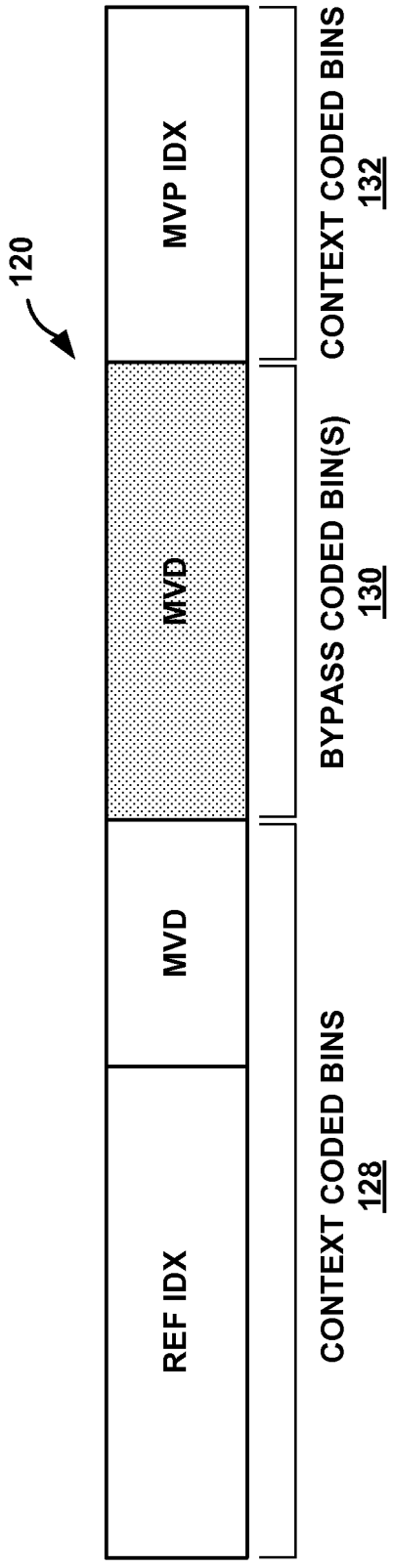
120
REF IDX
MVD
MVP IDX
CONTEXT CODED BINS
128
BYPASS CODED BIN(S)
130
CONTEXT CODED BINS
132

FIG. 5A

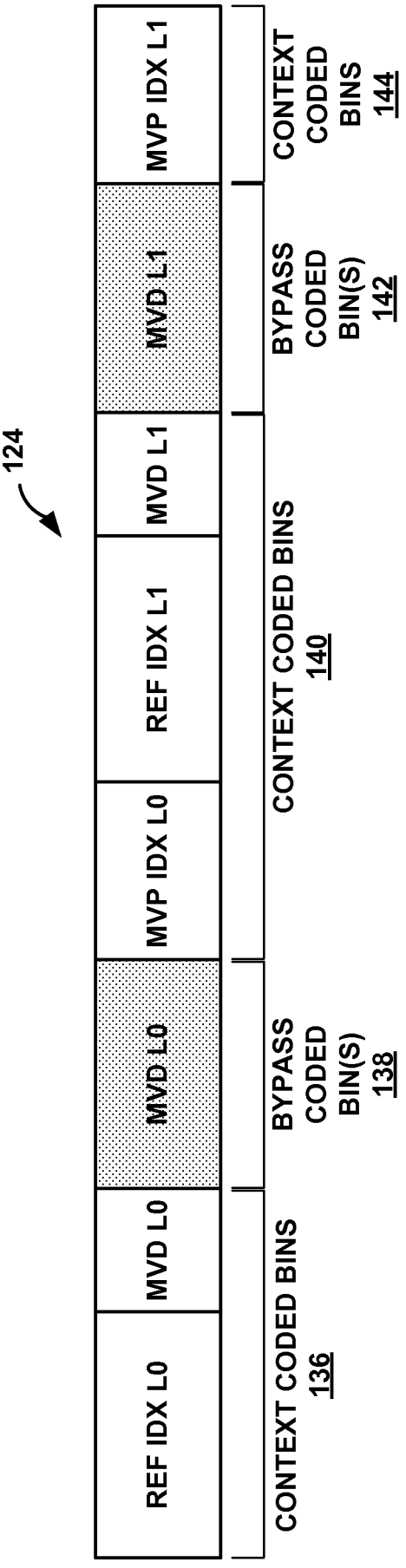
124
REF IDX L0
MVD L0
MVP IDX L0
REF IDX L1
MVD L1
MVP IDX L1
CONTEXT CODED BINS
136
BYPASS CODED BIN(S)
138
CONTEXT CODED BINS
140
BYPASS CODED BIN(S)
142
CONTEXT CODED BINS
144

FIG. 5B

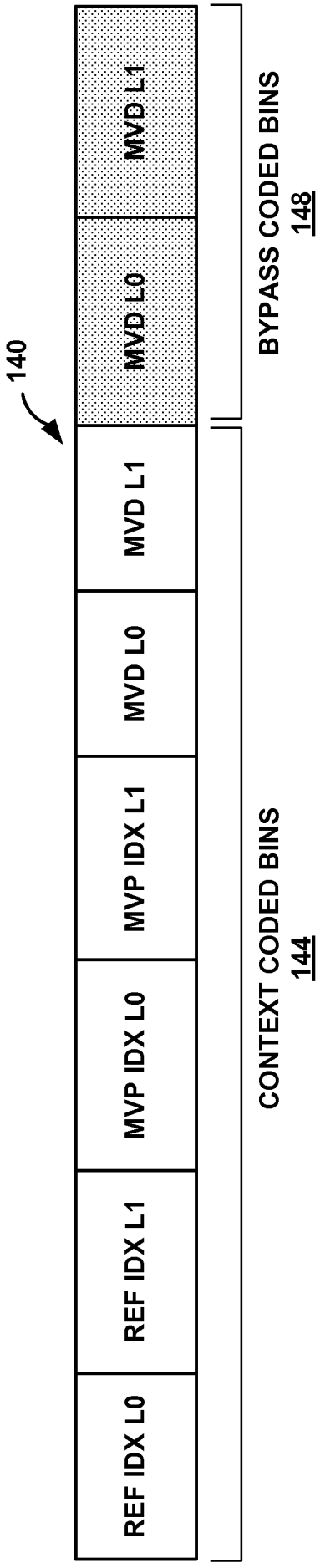
140
REF IDX L0
REF IDX L1
MVP IDX L0
MVP IDX L1
MVD L0
MVD L1
CONTEXT CODED BINS
144
BYPASS CODED BINS
148

FIG. 6

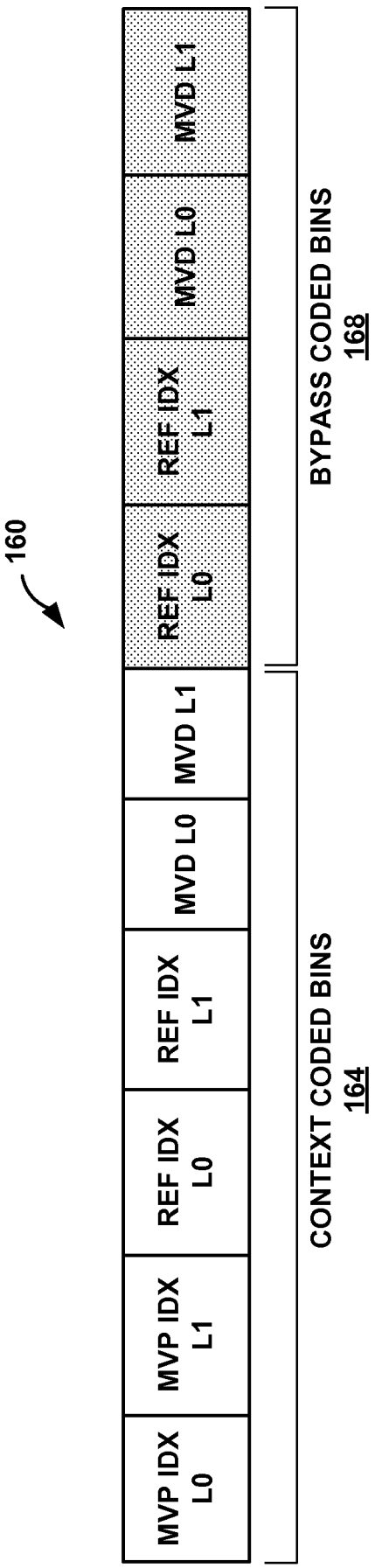
160
MVP IDX L0
MVP IDX L1
REF IDX L0
REF IDX L1
MVD L0
MVD L1
CONTEXT CODED BINS
164
BYPASS CODED BINS
168

FIG. 7

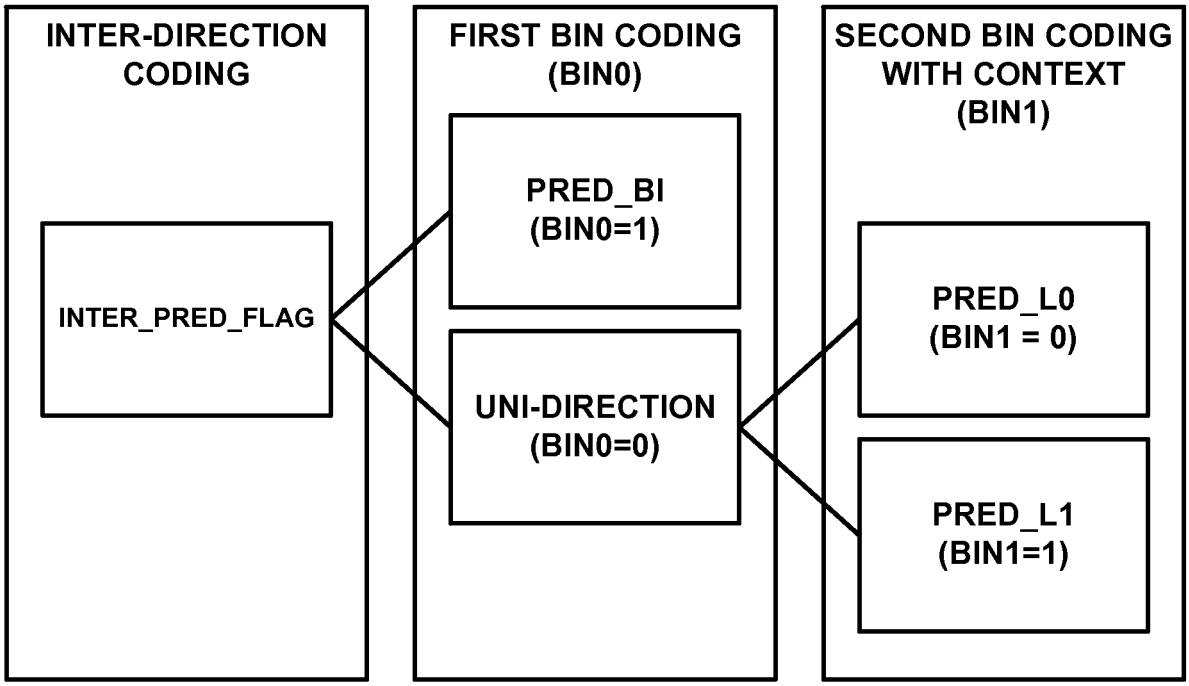
INTER-DIRECTION CODING
INTER_PRED_FLAG
FIRST BIN CODING (BIN0)
PRED_BI (BIN0=1)
UNI-DIRECTION (BIN0=0)
SECOND BIN CODING WITH CONTEXT (BIN1)
PRED_L0 (BIN1 = 0)
PRED_L1 (BIN1=1)

FIG. 8A

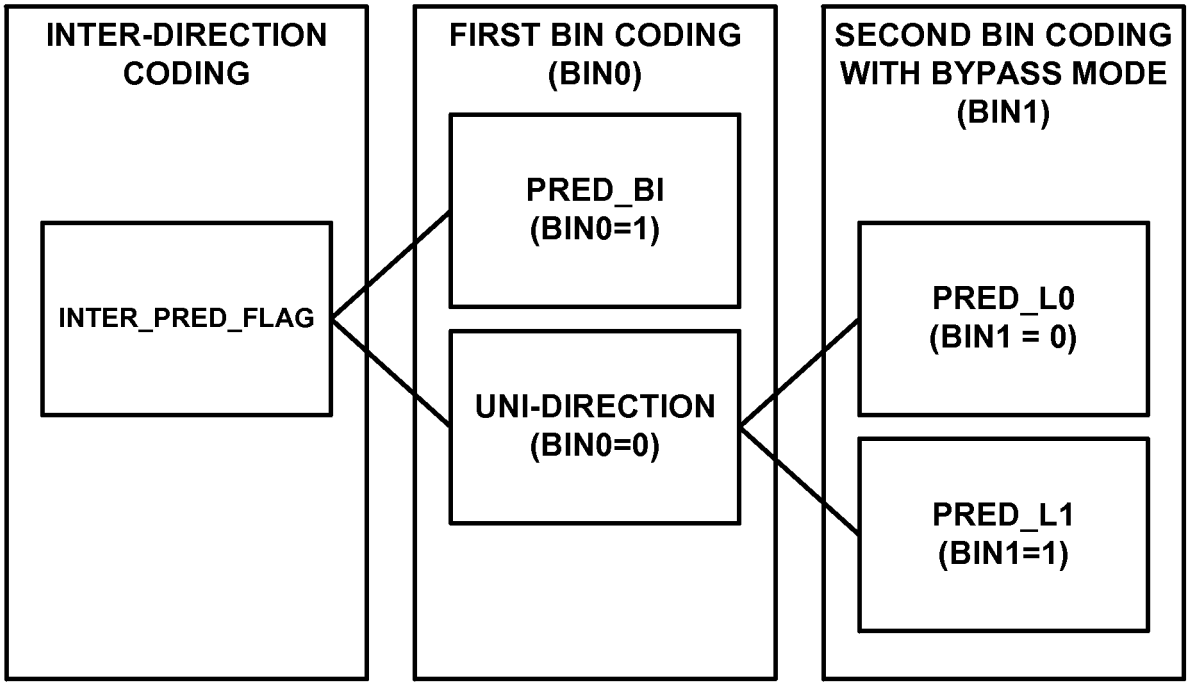
INTER-DIRECTION CODING
INTER_PRED_FLAG
FIRST BIN CODING (BIN0)
PRED_BI (BIN0=1)
UNI-DIRECTION (BIN0=0)
SECOND BIN CODING WITH BYPASS MODE (BIN1)
PRED_L0 (BIN1 = 0)
PRED_L1 (BIN1=1)

FIG. 8B

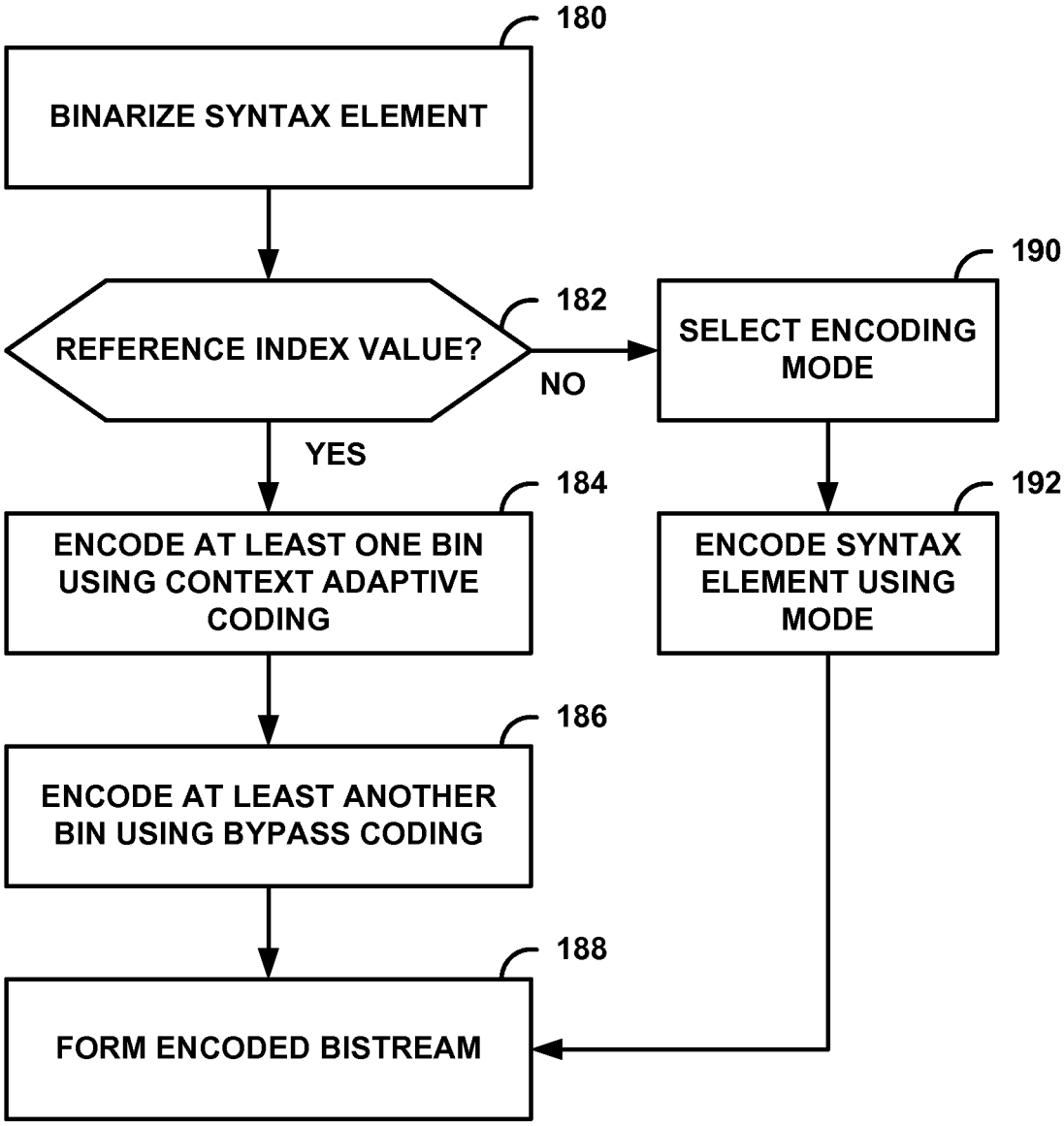
180
BINARIZE SYNTAX ELEMENT
182
REFERENCE INDEX VALUE?
NO
YES
190
SELECT ENCODING MODE
184
ENCODE AT LEAST ONE BIN USING CONTEXT ADAPTIVE CODING
192
ENCODE SYNTAX ELEMENT USING MODE
186
ENCODE AT LEAST ANOTHER BIN USING BYPASS CODING
188
FORM ENCODED BISTREAM

FIG. 9

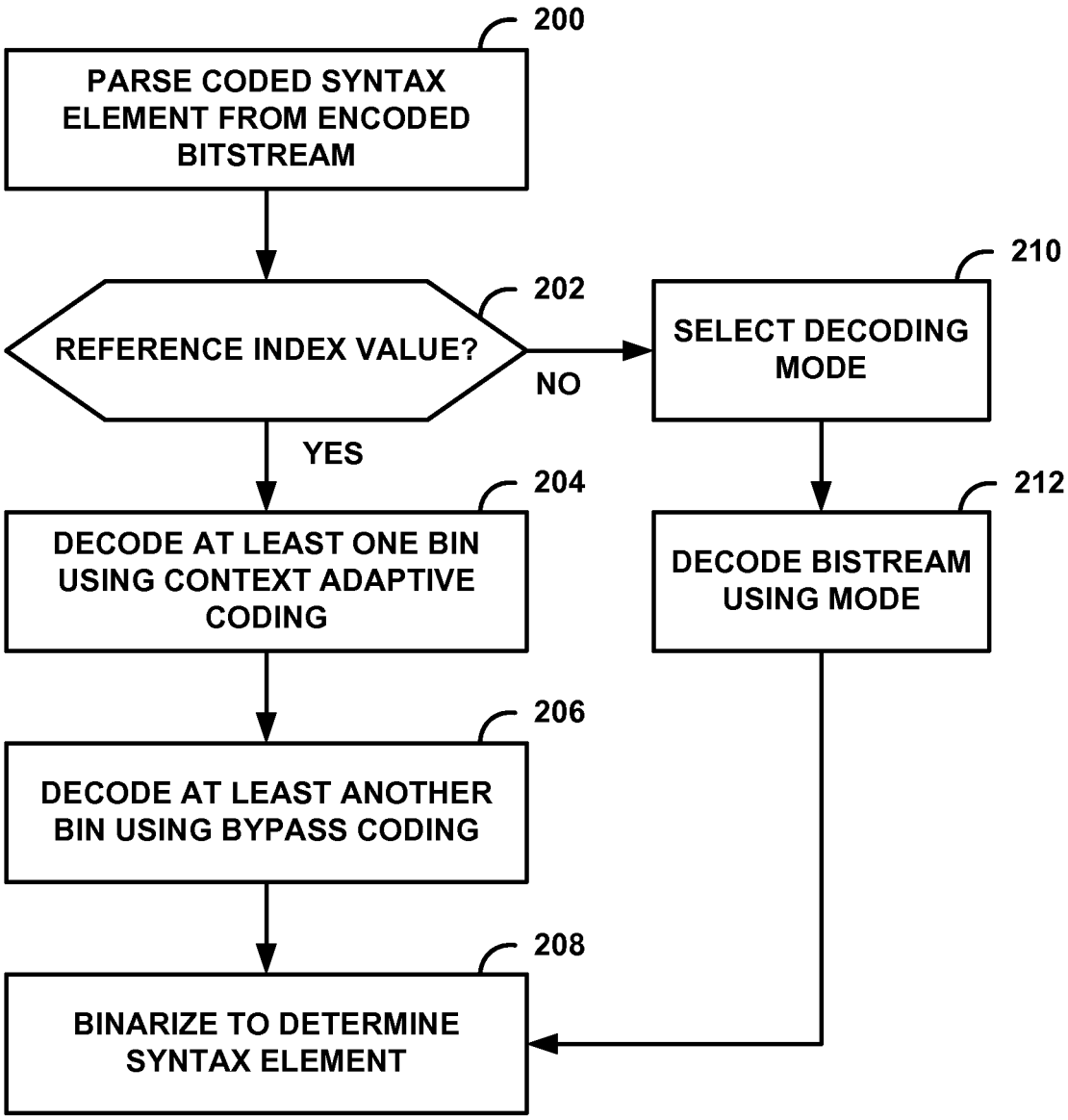
200
PARSE CODED SYNTAX ELEMENT FROM ENCODED BITSTREAM
202
REFERENCE INDEX VALUE?
NO
YES
210
SELECT DECODING MODE
204
DECODE AT LEAST ONE BIN USING CONTEXT ADAPTIVE CODING
212
DECODE BISTREAM USING MODE
206
DECODE AT LEAST ANOTHER BIN USING BYPASS CODING
208
BINARIZE TO DETERMINE SYNTAX ELEMENT

FIG. 10

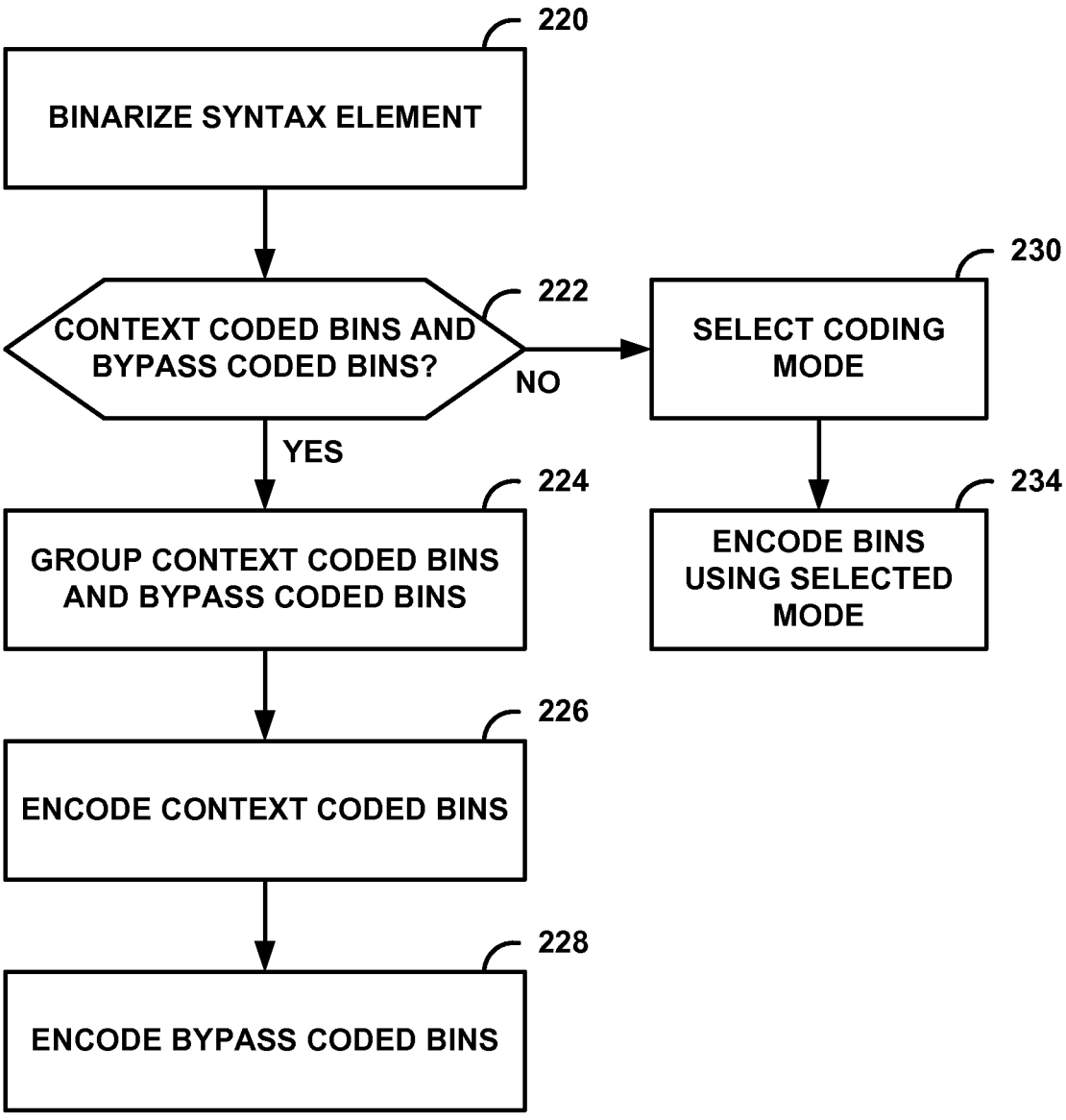
220
BINARIZE SYNTAX ELEMENT
222
CONTEXT CODED BINS AND BYPASS CODED BINS?
NO
YES
230
SELECT CODING MODE
224
GROUP CONTEXT CODED BINS AND BYPASS CODED BINS
234
ENCODE BINS USING SELECTED MODE
226
ENCODE CONTEXT CODED BINS
228
ENCODE BYPASS CODED BINS

FIG. 11

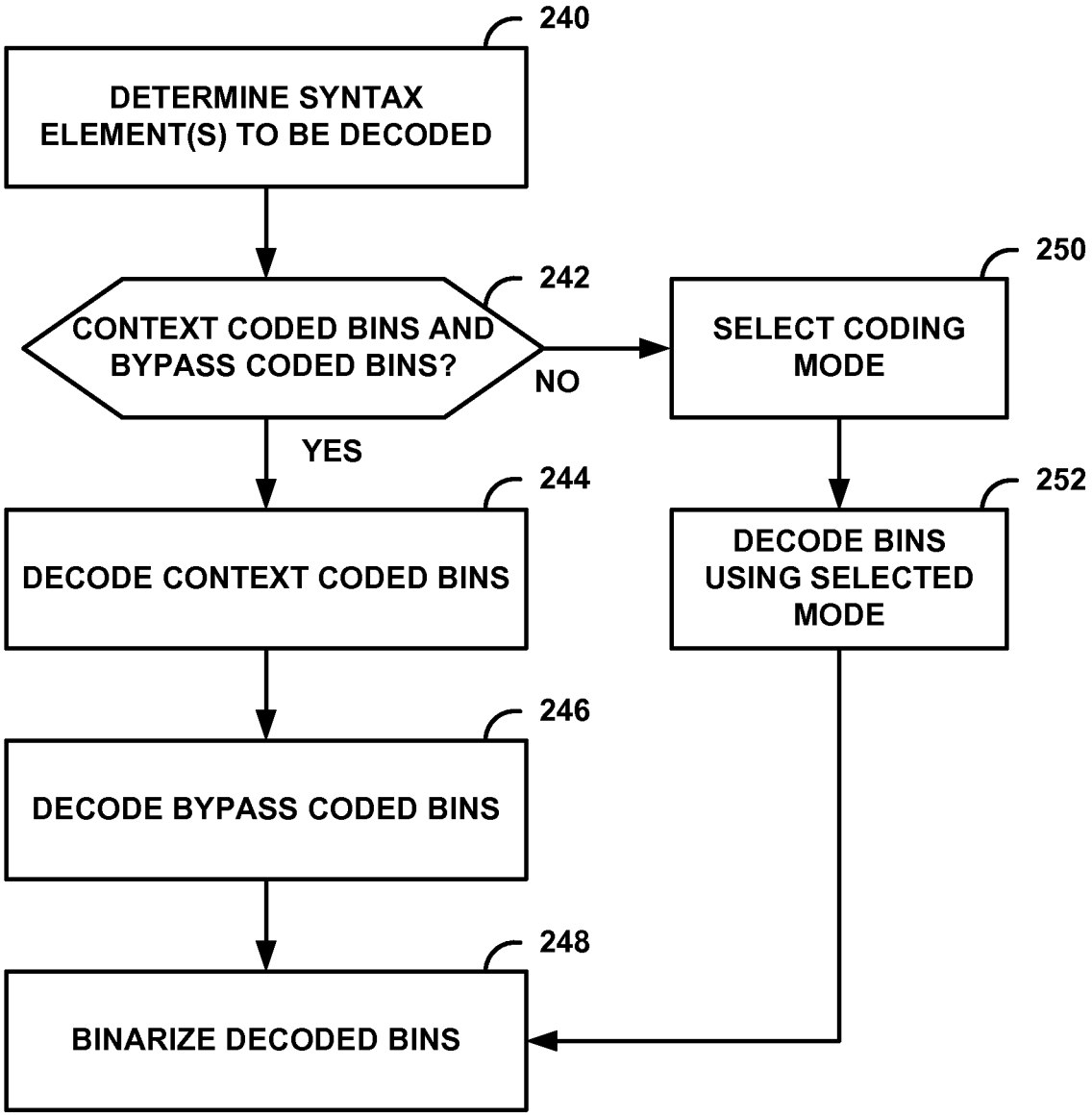
240
DETERMINE SYNTAX ELEMENT(S) TO BE DECODED
242
CONTEXT CODED BINS AND BYPASS CODED BINS?
NO
250
SELECT CODING MODE
YES
244
DECODE CONTEXT CODED BINS
252
DECODE BINS USING SELECTED MODE
246
DECODE BYPASS CODED BINS
248
BINARIZE DECODED BINS

FIG. 12