Fig.1

(a)

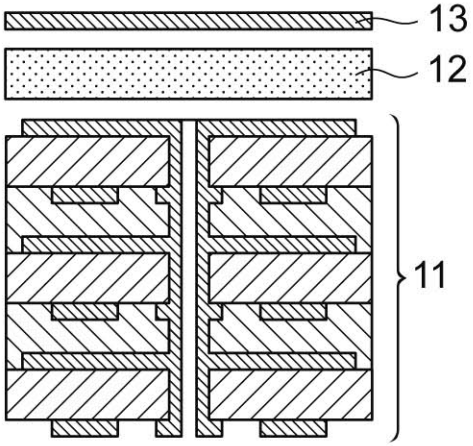

(b)

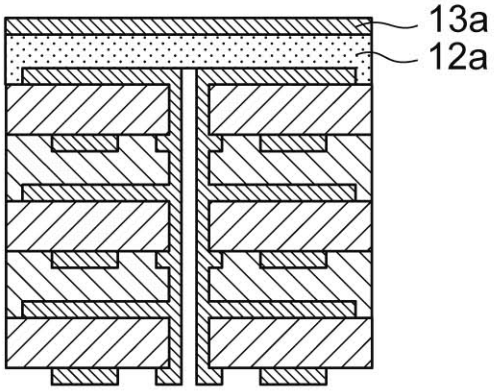

(c)

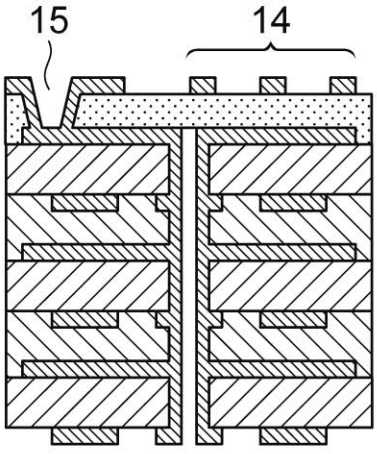

Fig.2

(p)

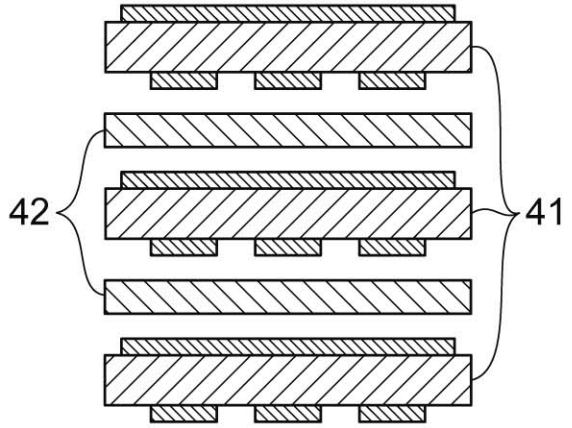

(q)

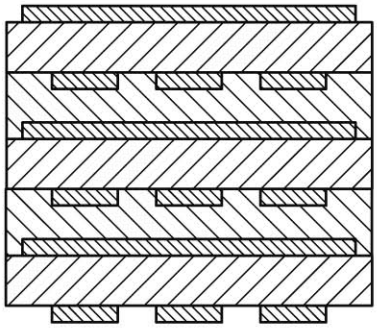

(r)

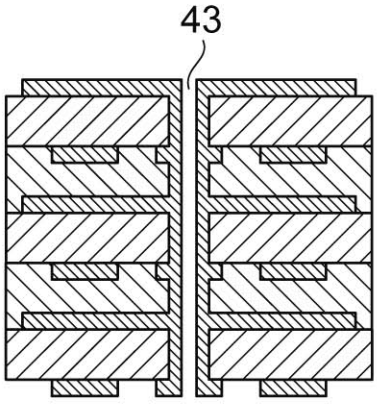

Fig.3

(a)

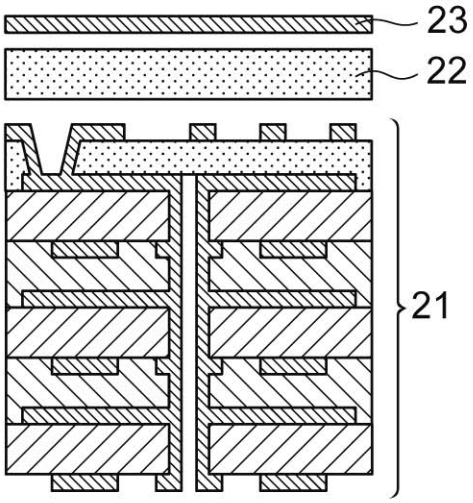

(b)

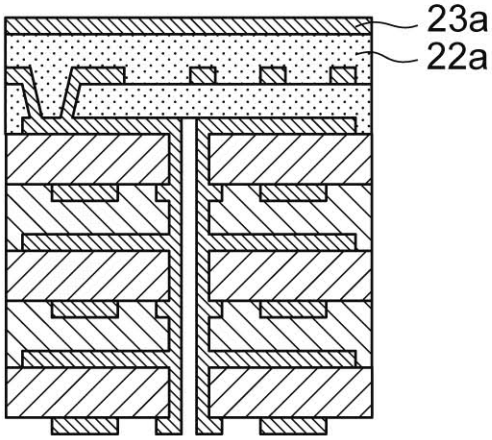

(c)

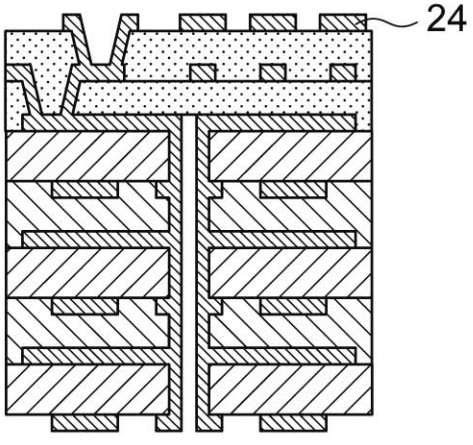

Fig.4

(a')

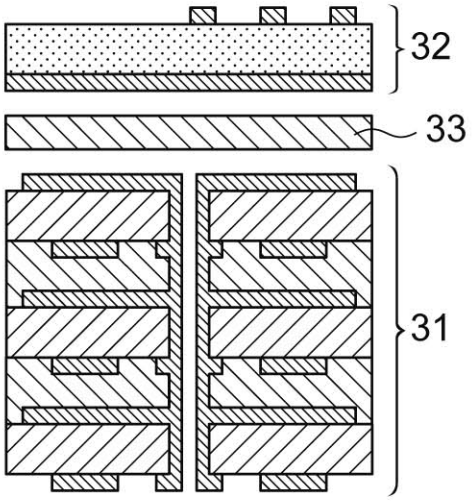

(c')

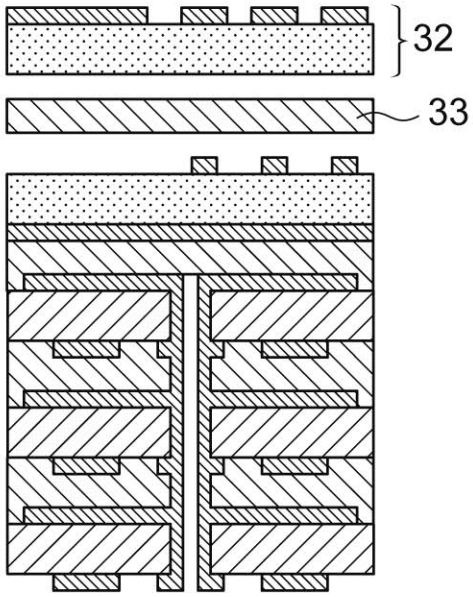

(b')

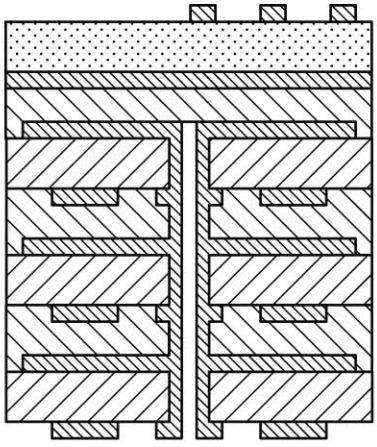

(d')

