(12) INTERNATIONAL APPLICATION PUBLISHED UNDER THE PATENT COOPERATION TREATY (PCT)

(19) World Intellectual Property Organization
International Bureau

(43) International Publication Date
21 February 2008 (21.02.2008)

PCT

(10) International Publication Number
WO 2008/021354 A1

(51) International Patent Classification:
E21B 10/25 (2006.01)

(21) International Application Number:
PCT/US2007/017975

(22) International Filing Date: 14 August 2007 (14.08.2007)

(25) Filing Language: English

(26) Publication Language: English

(30) Priority Data:

60/837,560	14 August 2006 (14.08.2006)	US
11/838,361	14 August 2007 (14.08.2007)	US

(71) Applicant *(for all designated States except US)*: **BAKER HUGHES INCORPORATED** [US/US]; P.O. Box 4740, Houston, TX 77210-4740 (US).

(72) Inventor; and
(75) Inventor/Applicant *(for US only)*: **DICK, Aaron, J.** [US/US]; 1210 Cortlandt Street, Houston, TX 77008 (US).

(74) Agents: **WELBORN, BRIAN, S.** et al.; Baker Hughes Incorporated, P.O. Box 4740, Houston, TX 77210-4740 (US).

(81) Designated States *(unless otherwise indicated, for every kind of national protection available)*: AE, AG, AL, AM, AT, AU, AZ, BA, BB, BG, BH, BR, BW, BY, BZ, CA, CH, CN, CO, CR, CU, CZ, DE, DK, DM, DO, DZ, EC, EE, EG, ES, FI, GB, GD, GE, GH, GM, GT, HN, HR, HU, ID, IL, IN, IS, JP, KE, KG, KM, KN, KP, KR, KZ, LA, LC, LK, LR, LS, LT, LU, LY, MA, MD, ME, MG, MK, MN, MW, MX, MY, MZ, NA, NG, NI, NO, NZ, OM, PG, PH, PL, PT, RO, RS, RU, SC, SD, SE, SG, SK, SL, SM, SV, SY, TJ, TM, TN, TR, TT, TZ, UA, UG, US, UZ, VC, VN, ZA, ZM, ZW.

(84) Designated States *(unless otherwise indicated, for every kind of regional protection available)*: ARIPO (BW, GH, GM, KE, LS, MW, MZ, NA, SD, SL, SZ, TZ, UG, ZM, ZW), Eurasian (AM, AZ, BY, KG, KZ, MD, RU, TJ, TM), European (AT, BE, BG, CH, CY, CZ, DE, DK, EE, ES, FI, FR, GB, GR, HU, IE, IS, IT, LT, LU, LV, MC, MT, NL, PL, PT, RO, SE, SI, SK, TR), OAPI (BF, BJ, CF, CG, CI, CM, GA, GN, GQ, GW, ML, MR, NE, SN, TD, TG).

Declarations under Rule 4.17:
— *as to applicant's entitlement to apply for and be granted a patent (Rule 4.17(ii))*
— *as to the applicant's entitlement to claim the priority of the earlier application (Rule 4.17(iii))*

Published:
— *with international search report*
— *before the expiration of the time limit for amending the claims and to be republished in the event of receipt of amendments*

(54) Title: STABILIZED SEAL FOR ROCK BITS

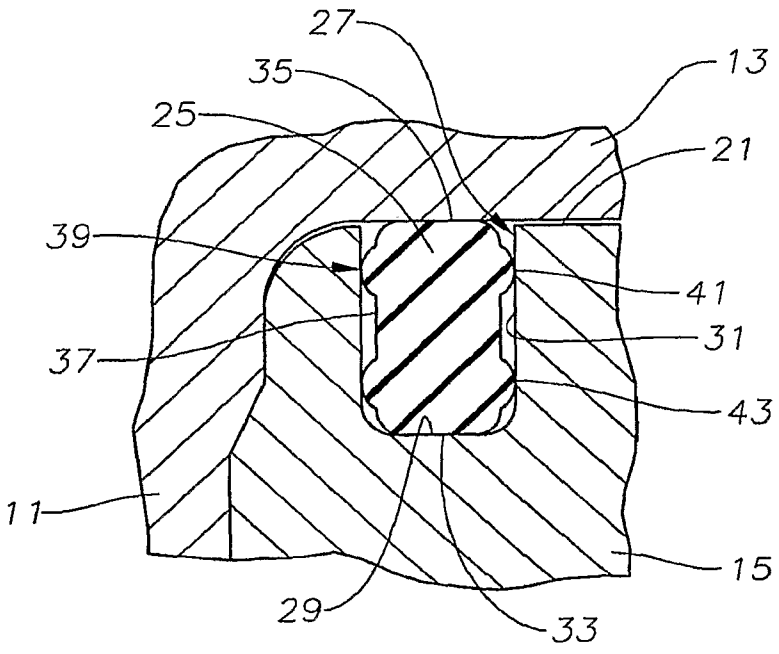

(57) Abstract: An earth boring bit has a bit body having a depending bearing pin. A cone has a cavity rotatably mounted on the bearing pin. A seal groove formed in the cavity of the cone. An elastomeric seal ring is located within the groove and forms a seal between a base of the groove and the bearing pin. The seal ring has two side surfaces, each spaced from one of the side walls of the groove by a clearance. Elastomeric protuberances protrude from each of the side surfaces of the seal ring for non-sealing contact with one of the side walls of the groove.

WO 2008/021354 A1