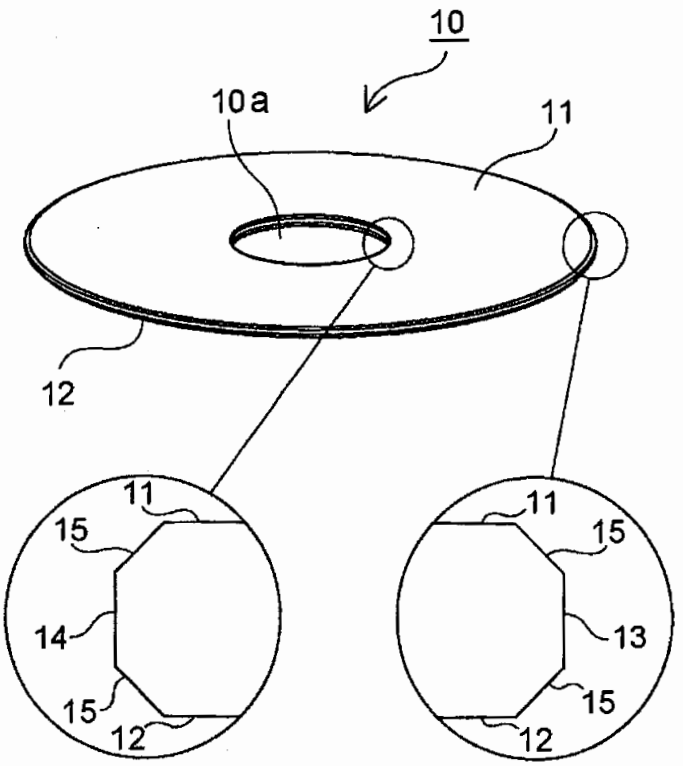

FIG. 1

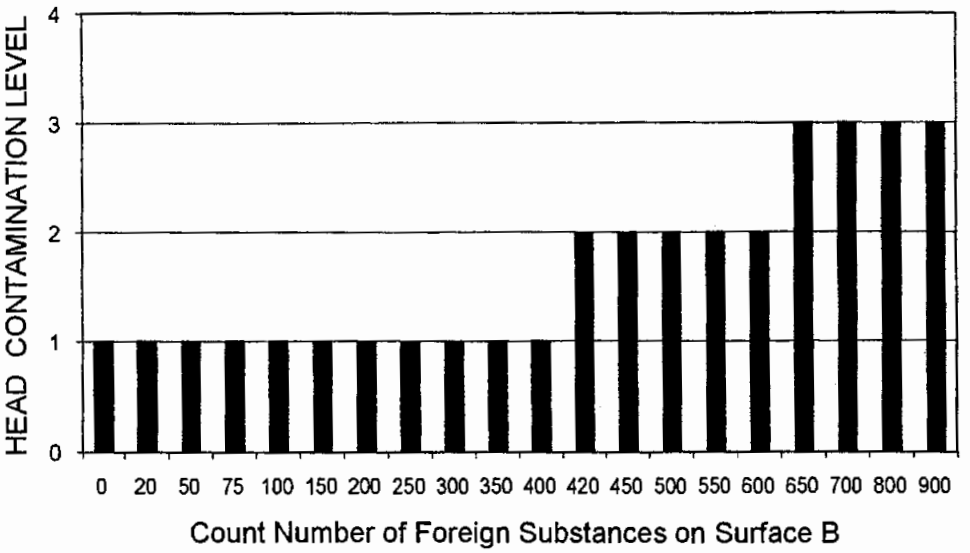
HEAD CONTAMINATION LEVEL
4
3
2
1
0
0 20 50 75 100 150 200 250 300 350 400 420 450 500 550 600 650 700 800 900
Count Number of Foreign Substances on Surface B

FIG. 2

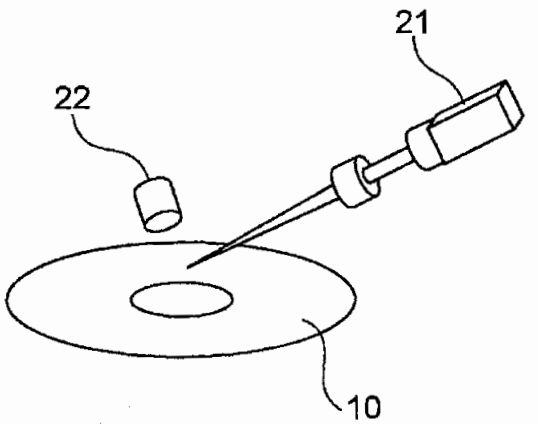
21
22
10

FIG. 3