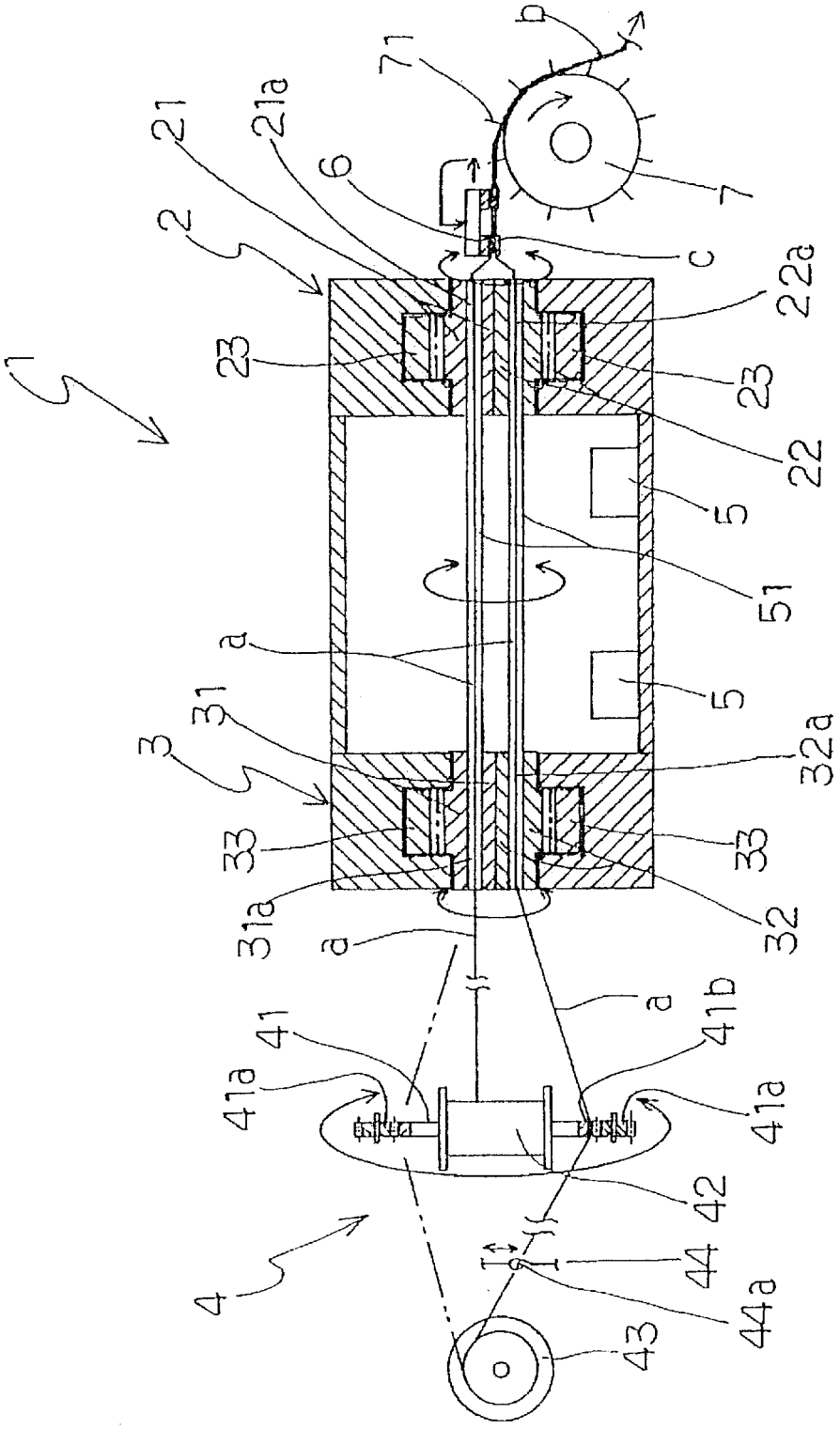
1
2
21
21a
6
71
b
7
c
22a
23
23
22
5
51
5
a
31
3
32a
33
33
31a
32
a
a
41
41b
41a
41a
42
4
44
44a
43

FIG. 1

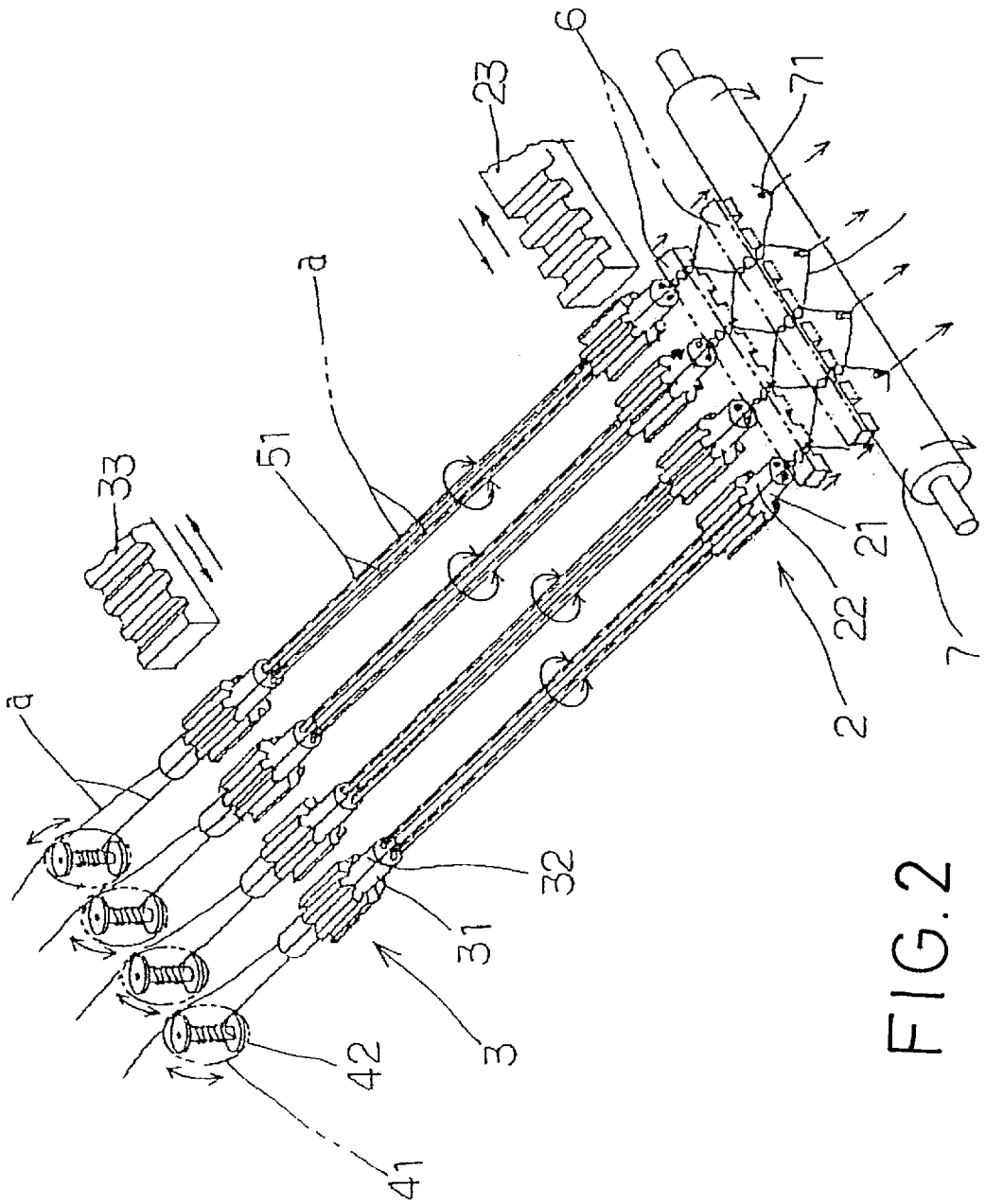

FIG. 2

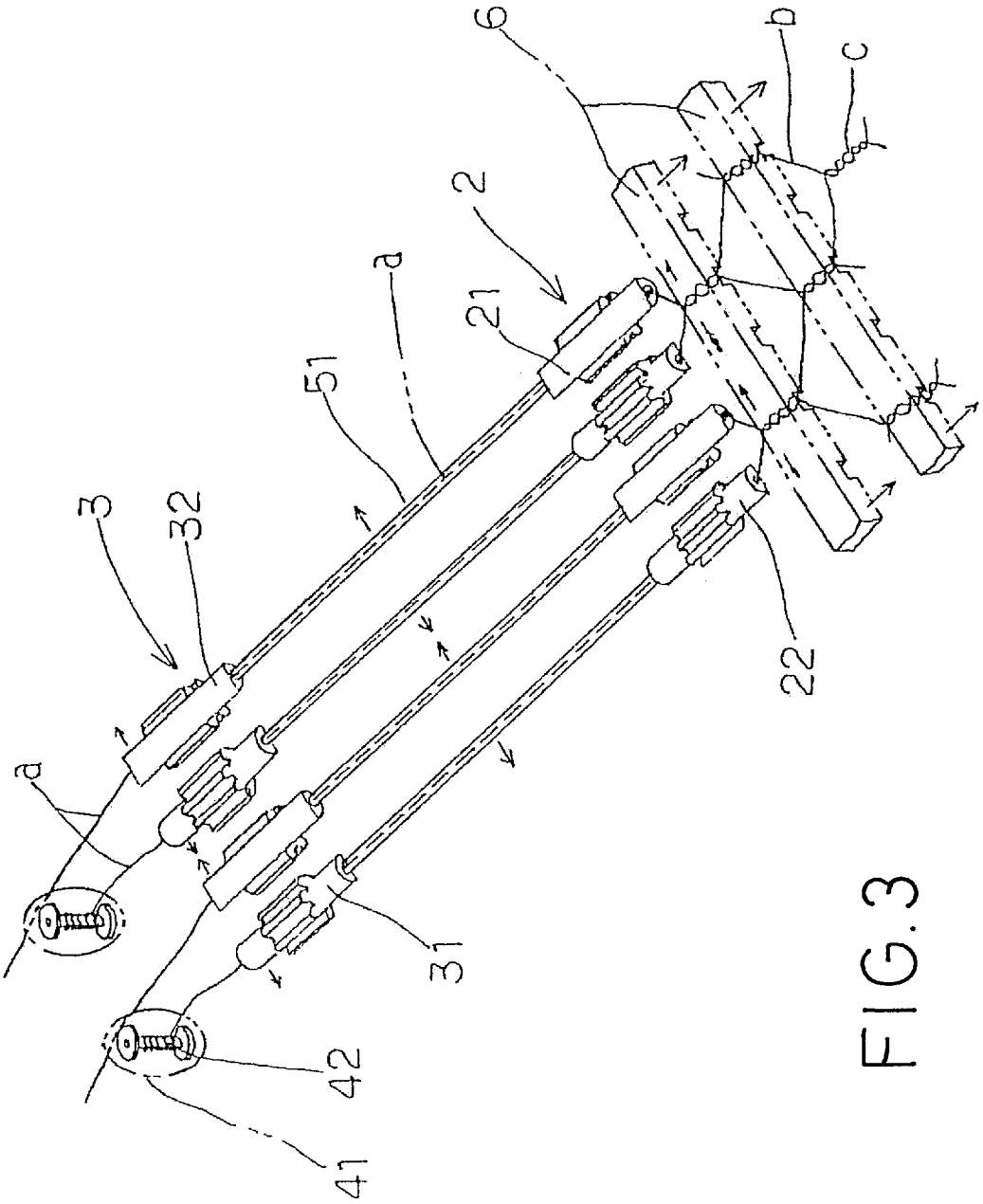

FIG.3

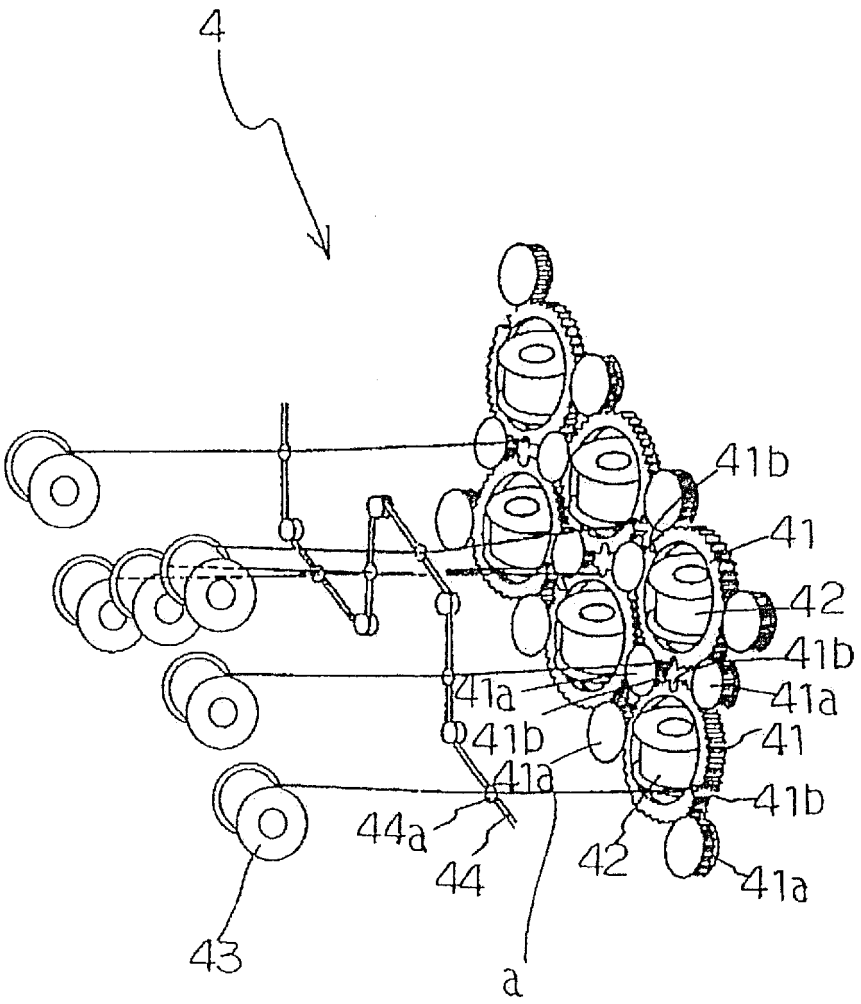

FIG. 4

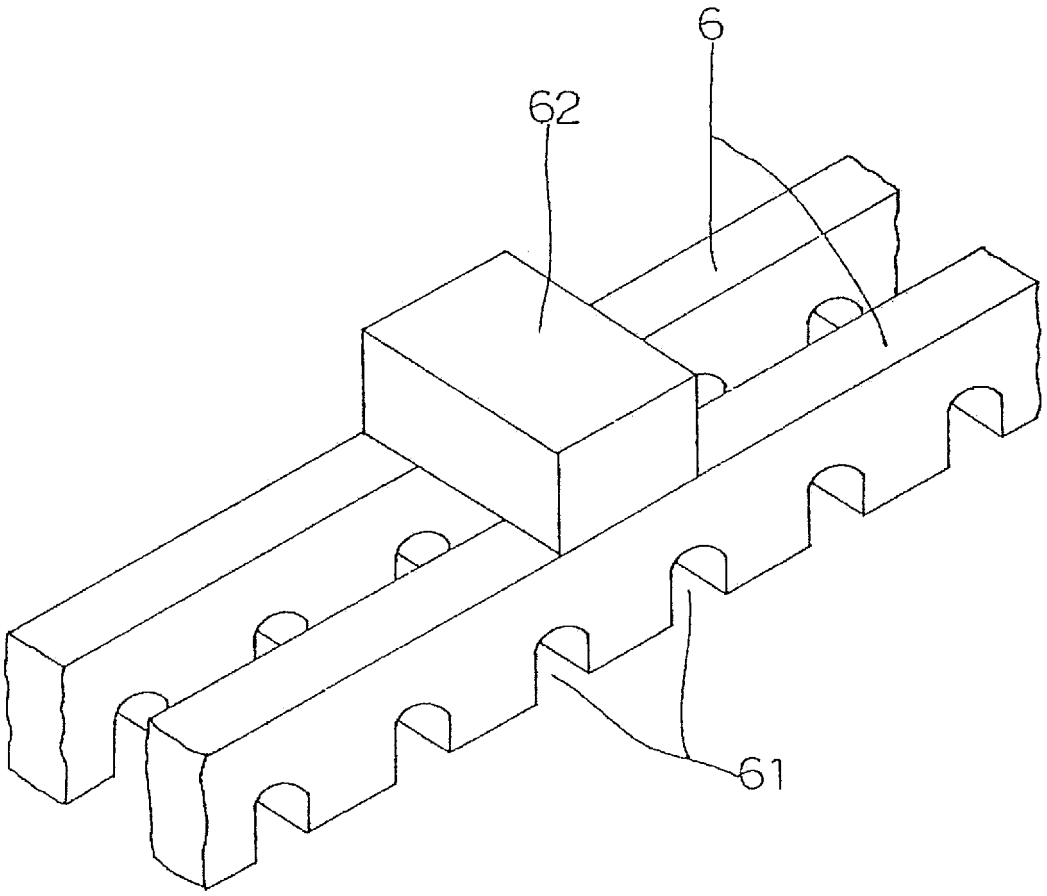

FIG.5

FIG.6A

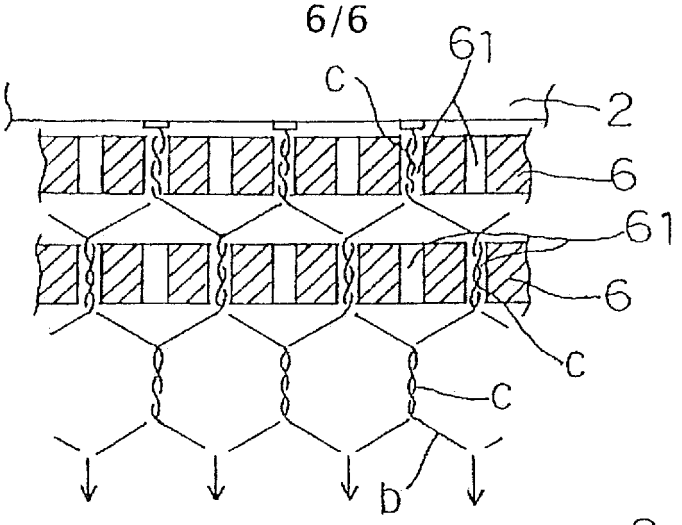

FIG.6B

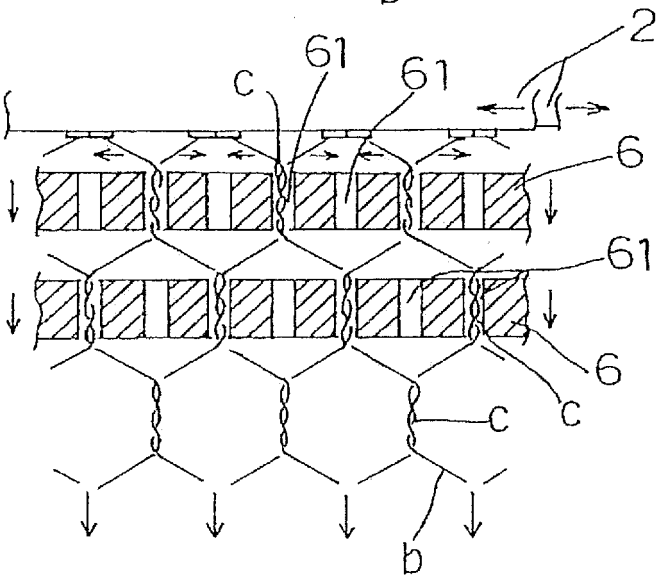

FIG.6C

