(12) INTERNATIONAL APPLICATION PUBLISHED UNDER THE PATENT COOPERATION TREATY (PCT)

(19) World Intellectual Property Organization
International Bureau

(43) International Publication Date
30 April 2009 (30.04.2009)

PCT

(10) International Publication Number
WO 2009/054821 A2

(51) International Patent Classification:
G10H 1/32 (2006.01) *G10H 7/00* (2006.01)

(21) International Application Number:
PCT/TT2007/000002

(22) International Filing Date: 26 October 2007 (26.10.2007)

(25) Filing Language: English

(26) Publication Language: English

(71) Applicants and
(72) Inventors: **COPELAND, Brian R.** [TT/TT]; No. 14 Birchwood Boulevard, Cocoyea Village, San Fernando, West Indies (TT). **BYRON, Marcel** [TT/TT]; No. 12 Malabar Gardens, Tunapuna, West Indies (TT). **PHILIP, Earle** [TT/TT]; No. 15 Dahalia Road, Macoya Gardens, Tunapuna, West Indies (TT). **MAYNARD, Keith** [TT/TT]; No. 2A Roberts Street, Woodbrook, Port Of Spain, West Indies (TT).

(74) Agent: **MESSRS. EVERARD N. BYER & CO.**; No. 60-62 Frederick Street, Port Of Spain (TT).

(81) Designated States *(unless otherwise indicated, for every kind of national protection available)*: AE, AG, AL, AM, AT, AU, AZ, BA, BB, BG, BH, BR, BW, BY, BZ, CA, CH, CN, CO, CR, CU, CZ, DE, DK, DM, DO, DZ, EC, EE, EG, ES, FI, GB, GD, GE, GH, GM, GT, HN, HR, HU, ID, IL, IN, IS, JP, KE, KG, KM, KN, KP, KR, KZ, LA, LC, LK, LR, LS, LT, LU, LY, MA, MD, ME, MG, MK, MN, MW, MX, MY, MZ, NA, NG, NI, NO, NZ, OM, PG, PH, PL, PT, RO, RS, RU, SC, SD, SE, SG, SK, SL, SM, SV, SY, TJ, TM, TN, TR, TT, TZ, UA, UG, US, UZ, VC, VN, ZA, ZM, ZW.

(84) Designated States *(unless otherwise indicated, for every kind of regional protection available)*: ARIPO (BW, GH, GM, KE, LS, MW, MZ, NA, SD, SL, SZ, TZ, UG, ZM, ZW), Eurasian (AM, AZ, BY, KG, KZ, MD, RU, TJ, TM), European (AT, BE, BG, CH, CY, CZ, DE, DK, EE, ES, FI, FR, GB, GR, HU, IE, IS, IT, LT, LU, LV, MC, MT, NL, PL, PT, RO, SE, SI, SK, TR), OAPI (BF, BJ, CF, CG, CI, CM, GA, GN, GQ, GW, ML, MR, NE, SN, TD, TG).

[Continued on next page]

(54) Title: AN APPARATUS FOR PERCUSSIVE HARMONIC MUSICAL SYNTHESIS UTILIZING MIDI TECHNOLOGY (APHAMS)

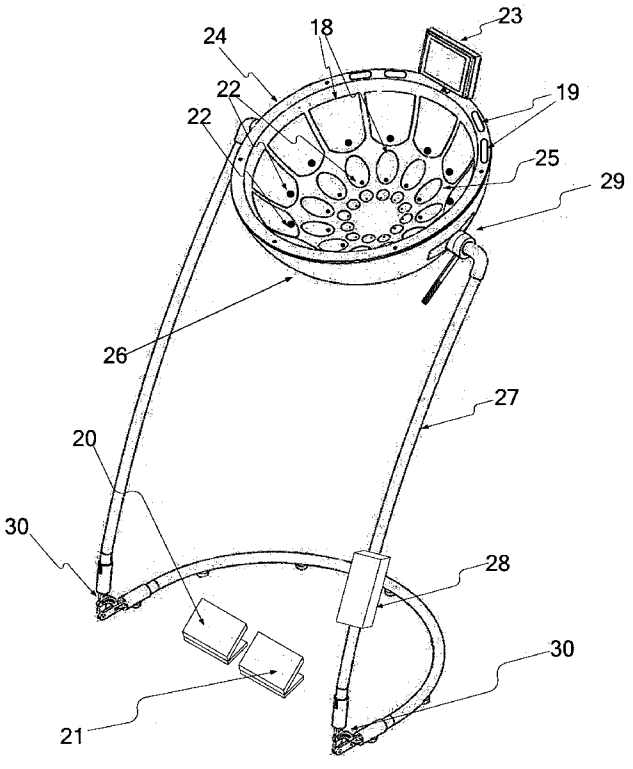

Fig. 2

(57) Abstract: An Apparatus for Percussive Harmonic Musical Synthesis (APHAMS) which facilitates state-of-the-art musical expression, through generation of melodic sound, bearing well defined tone and note pitch, by the striking of uniquely configured multiple note activation trigger mechanism surfaces, termed muzi-pads, with an appropriately sized mallet. stick, or other such similar playing implement, for the generation of a desired note, by a given MIDI device and which provides an enhanced emulation of the traditional tenor steelpan, in its interface with the player.

WO 2009/054821 A2

Declaration under Rule 4.17:
— *of inventorship (Rule 4.17(iv))*

Published:
— *without international search report and to be republished upon receipt of that report*