Fig. 1

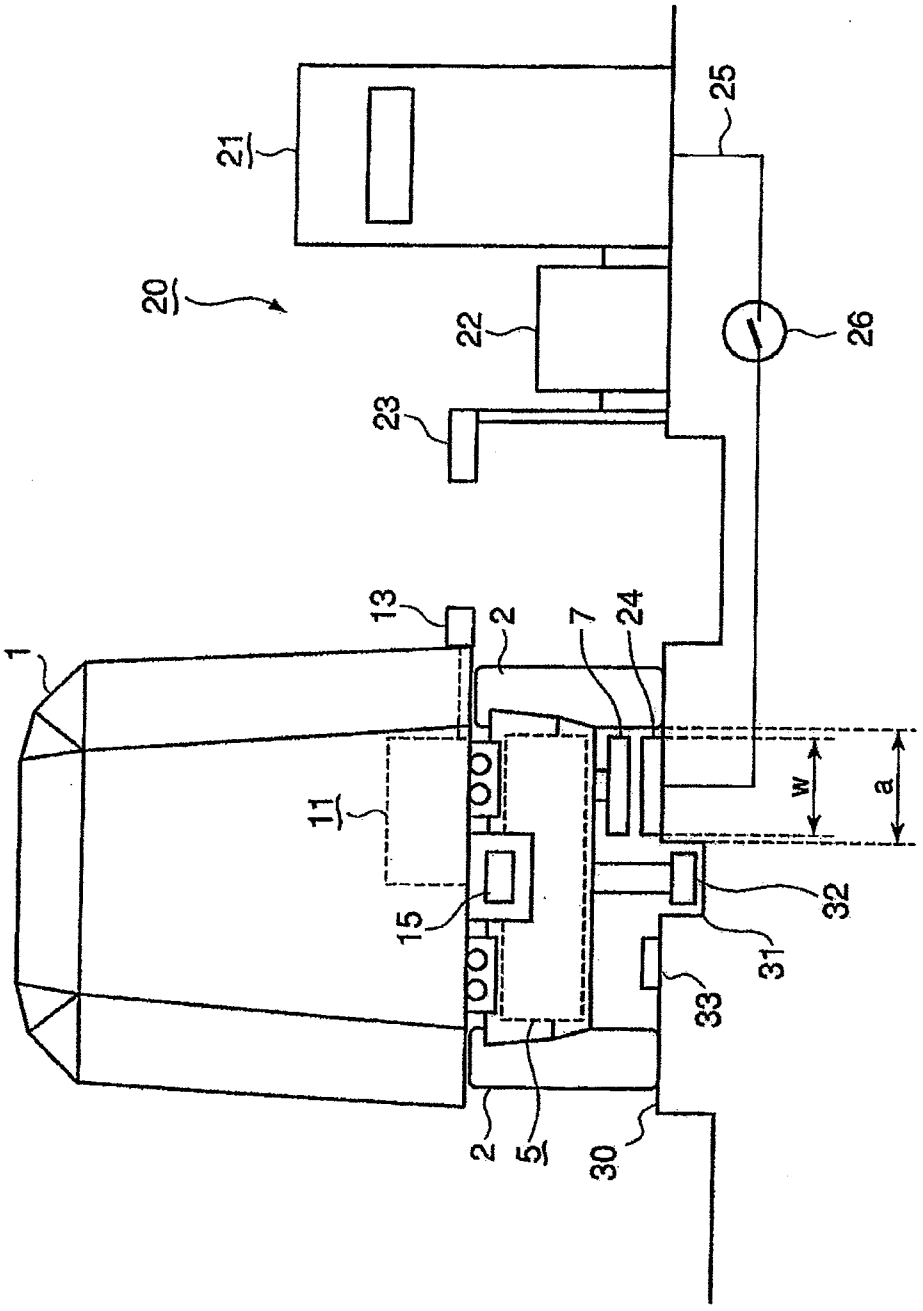

Fig. 2

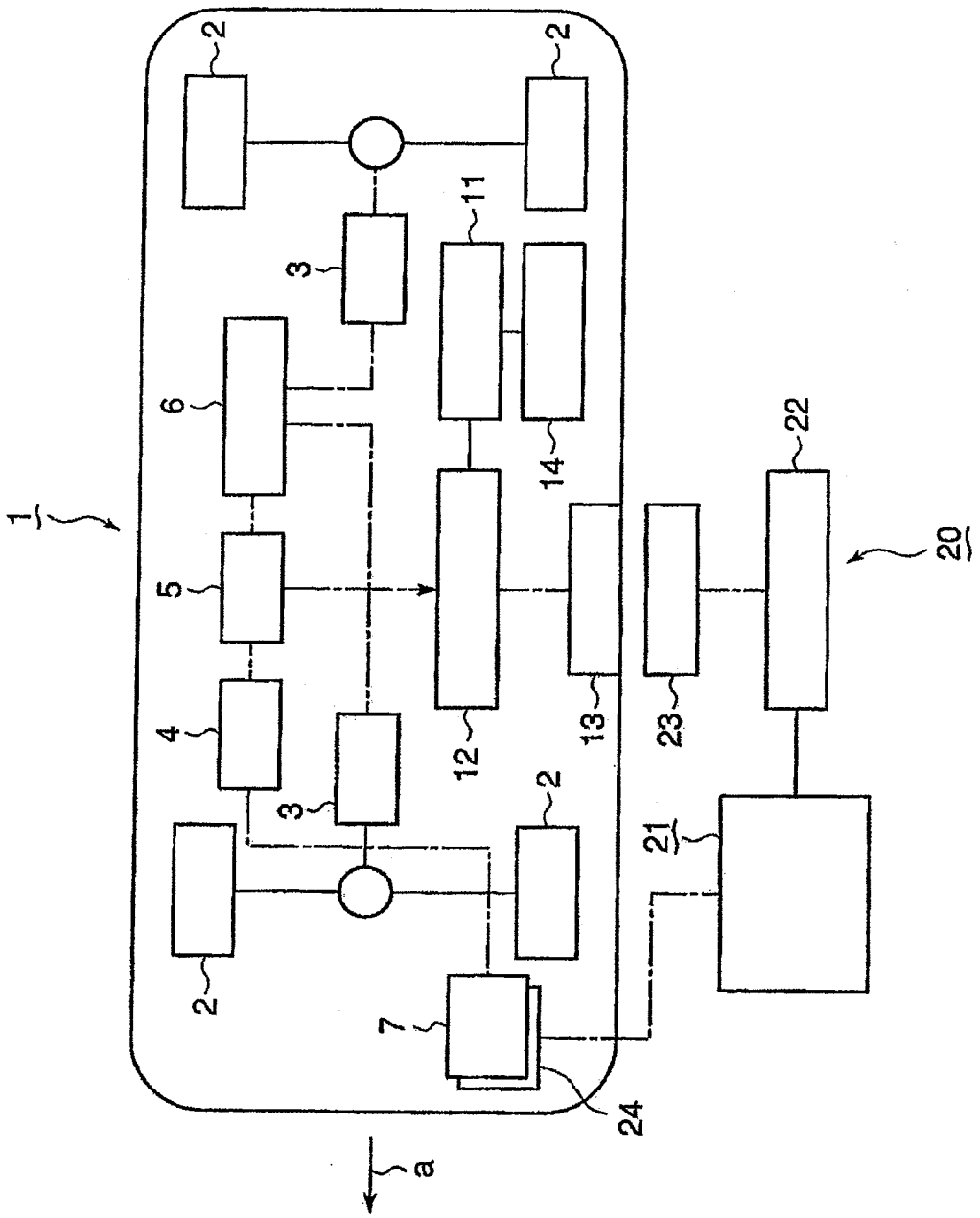

Fig.3

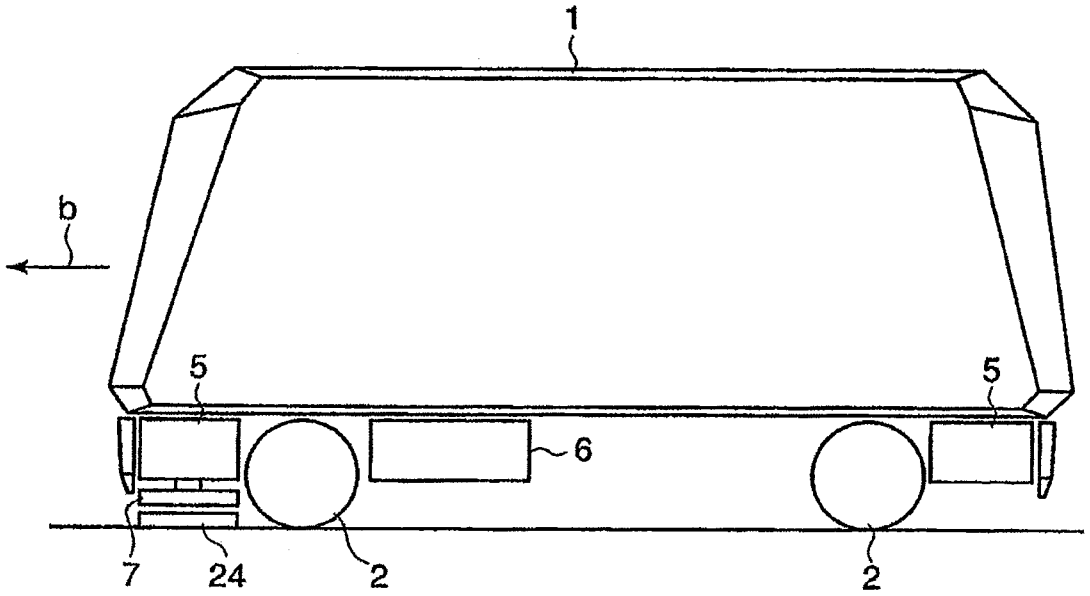

Fig.4

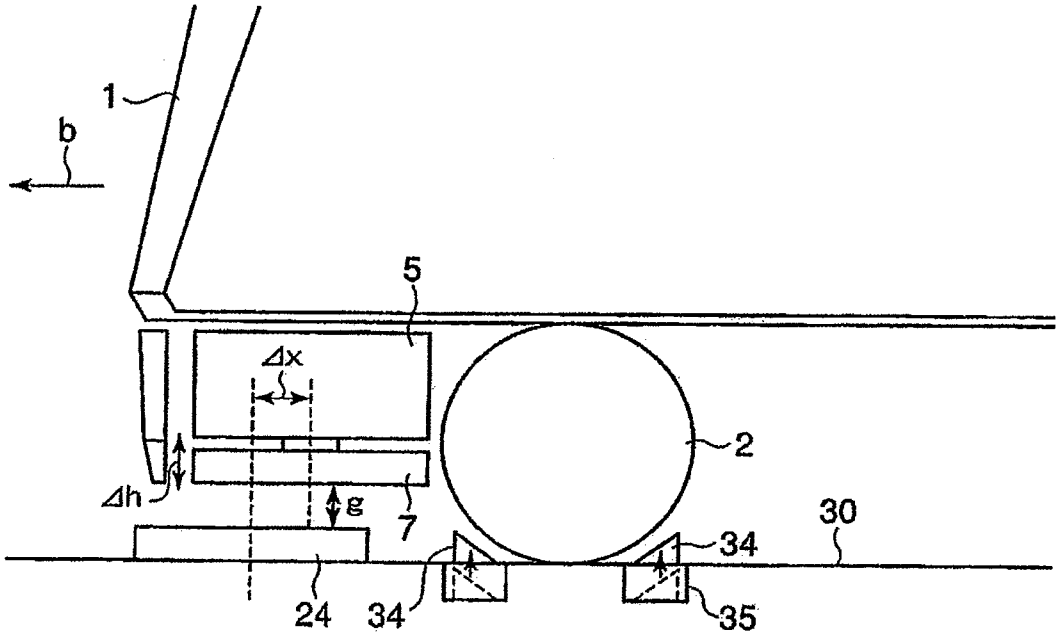

Fig. 5

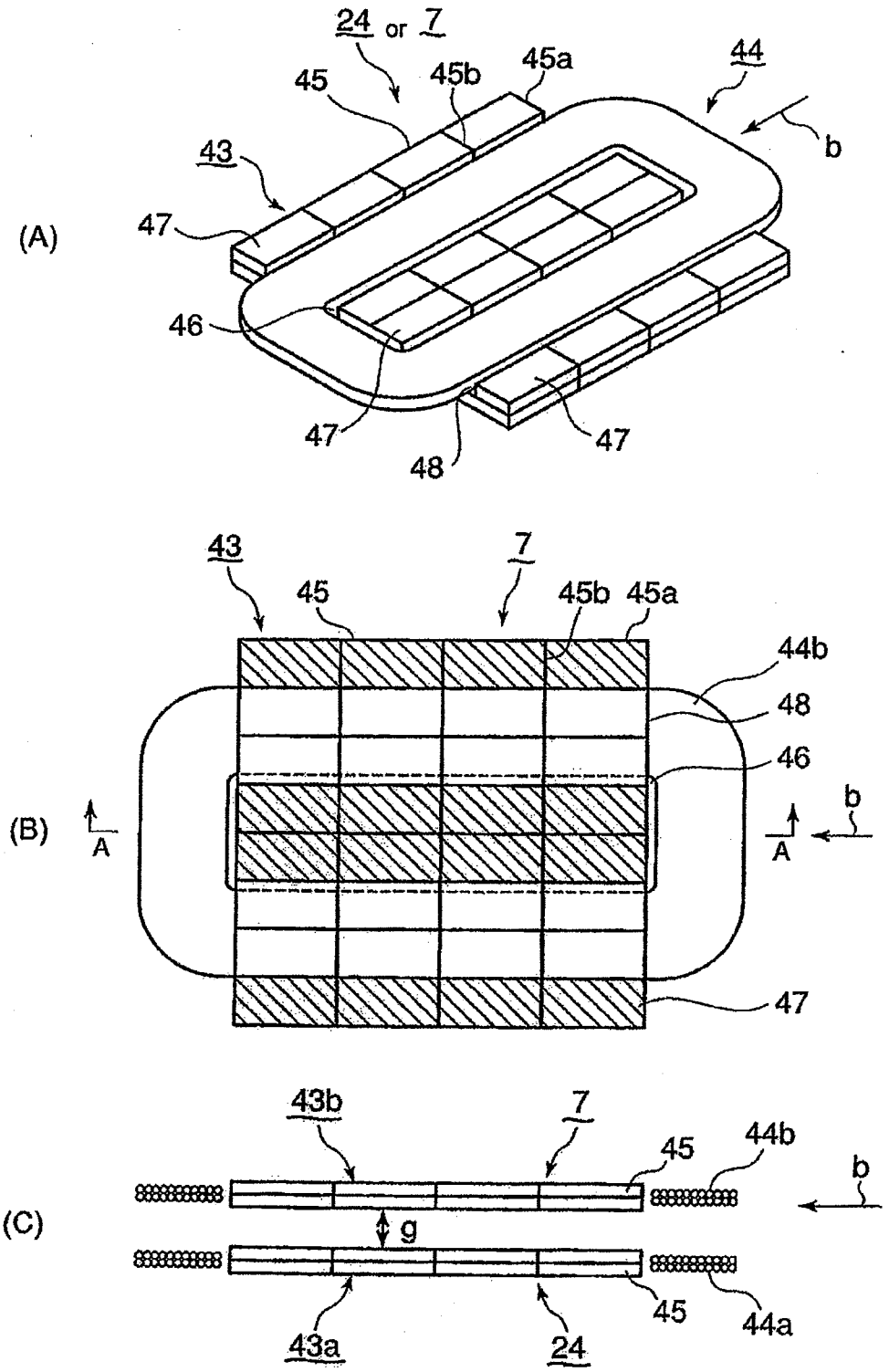

Sectional view along line A - A

Fig. 6

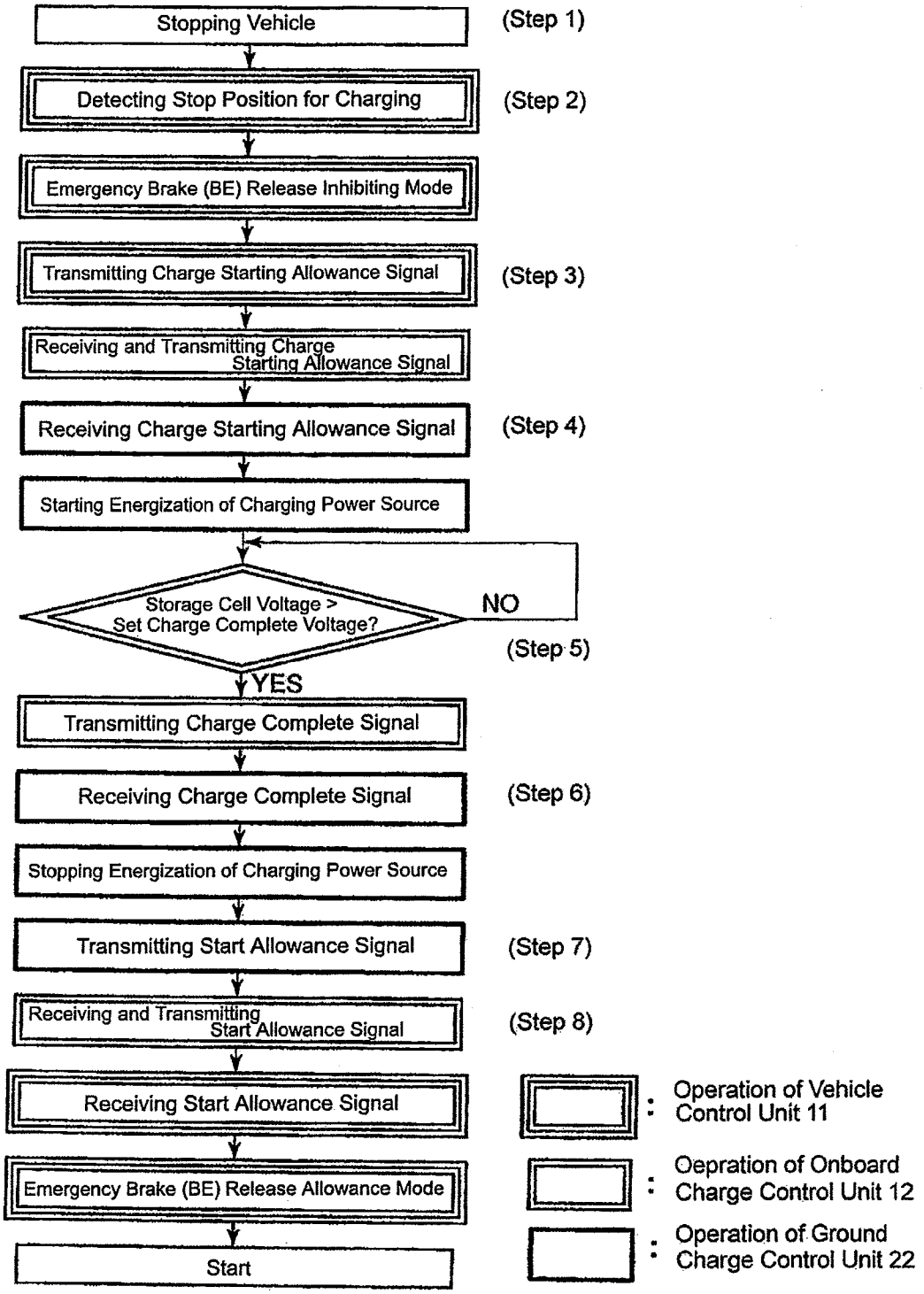
Stopping Vehicle
(Step 1)
Detecting Stop Position for Charging
(Step 2)
Emergency Brake (BE) Release Inhibiting Mode
Transmitting Charge Starting Allowance Signal
(Step 3)
Receiving and Transmitting Charge Starting Allowance Signal
Receiving Charge Starting Allowance Signal
(Step 4)
Starting Energization of Charging Power Source
Storage Cell Voltage > Set Charge Complete Voltage?
NO
(Step 5)
YES
Transmitting Charge Complete Signal
Receiving Charge Complete Signal
(Step 6)
Stopping Energization of Charging Power Source
Transmitting Start Allowance Signal
(Step 7)
Receiving and Transmitting Start Allowance Signal
(Step 8)
Receiving Start Allowance Signal
Emergency Brake (BE) Release Allowance Mode
Start
: Operation of Vehicle Control Unit 11
: Oepration of Onboard Charge Control Unit 12
: Operation of Ground Charge Control Unit 22

Fig. 7

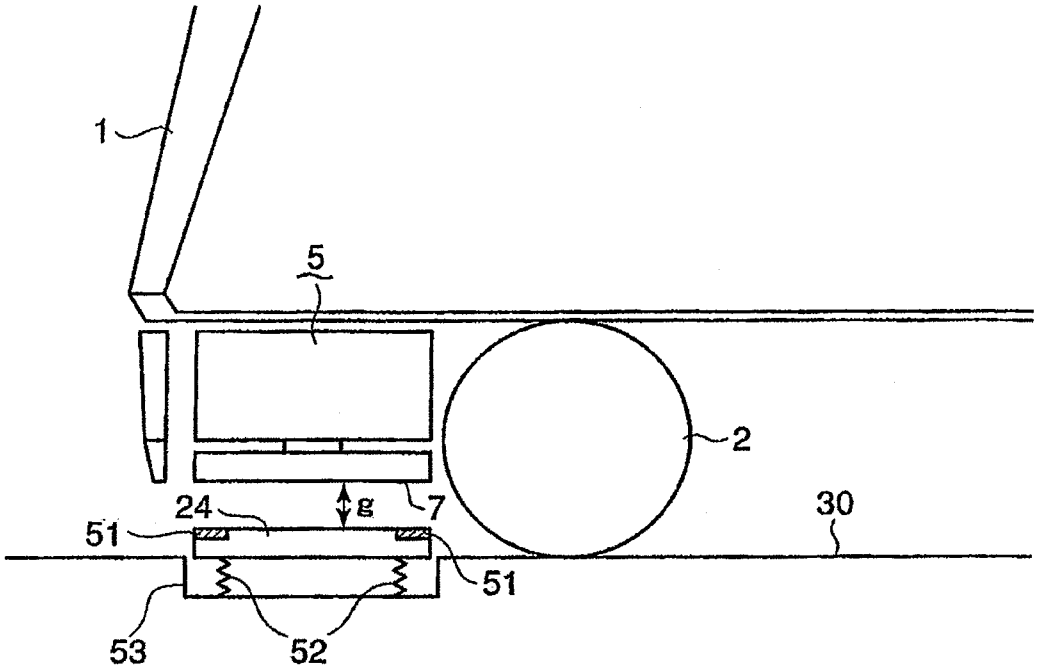

Fig. 8

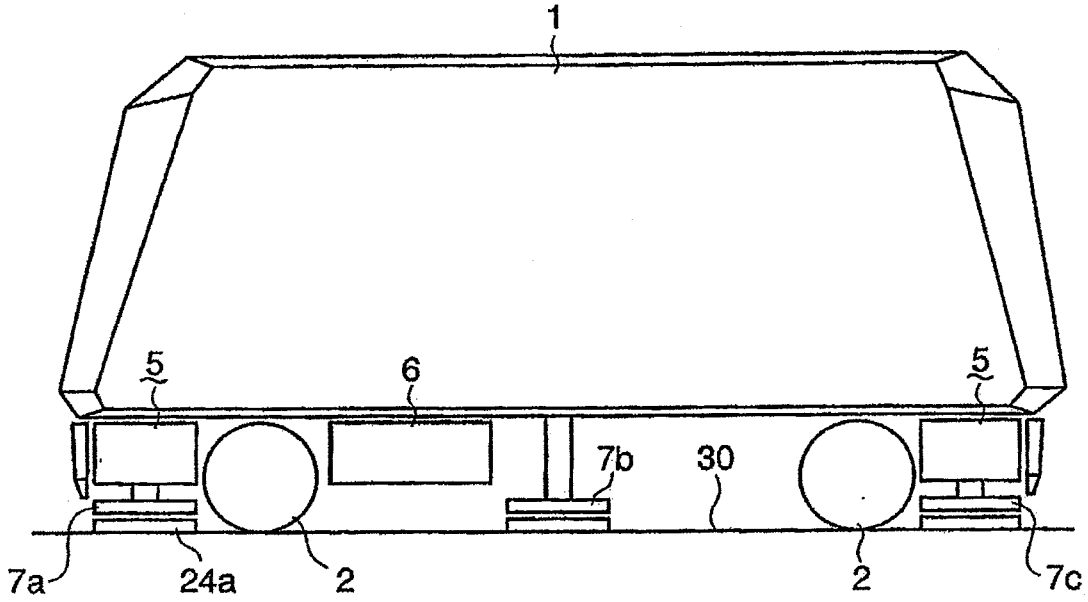

Fig. 9

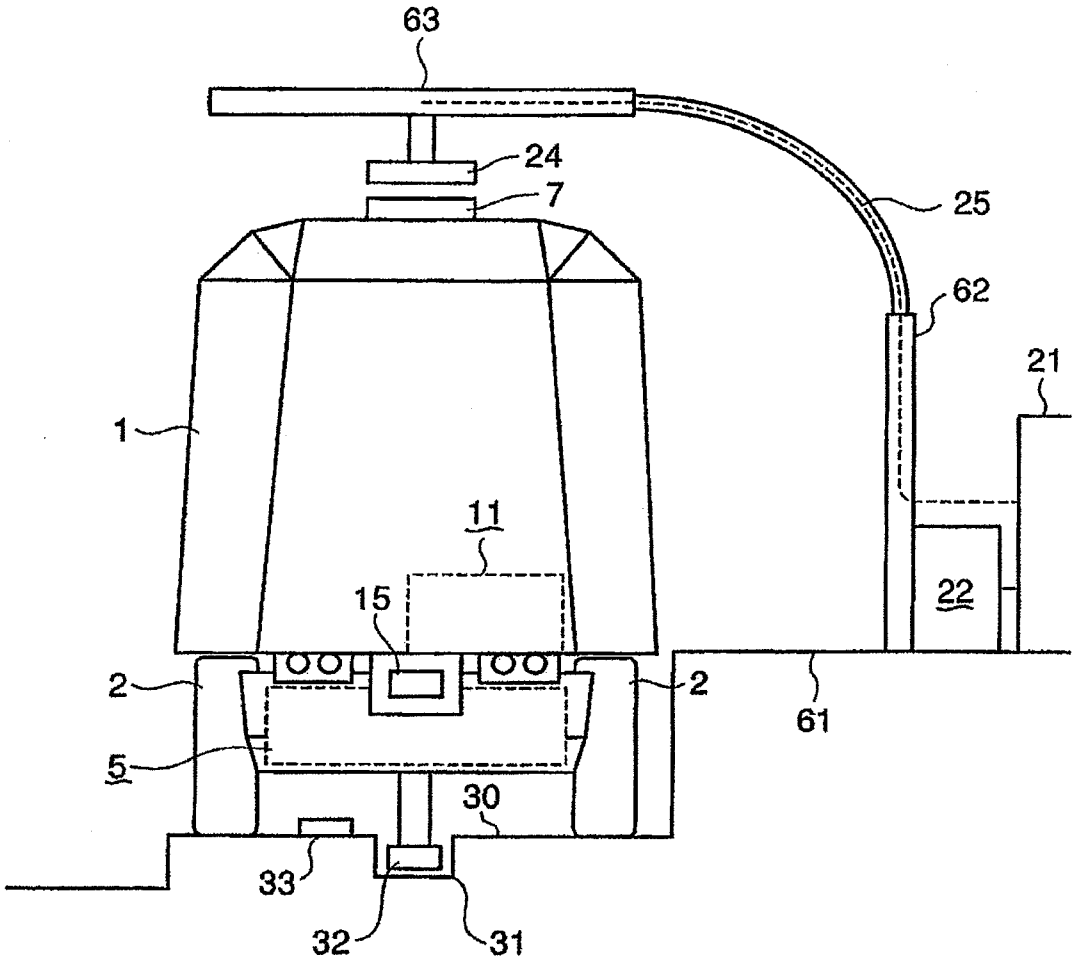

Fig.10

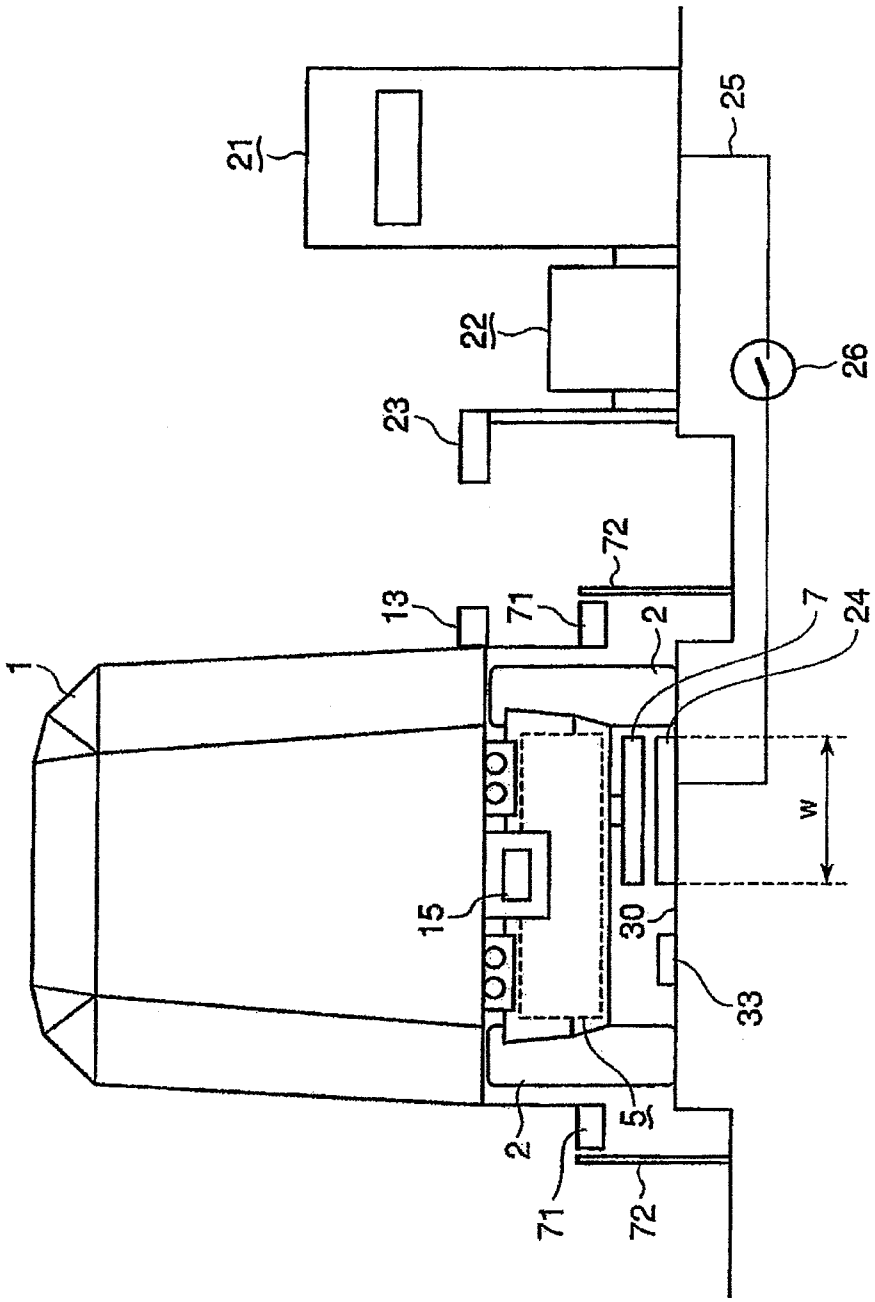

Fig.11

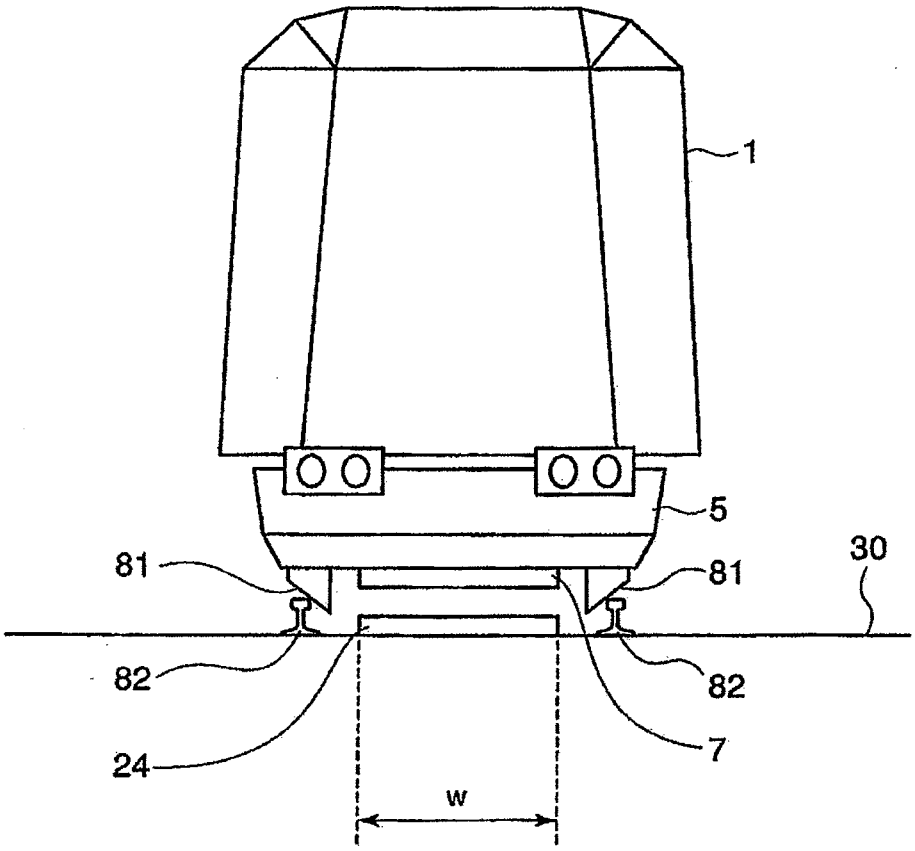

Fig.12

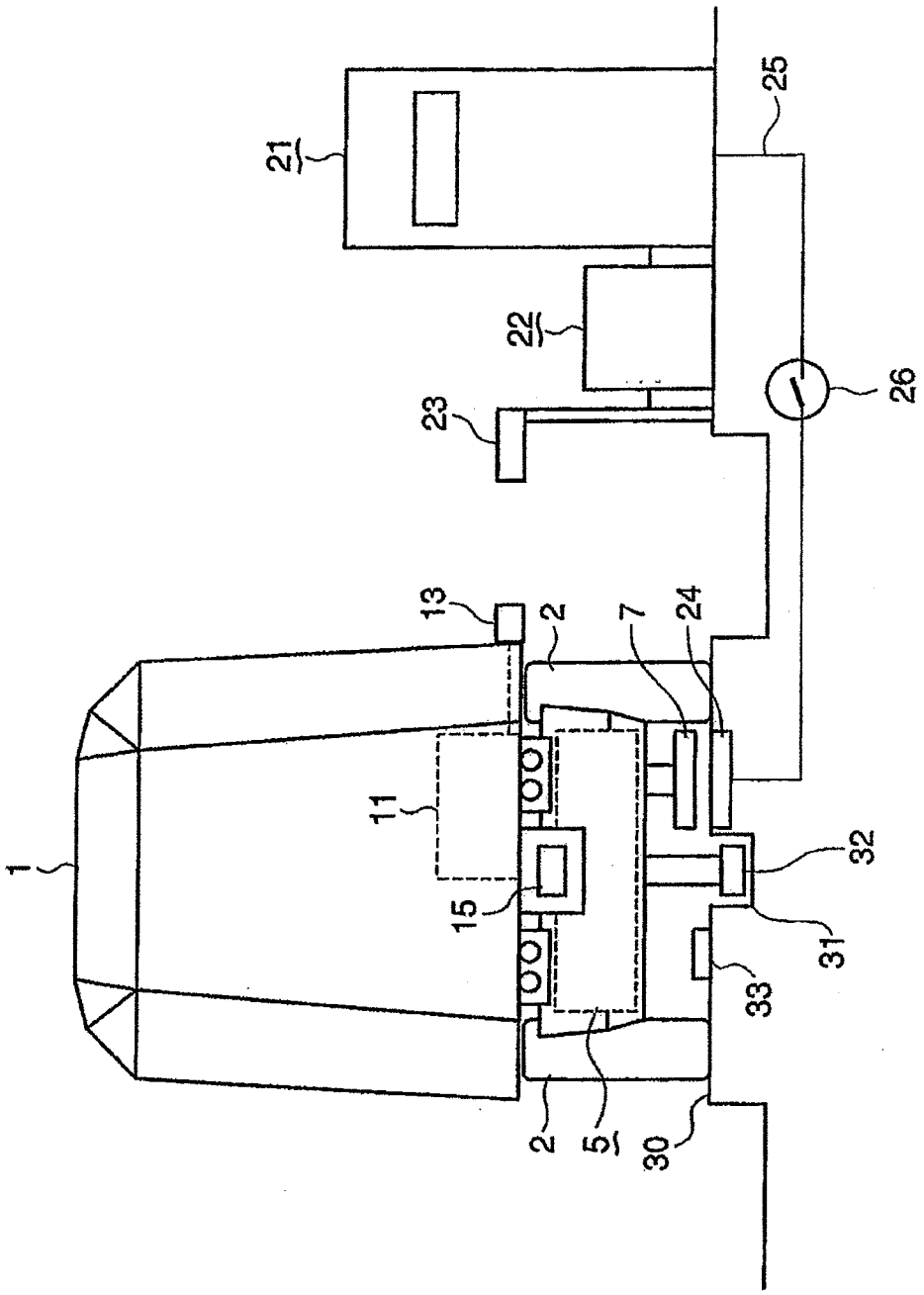

Fig.13

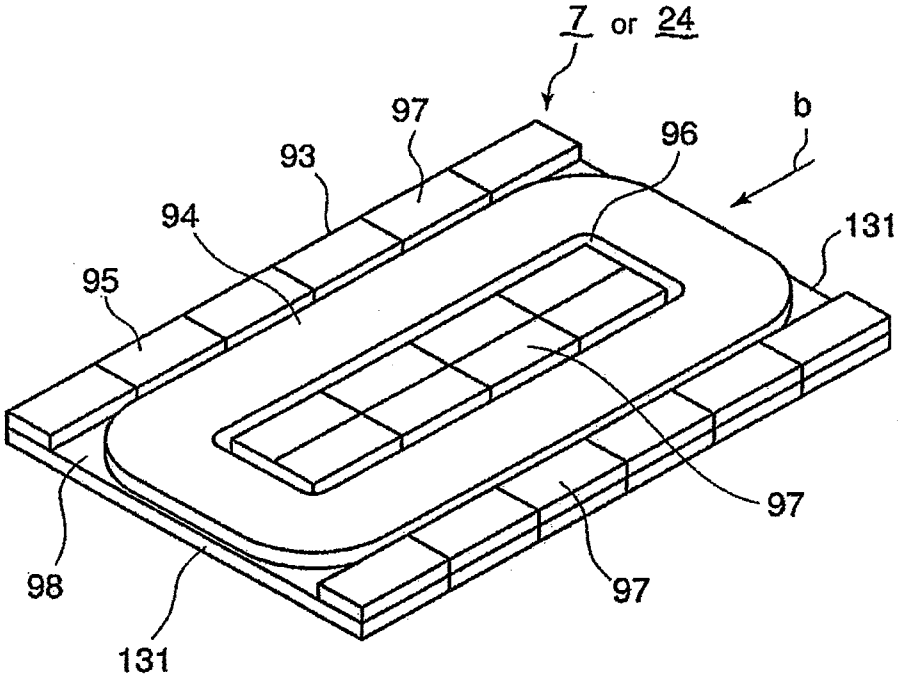

Fig.14

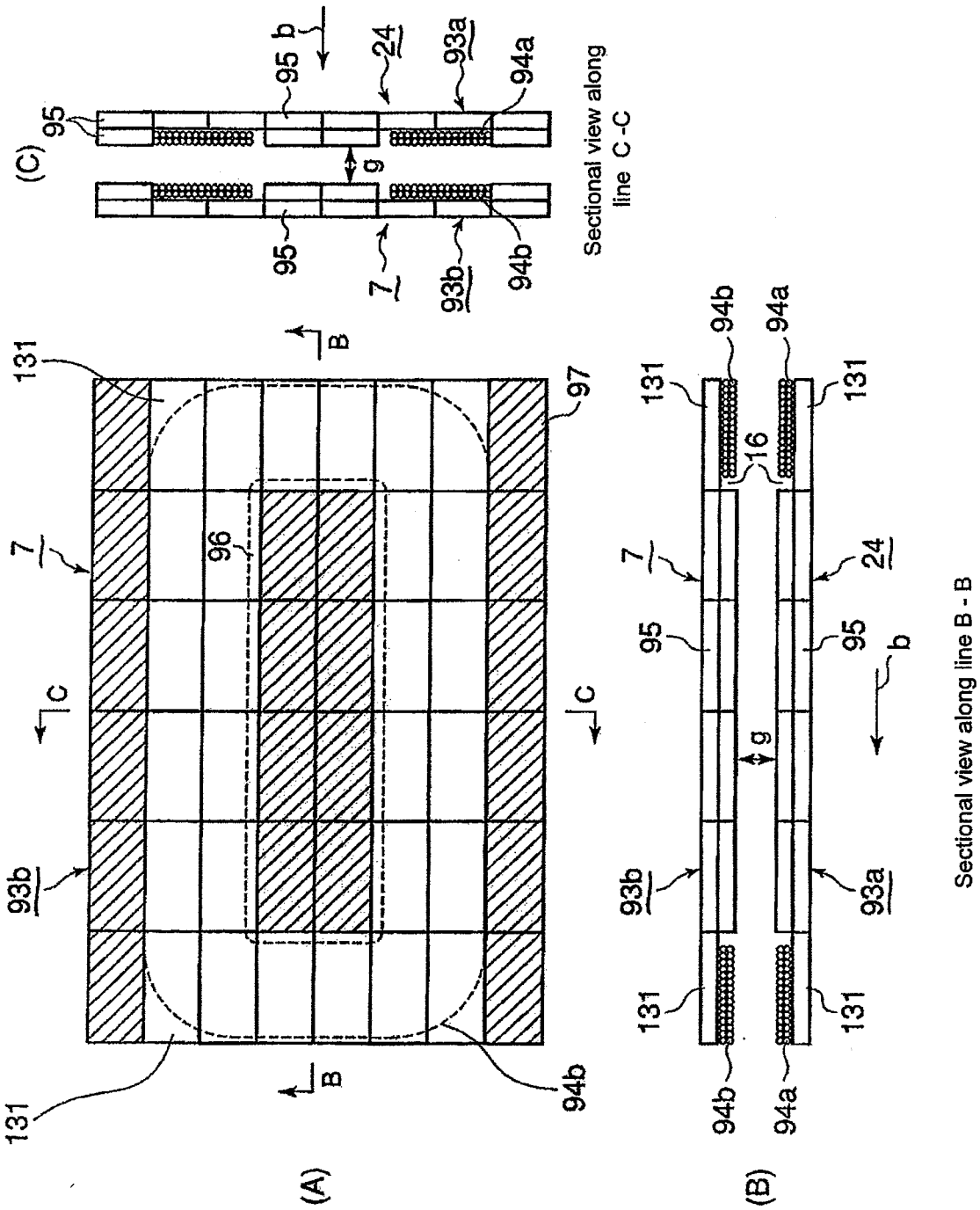
(A)
(B)
(C)
Sectional view along line C-C
Sectional view along line B - B
131
97
96
7
93b
94b
94a
95
24
93a
16
b
g
B
C

Fig.15

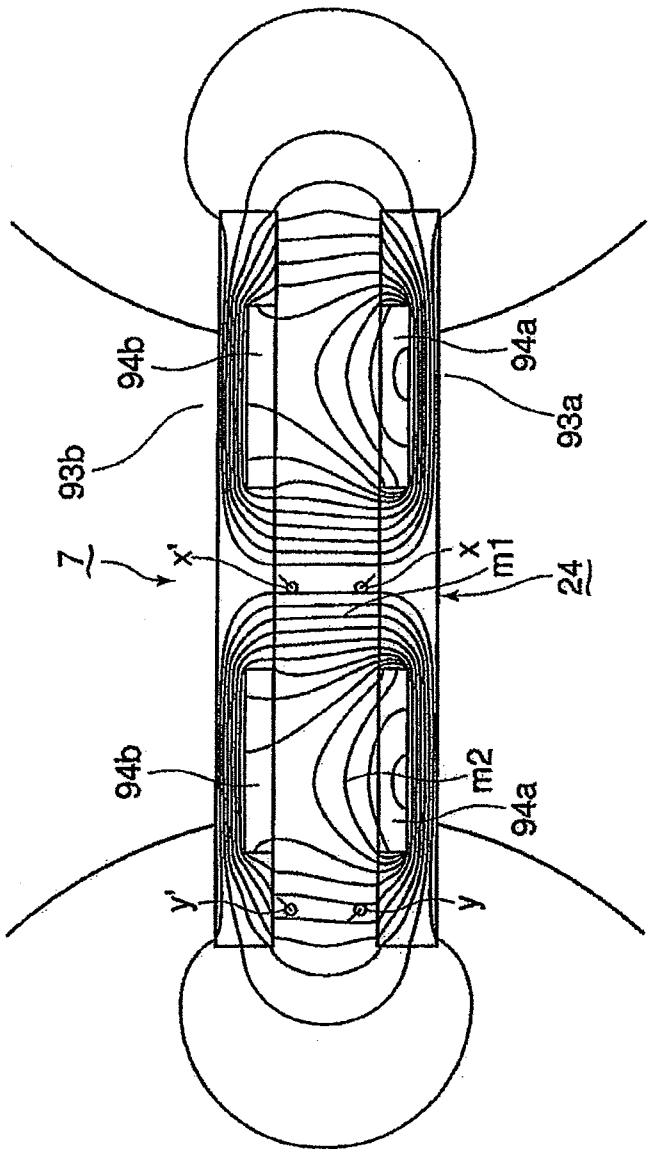

Fig.16

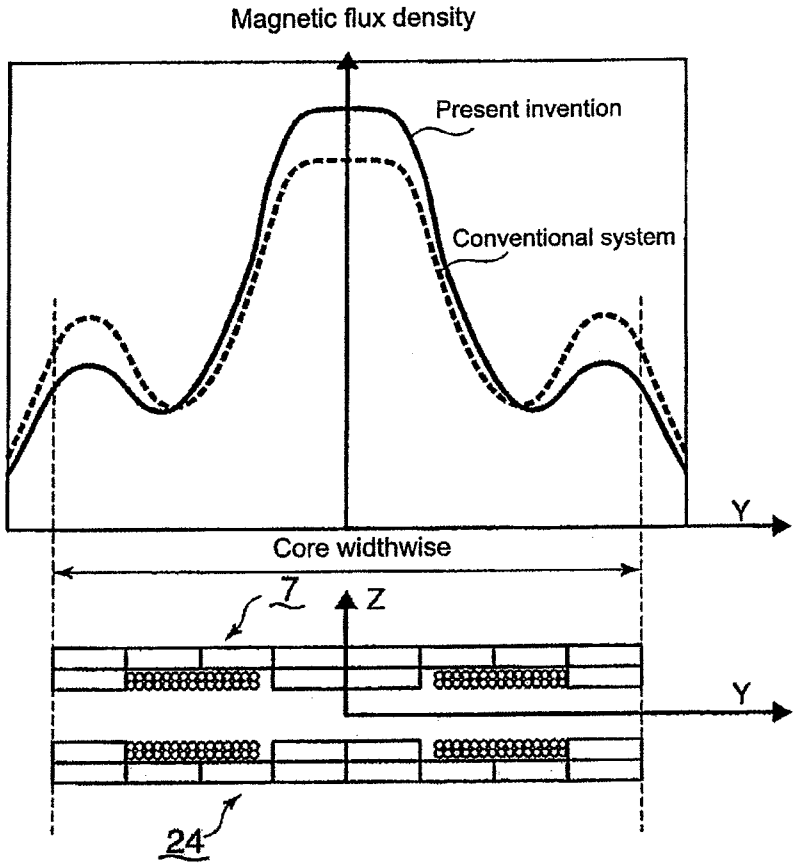
Magnetic flux density
Present invention
Conventional system
Y
Core widthwise
7
Z
Y
24

Fig.17

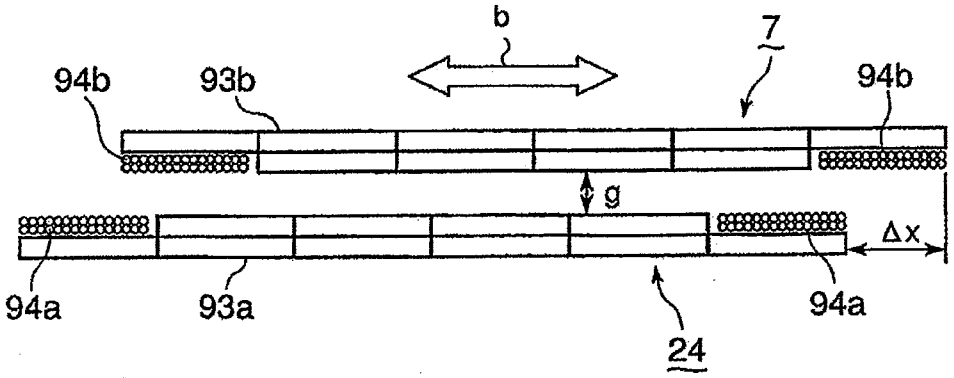
b
7
94b
93b
94b
g
Δx
94a
93a
94a
24

Fig.18

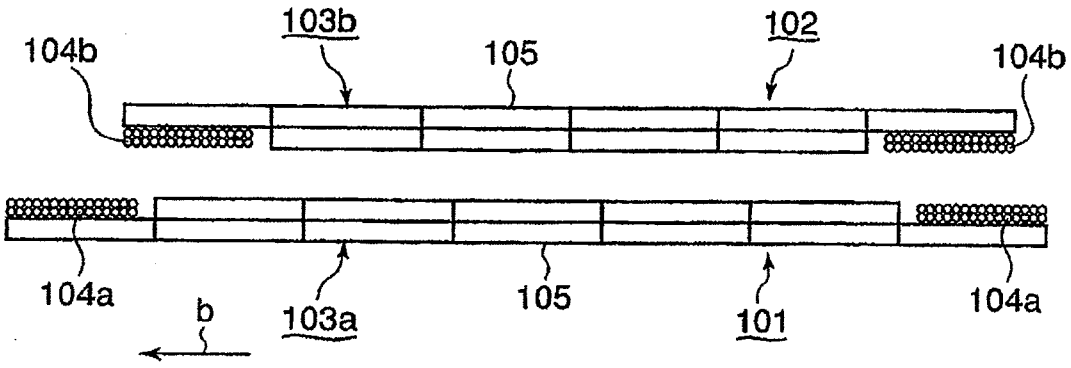

Fig.19

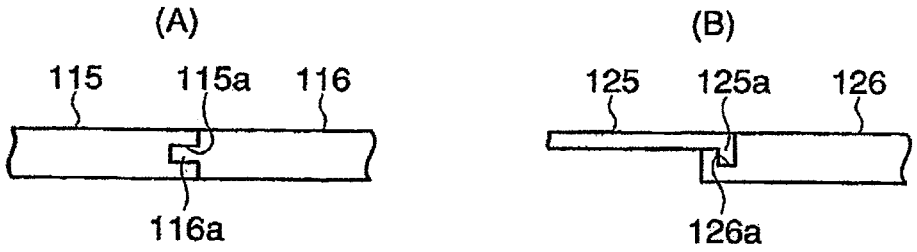

Fig.20

