FIG.1

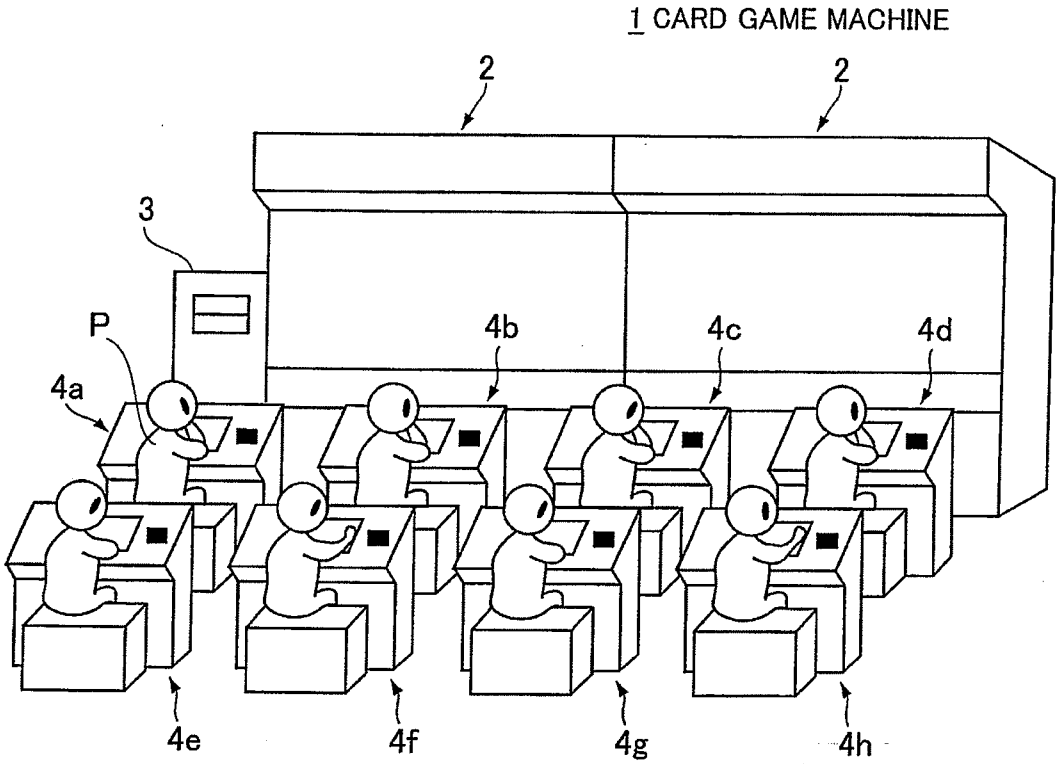

FIG.2

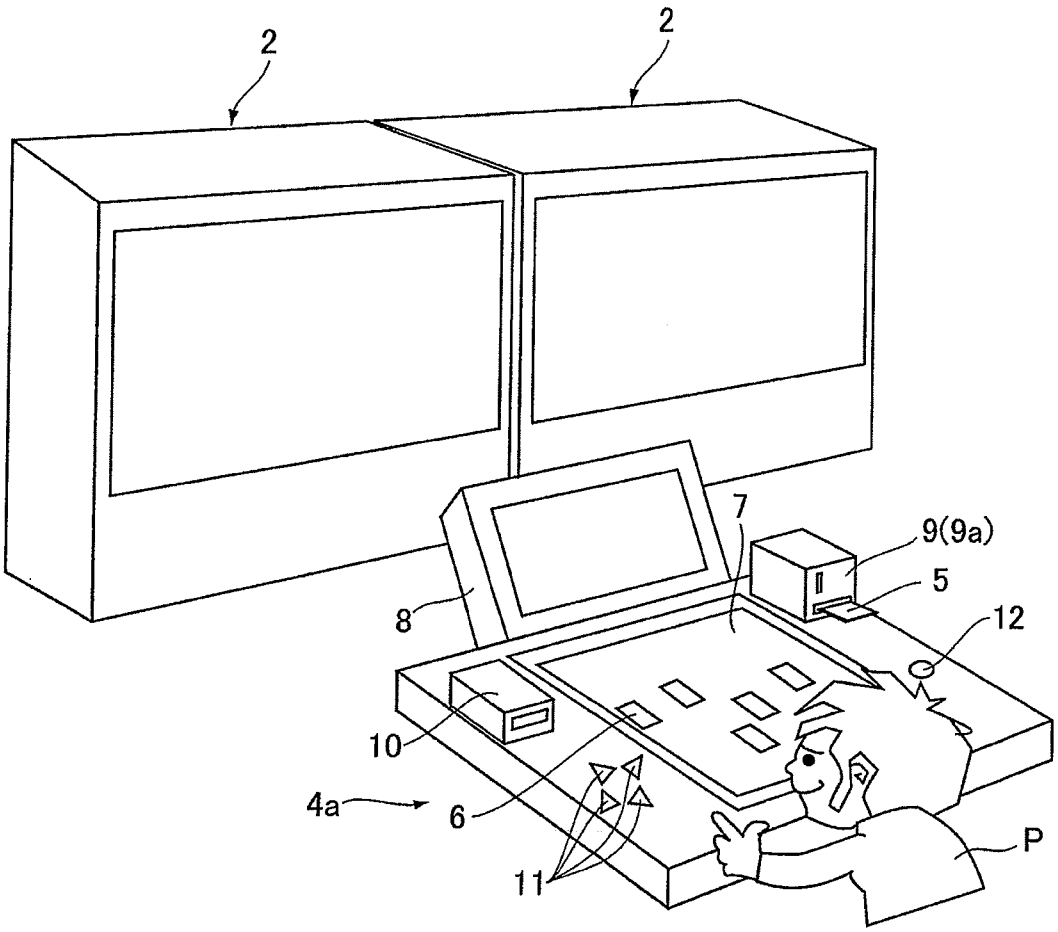

FIG.3

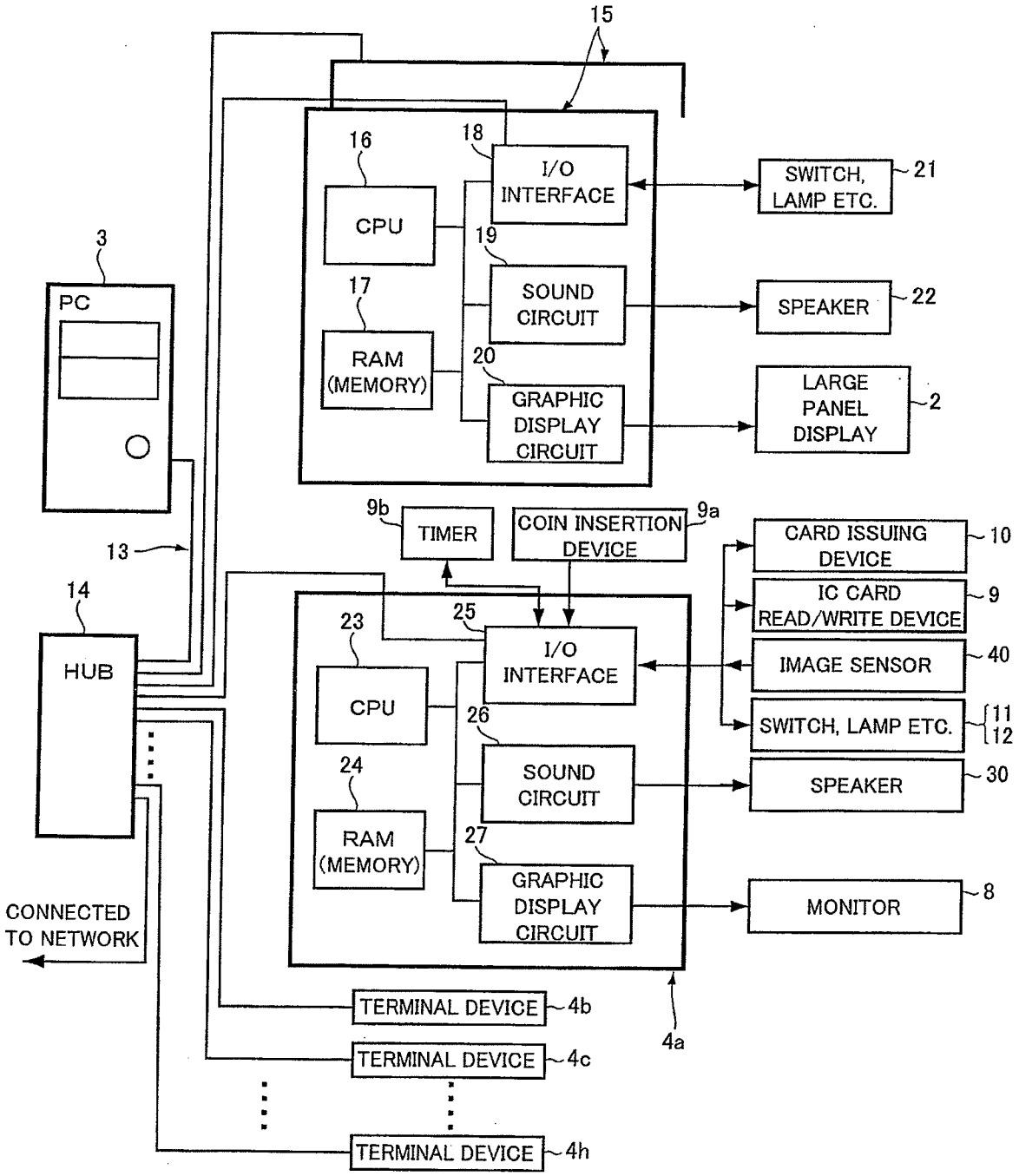
15
16
18
I/O INTERFACE
SWITCH, LAMP ETC.
21
CPU
19
SOUND CIRCUIT
SPEAKER
22
3
PC
17
RAM (MEMORY)
20
GRAPHIC DISPLAY CIRCUIT
LARGE PANEL DISPLAY
2
9b
TIMER
COIN INSERTION DEVICE
9a
CARD ISSUING DEVICE
10
13
IC CARD READ/WRITE DEVICE
9
14
23
25
I/O INTERFACE
IMAGE SENSOR
40
HUB
CPU
26
SWITCH, LAMP ETC.
11
12
24
SOUND CIRCUIT
SPEAKER
30
RAM (MEMORY)
27
GRAPHIC DISPLAY CIRCUIT
MONITOR
8
CONNECTED TO NETWORK
4a
TERMINAL DEVICE
4b
TERMINAL DEVICE
4c
TERMINAL DEVICE
4h

FIG.4

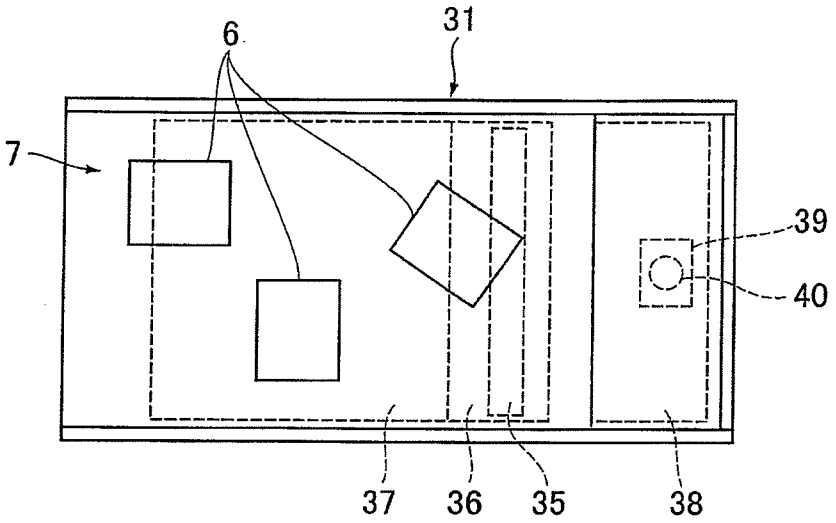

FIG.5

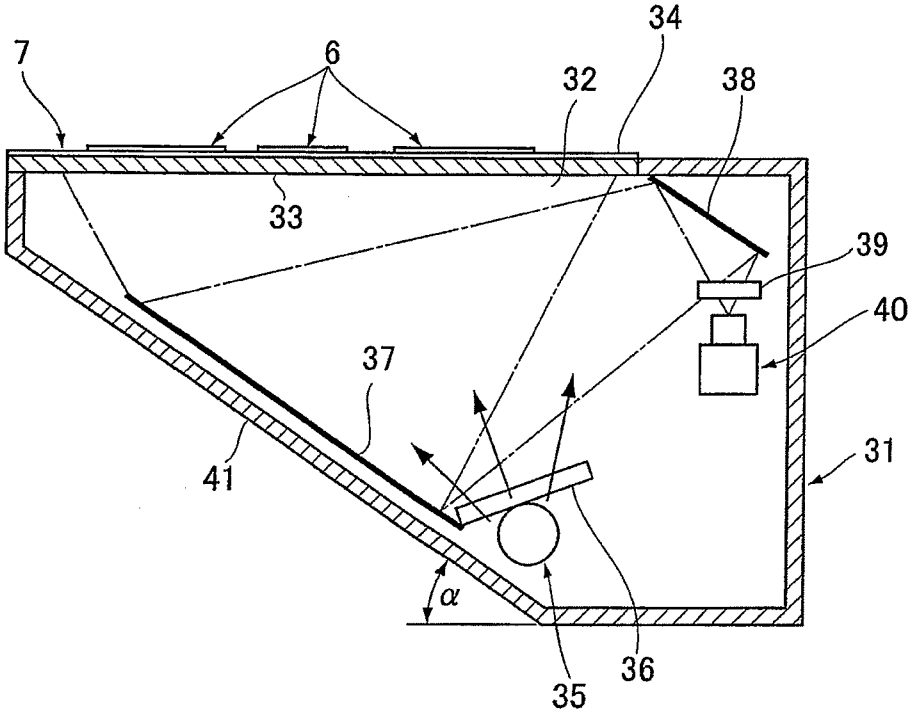

FIG.6

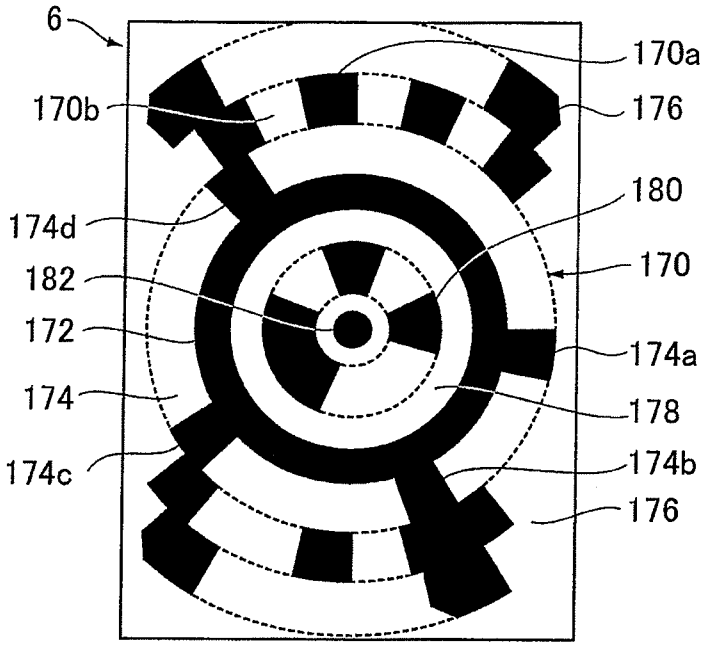
6
170a
170b
176
180
174d
170
182
172
174a
174
178
174c
174b
176

FIG.7

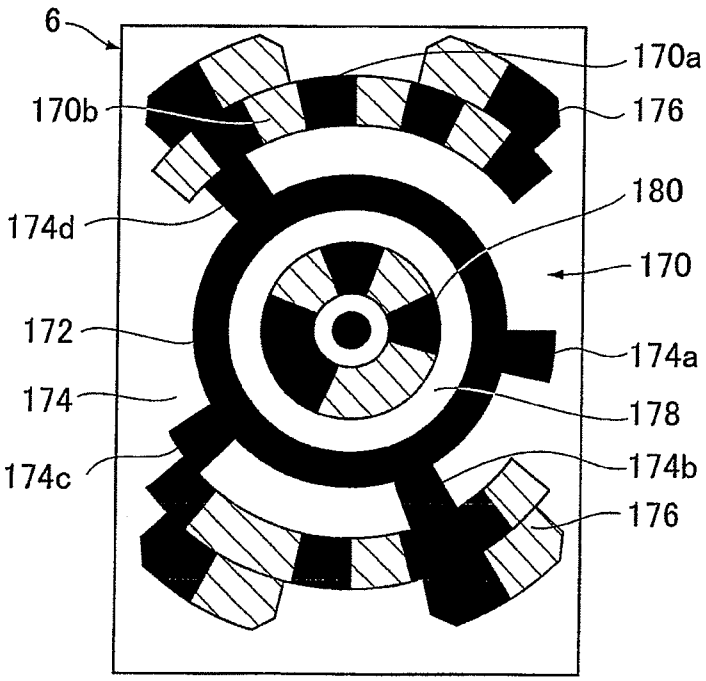
6
170a
170b
176
180
174d
170
172
174a
174
178
174c
174b
176

FIG.8

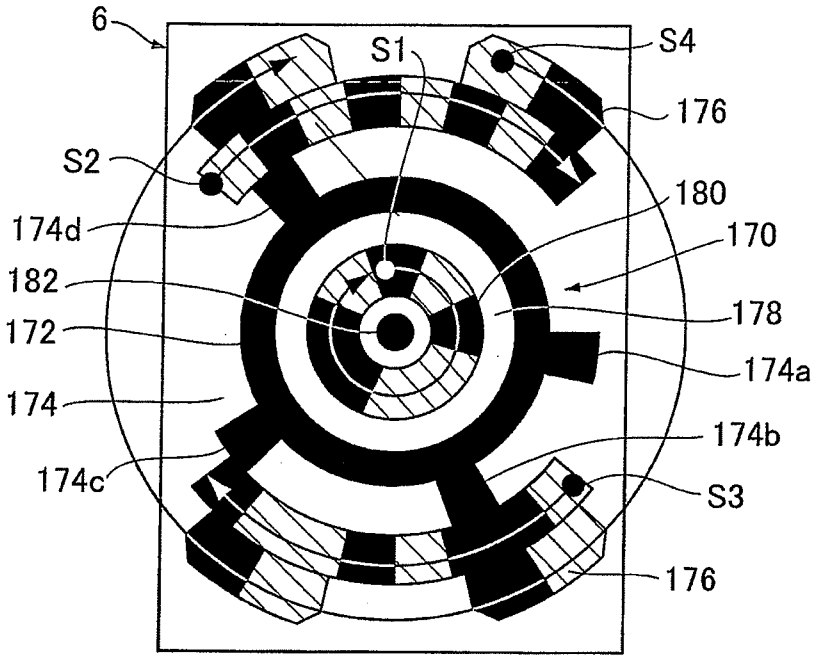
6
S1
S4
176
S2
180
174d
170
182
178
172
174a
174
174b
174c
S3
176

FIG.9

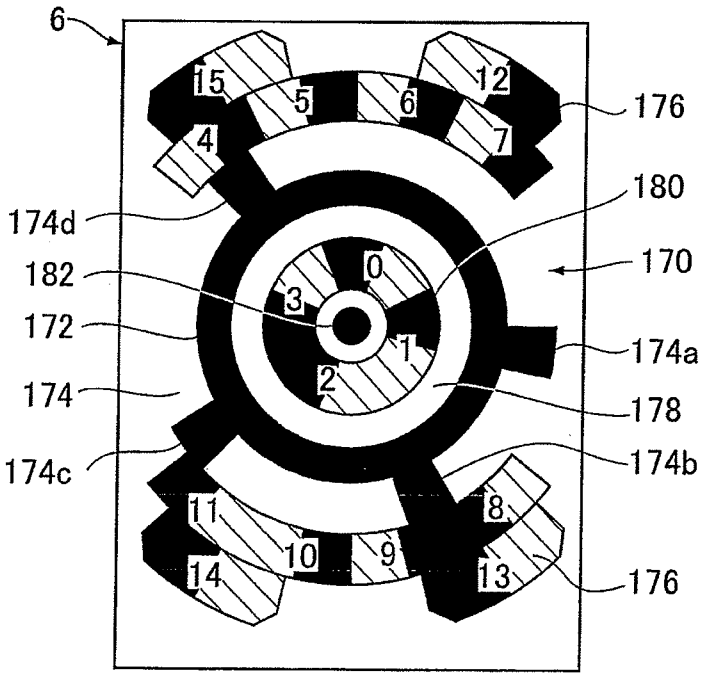
6
15
5
6
12
176
4
7
180
174d
170
182
0
3
172
1
174a
2
174
178
174c
174b
11
8
10
9
14
13
176

FIG.10

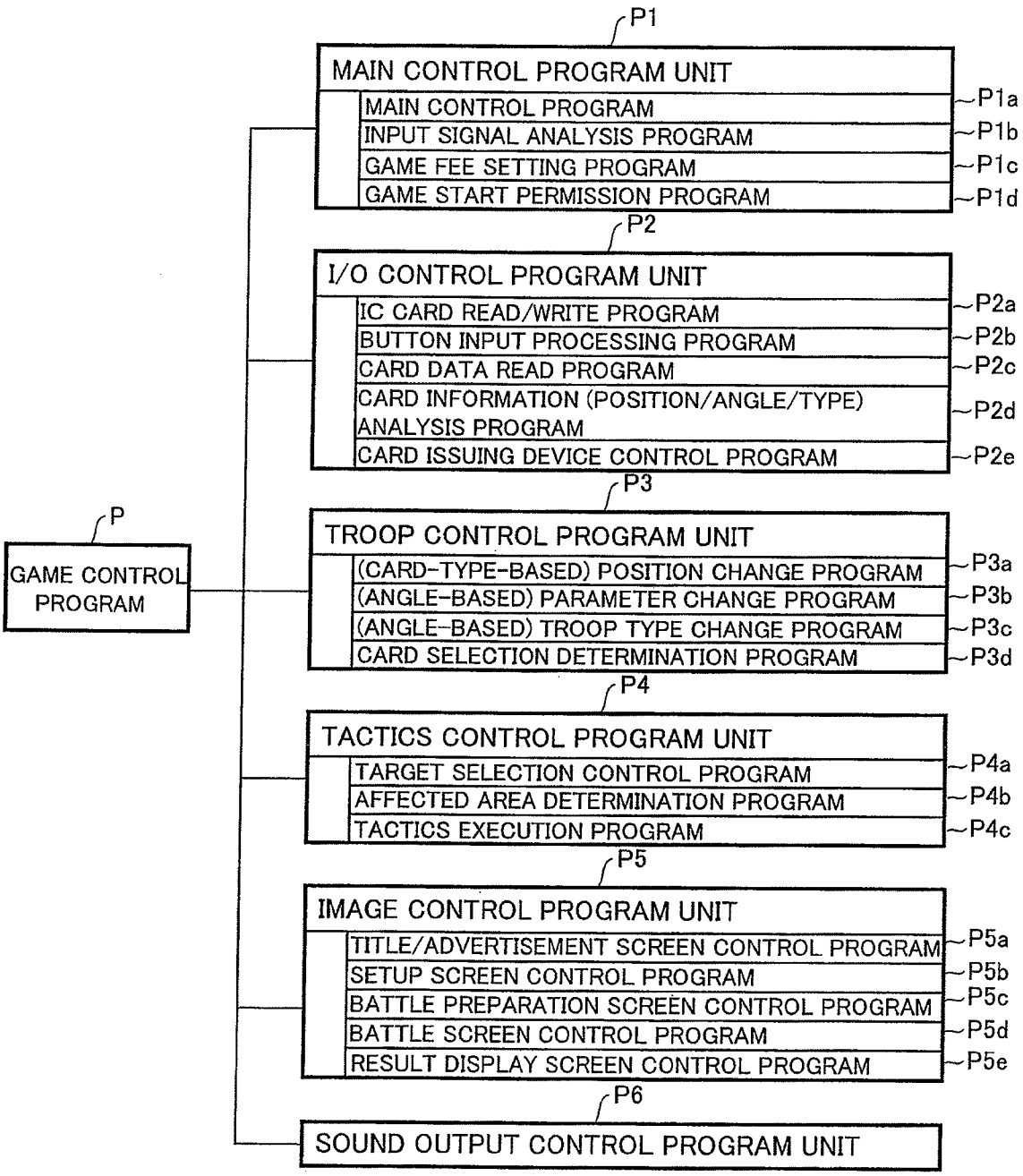
P
GAME CONTROL PROGRAM
P1
MAIN CONTROL PROGRAM UNIT
MAIN CONTROL PROGRAM
INPUT SIGNAL ANALYSIS PROGRAM
GAME FEE SETTING PROGRAM
GAME START PERMISSION PROGRAM
P1a
P1b
P1c
P1d
P2
I/O CONTROL PROGRAM UNIT
IC CARD READ/WRITE PROGRAM
BUTTON INPUT PROCESSING PROGRAM
CARD DATA READ PROGRAM
CARD INFORMATION (POSITION/ANGLE/TYPE) ANALYSIS PROGRAM
CARD ISSUING DEVICE CONTROL PROGRAM
P2a
P2b
P2c
P2d
P2e
P3
TROOP CONTROL PROGRAM UNIT
(CARD-TYPE-BASED) POSITION CHANGE PROGRAM
(ANGLE-BASED) PARAMETER CHANGE PROGRAM
(ANGLE-BASED) TROOP TYPE CHANGE PROGRAM
CARD SELECTION DETERMINATION PROGRAM
P3a
P3b
P3c
P3d
P4
TACTICS CONTROL PROGRAM UNIT
TARGET SELECTION CONTROL PROGRAM
AFFECTED AREA DETERMINATION PROGRAM
TACTICS EXECUTION PROGRAM
P4a
P4b
P4c
P5
IMAGE CONTROL PROGRAM UNIT
TITLE/ADVERTISEMENT SCREEN CONTROL PROGRAM
SETUP SCREEN CONTROL PROGRAM
BATTLE PREPARATION SCREEN CONTROL PROGRAM
BATTLE SCREEN CONTROL PROGRAM
RESULT DISPLAY SCREEN CONTROL PROGRAM
P5a
P5b
P5c
P5d
P5e
P6
SOUND OUTPUT CONTROL PROGRAM UNIT

FIG.11

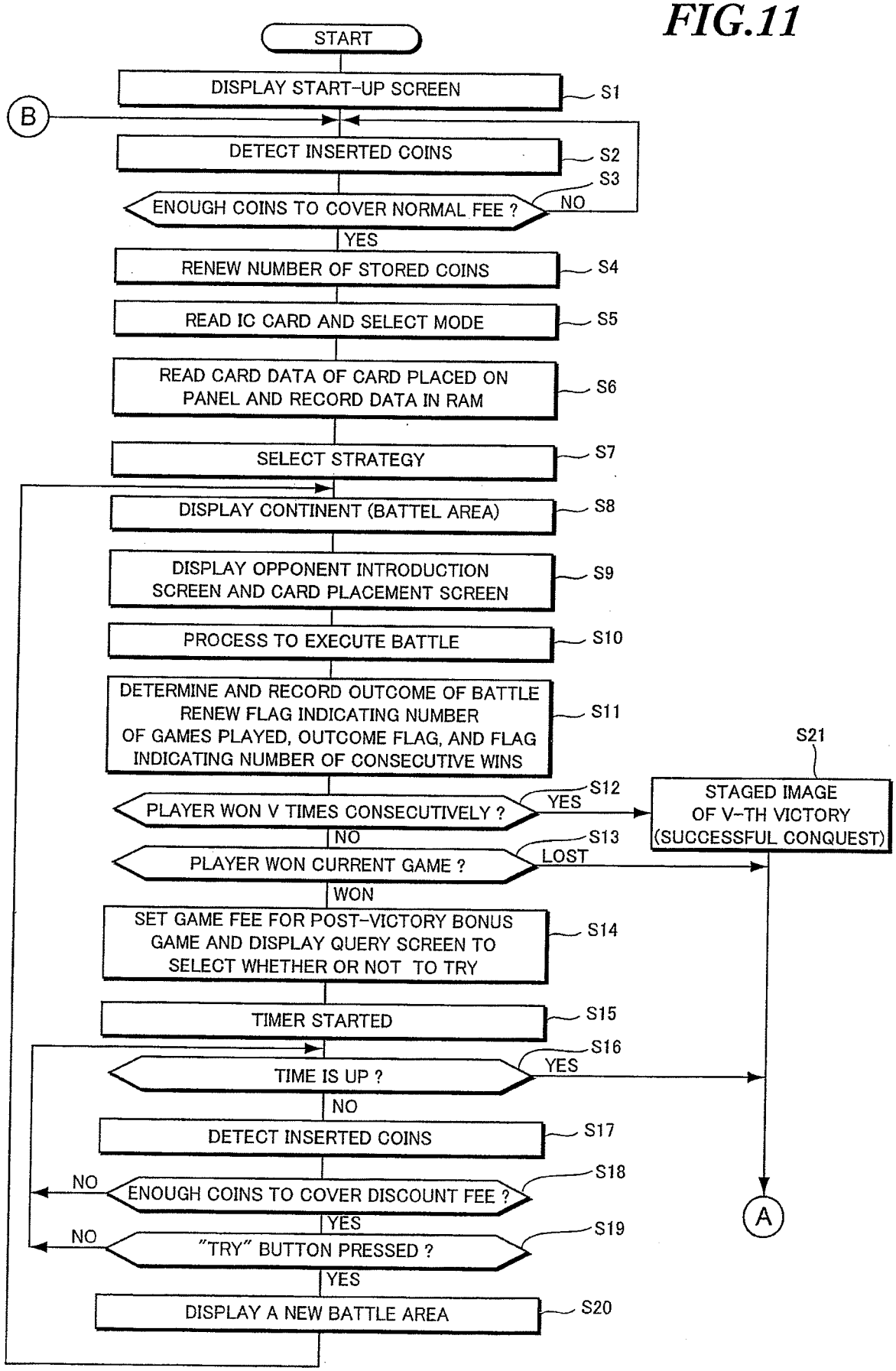
START
DISPLAY START-UP SCREEN
S1
B
DETECT INSERTED COINS
S2
S3
ENOUGH COINS TO COVER NORMAL FEE ?
NO
YES
RENEW NUMBER OF STORED COINS
S4
READ IC CARD AND SELECT MODE
S5
READ CARD DATA OF CARD PLACED ON PANEL AND RECORD DATA IN RAM
S6
SELECT STRATEGY
S7
DISPLAY CONTINENT (BATTEL AREA)
S8
DISPLAY OPPONENT INTRODUCTION SCREEN AND CARD PLACEMENT SCREEN
S9
PROCESS TO EXECUTE BATTLE
S10
DETERMINE AND RECORD OUTCOME OF BATTLE RENEW FLAG INDICATING NUMBER OF GAMES PLAYED, OUTCOME FLAG, AND FLAG INDICATING NUMBER OF CONSECUTIVE WINS
S11
S21
S12
PLAYER WON V TIMES CONSECUTIVELY ?
YES
STAGED IMAGE OF V-TH VICTORY (SUCCESSFUL CONQUEST)
NO
S13
PLAYER WON CURRENT GAME ?
LOST
WON
SET GAME FEE FOR POST-VICTORY BONUS GAME AND DISPLAY QUERY SCREEN TO SELECT WHETHER OR NOT TO TRY
S14
TIMER STARTED
S15
S16
TIME IS UP ?
YES
NO
DETECT INSERTED COINS
S17
NO
S18
ENOUGH COINS TO COVER DISCOUNT FEE ?
YES
NO
S19
"TRY" BUTTON PRESSED ?
YES
DISPLAY A NEW BATTLE AREA
S20
A

FIG.12

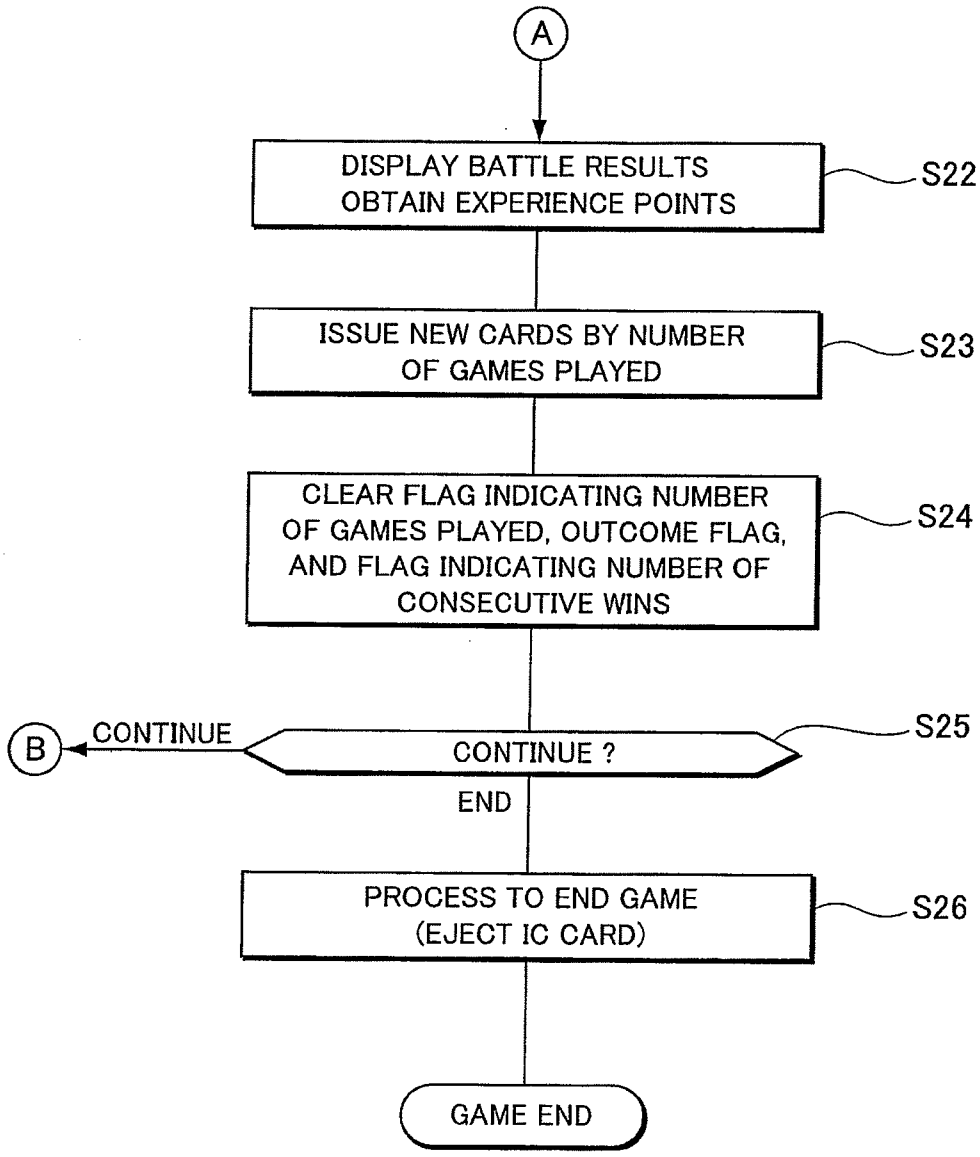
A
DISPLAY BATTLE RESULTS
OBTAIN EXPERIENCE POINTS
S22
ISSUE NEW CARDS BY NUMBER
OF GAMES PLAYED
S23
CLEAR FLAG INDICATING NUMBER
OF GAMES PLAYED, OUTCOME FLAG,
AND FLAG INDICATING NUMBER OF
CONSECUTIVE WINS
S24
B
CONTINUE
CONTINUE ?
S25
END
PROCESS TO END GAME
(EJECT IC CARD)
S26
GAME END

FIG.13



FIG.14

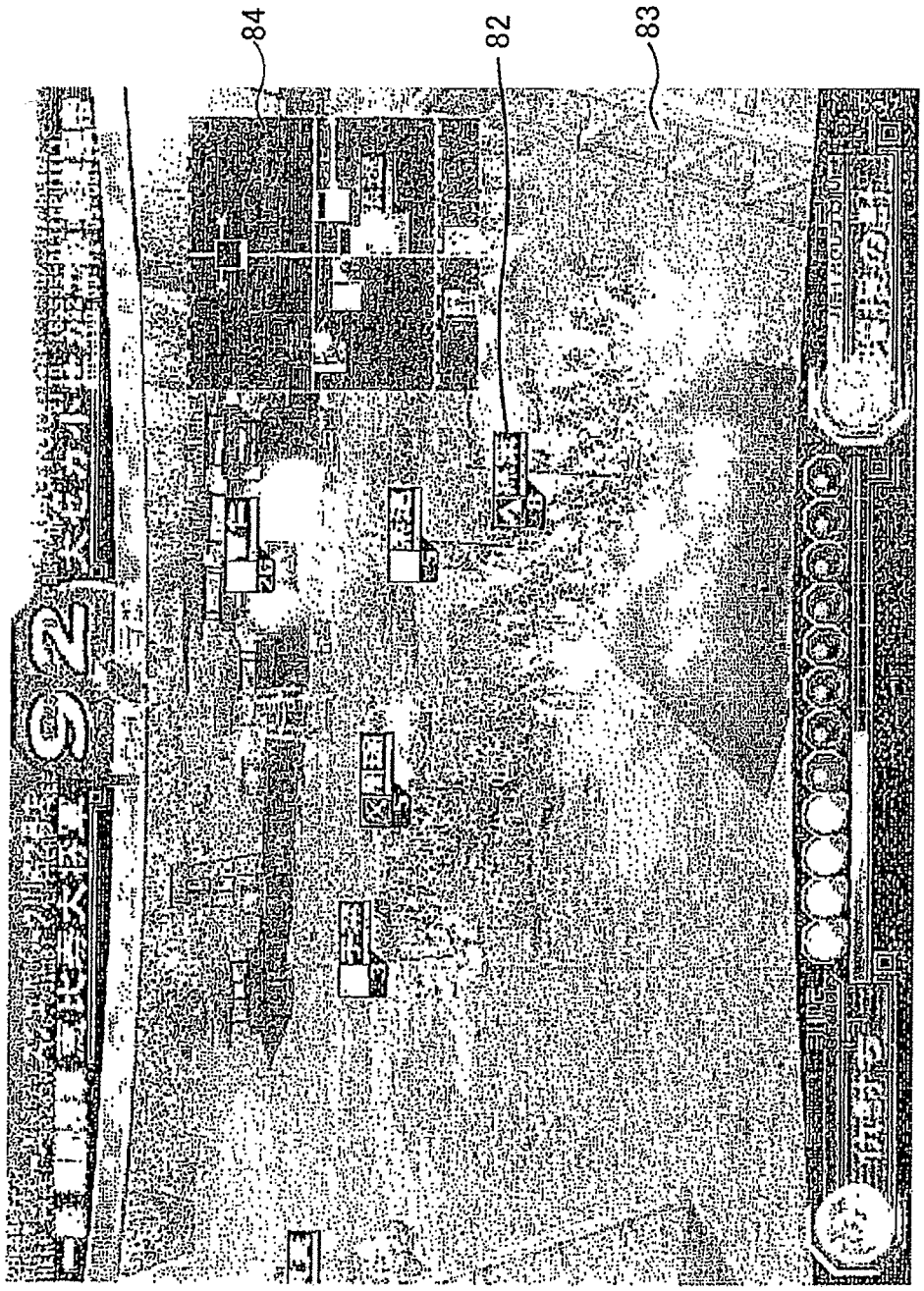

FIG.15

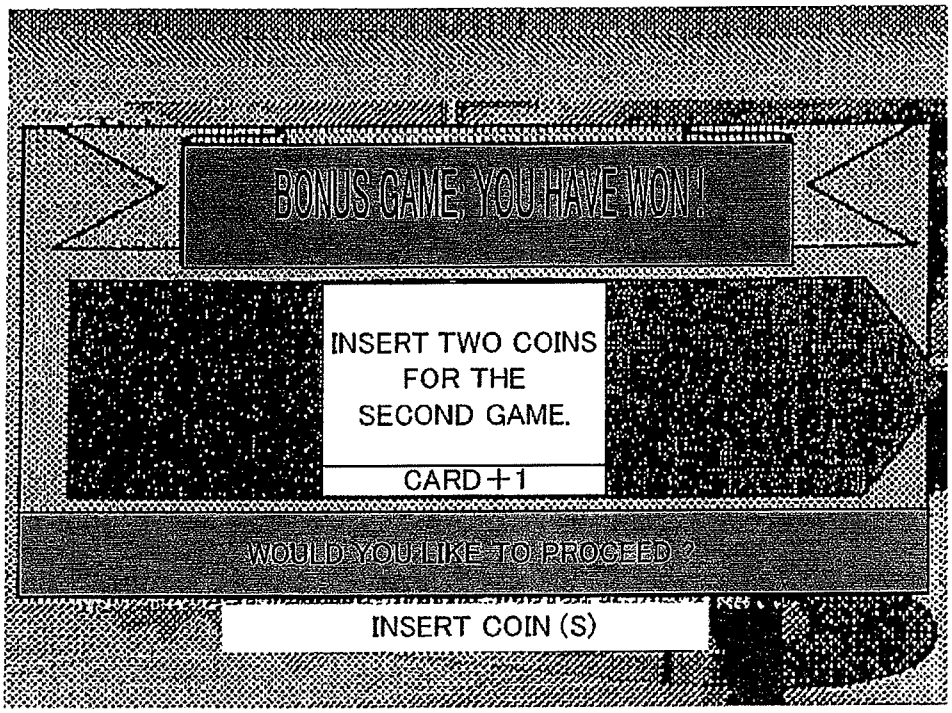
BONUS GAME, YOU HAVE WON !
INSERT TWO COINS
FOR THE
SECOND GAME.
CARD+1
WOULD YOU LIKE TO PROCEED ?
INSERT COIN (S)