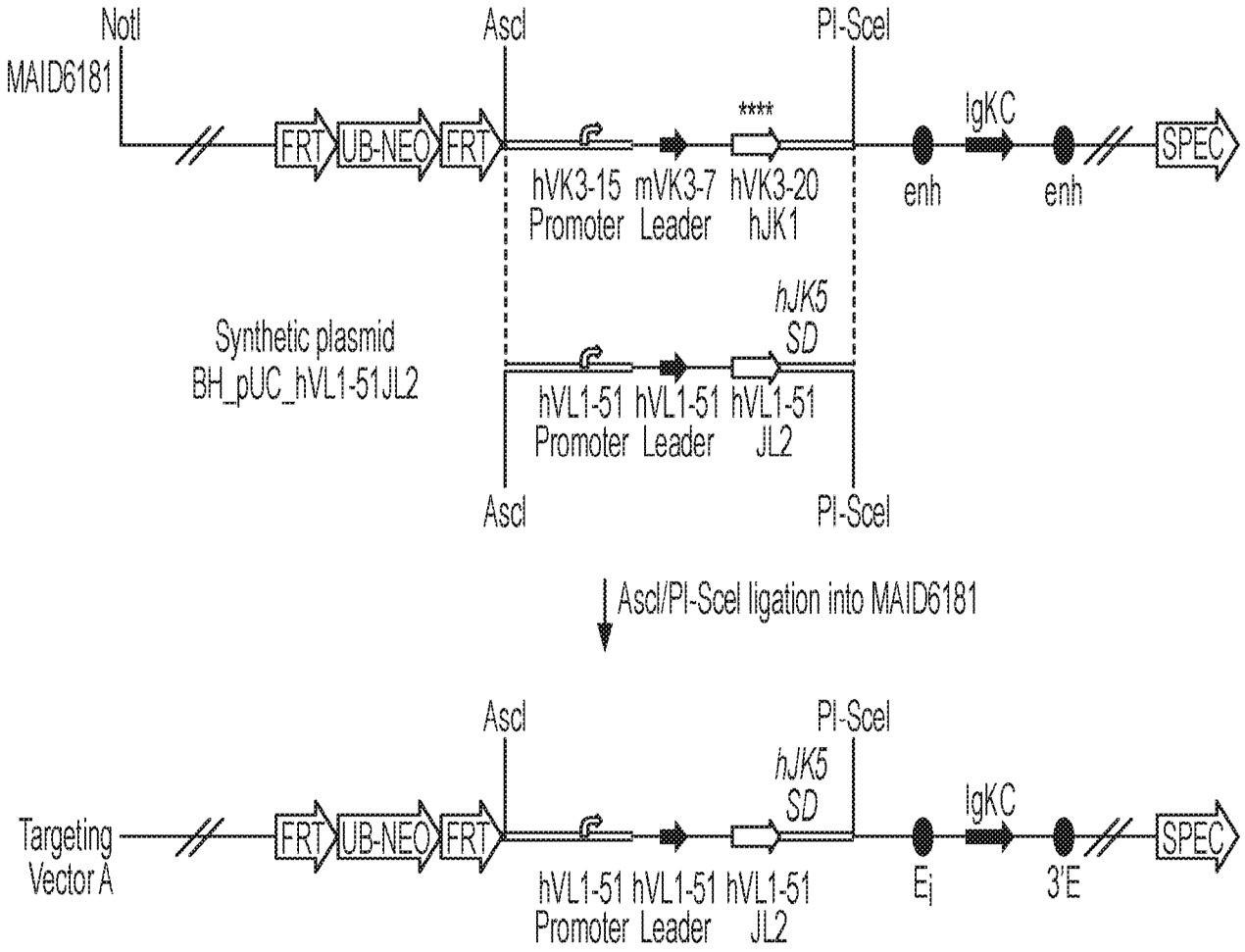
NotI
MAID6181
AscI
PI-SceI
FRT
UB-NEO
FRT
****
IgKC
SPEC
hVK3-15 mVK3-7 hVK3-20
Promoter Leader hJK1
enh
enh
hJK5
SD
Synthetic plasmid
BH_pUC_hVL1-51JL2
hVL1-51 hVL1-51 hVL1-51
Promoter Leader JL2
AscI
PI-SceI
AscI/PI-SceI ligation into MAID6181
AscI
PI-SceI
hJK5
SD
Targeting
Vector A
FRT
UB-NEO
FRT
IgKC
SPEC
hVL1-51 hVL1-51 hVL1-51
Promoter Leader JL2
Ej
3'E

Figure 1A

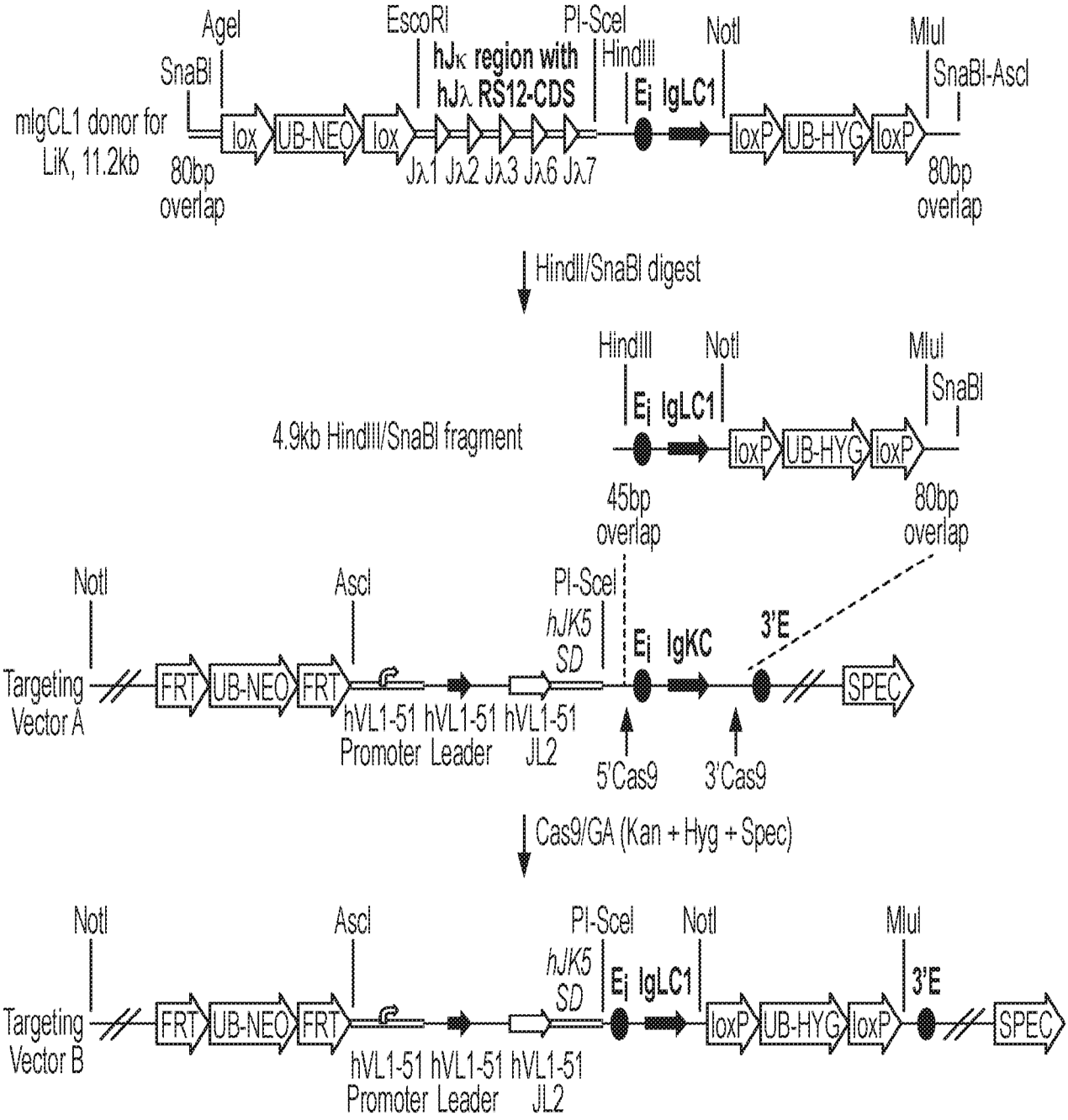
AgeI
EscoRI
PI-SceI
NotI
MluI
SnaBI
hJκ region with
hJλ RS12-CDS
HindIII
SnaBI-AscI
mIgCL1 donor for
LiK, 11.2kb
lox
UB-NEO
lox
Eⱼ IgLC1
loxP
UB-HYG
loxP
80bp
overlap
Jλ1 Jλ2 Jλ3 Jλ6 Jλ7
80bp
overlap
HindII/SnaBI digest
HindIII
NotI
MluI
SnaBI
4.9kb HindIII/SnaBI fragment
Eⱼ IgLC1
loxP
UB-HYG
loxP
45bp
overlap
80bp
overlap
NotI
AscI
PI-SceI
hJK5
SD
Eⱼ IgKC
3'E
Targeting
Vector A
FRT
UB-NEO
FRT
hVL1-51 hVL1-51 hVL1-51
Promoter Leader JL2
SPEC
5'Cas9
3'Cas9
Cas9/GA (Kan + Hyg + Spec)
NotI
AscI
PI-SceI
NotI
MluI
hJK5
SD
Eⱼ IgLC1
3'E
Targeting
Vector B
FRT
UB-NEO
FRT
loxP
UB-HYG
loxP
SPEC
hVL1-51 hVL1-51 hVL1-51
Promoter Leader JL2

Figure 1B

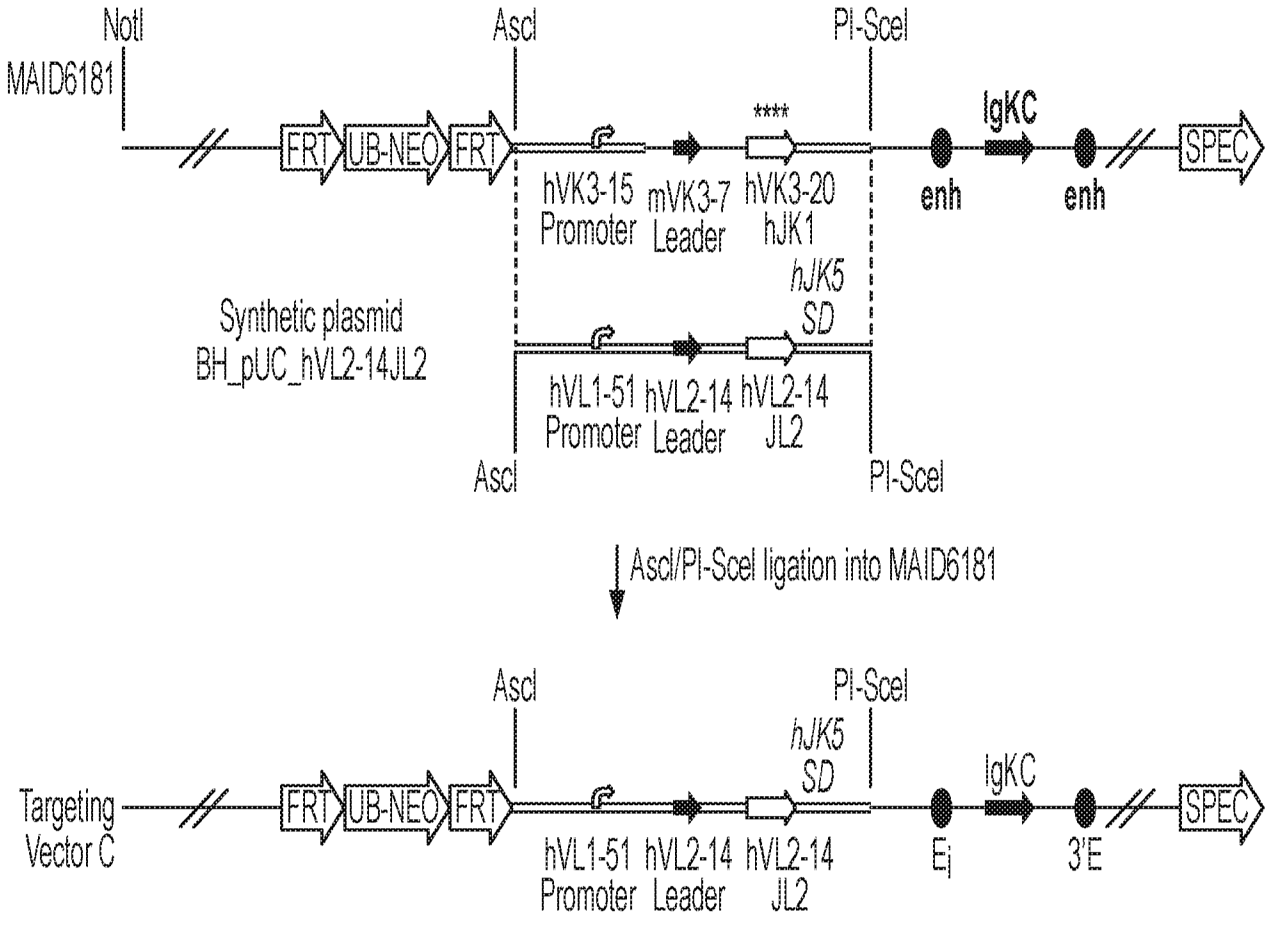
NotI
MAID6181
AscI
PI-SceI
FRT
UB-NEO
FRT
****
IgKC
SPEC
hVK3-15
Promoter
mVK3-7
Leader
hVK3-20
hJK1
enh
enh
hJK5
SD
Synthetic plasmid
BH_pUC_hVL2-14JL2
hVL1-51
Promoter
hVL2-14
Leader
hVL2-14
JL2
AscI
PI-SceI
AscI/PI-SceI ligation into MAID6181
Targeting
Vector C
AscI
PI-SceI
hJK5
SD
IgKC
FRT
UB-NEO
FRT
SPEC
hVL1-51
Promoter
hVL2-14
Leader
hVL2-14
JL2
Ej
3'E

Figure 2A

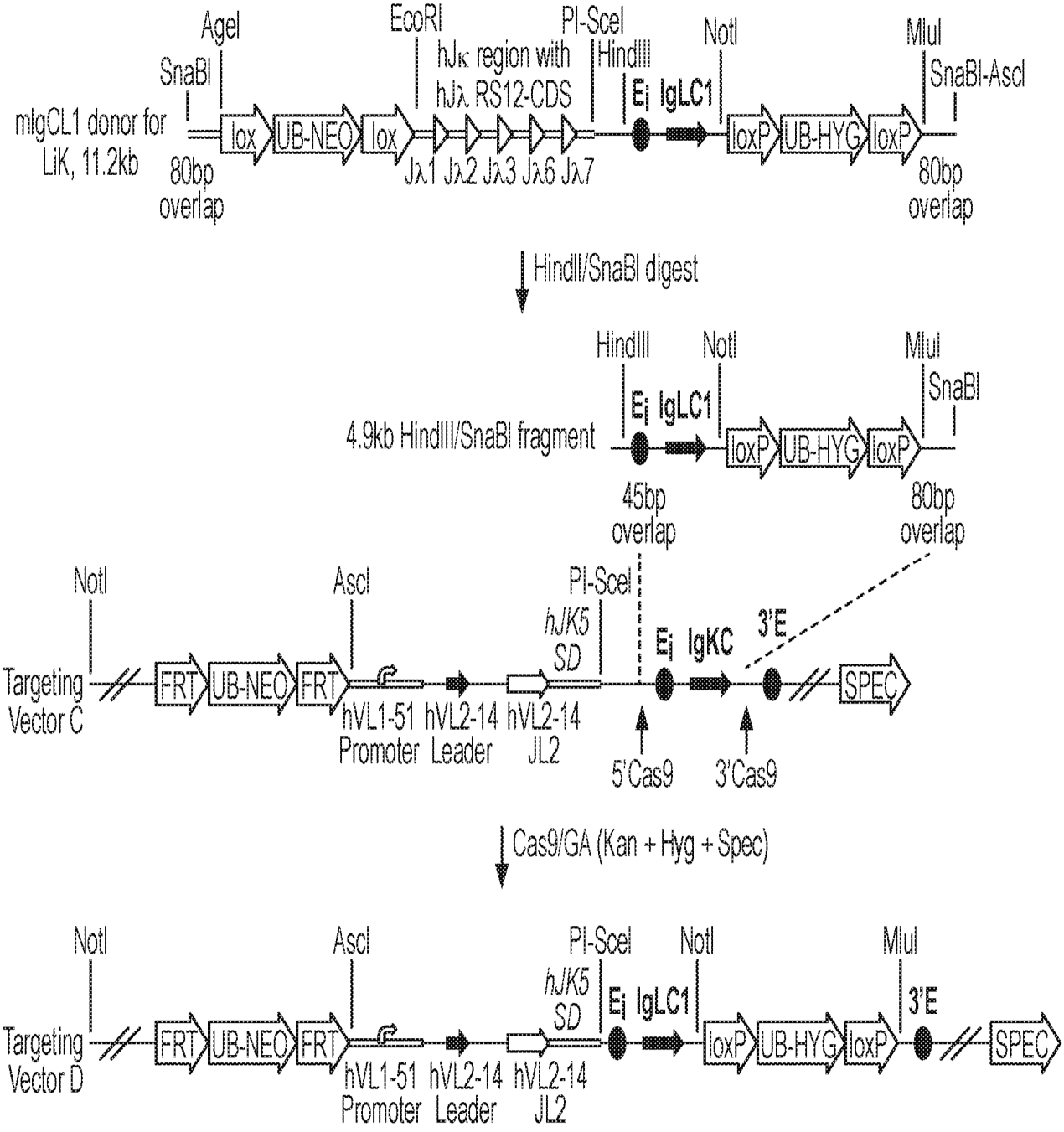
AgeI
EcoRI
PI-SceI
NotI
MluI
SnaBI
hJκ region with
HindIII
SnaBI-AscI
hJλ RS12-CDS
Ei IgLC1
mIgCL1 donor for
LiK, 11.2kb
lox
UB-NEO
lox
loxP
UB-HYG
loxP
Jλ1 Jλ2 Jλ3 Jλ6 Jλ7
80bp
overlap
80bp
overlap
HindII/SnaBI digest
HindIII
NotI
MluI
SnaBI
Ei IgLC1
4.9kb HindIII/SnaBI fragment
loxP
UB-HYG
loxP
45bp
overlap
80bp
overlap
NotI
AscI
PI-SceI
hJK5
SD
Ei IgKC
3'E
Targeting
Vector C
FRT
UB-NEO
FRT
SPEC
hVL1-51 hVL2-14 hVL2-14
Promoter Leader JL2
5'Cas9
3'Cas9
Cas9/GA (Kan + Hyg + Spec)
NotI
AscI
PI-SceI
NotI
MluI
hJK5
SD
Ei IgLC1
3'E
Targeting
Vector D
FRT
UB-NEO
FRT
loxP
UB-HYG
loxP
SPEC
hVL1-51 hVL2-14 hVL2-14
Promoter Leader JL2

Figure 2B

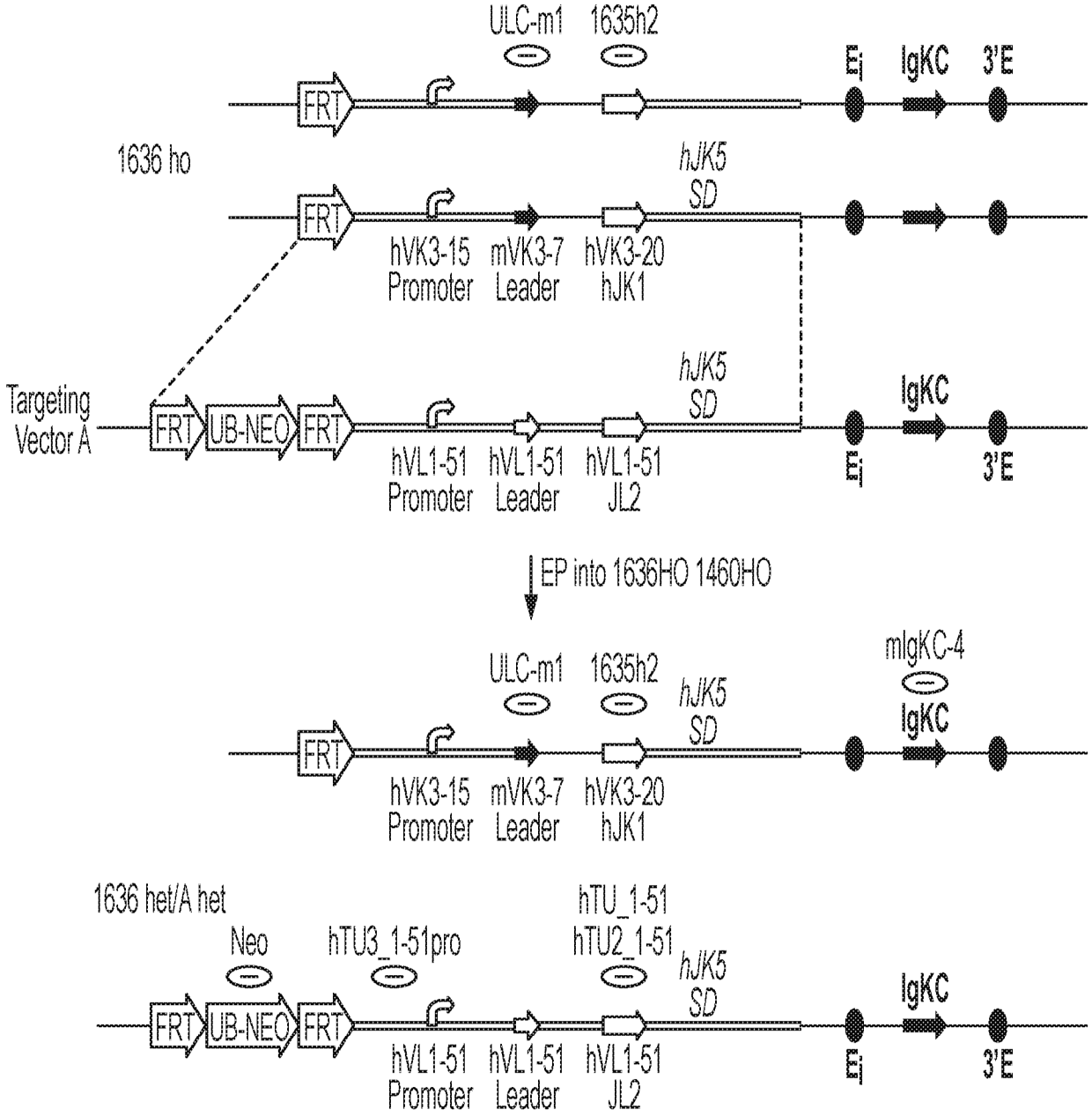
ULC-m1
1635h2
Ej
IgKC
3'E
FRT
1636 ho
hJK5
SD
hVK3-15
Promoter
mVK3-7
Leader
hVK3-20
hJK1
Targeting
Vector A
UB-NEO
hVL1-51
Promoter
hVL1-51
Leader
hVL1-51
JL2
EP into 1636HO 1460HO
mIgKC-4
1636 het/A het
Neo
hTU3_1-51pro
hTU_1-51
hTU2_1-51

Figure 3

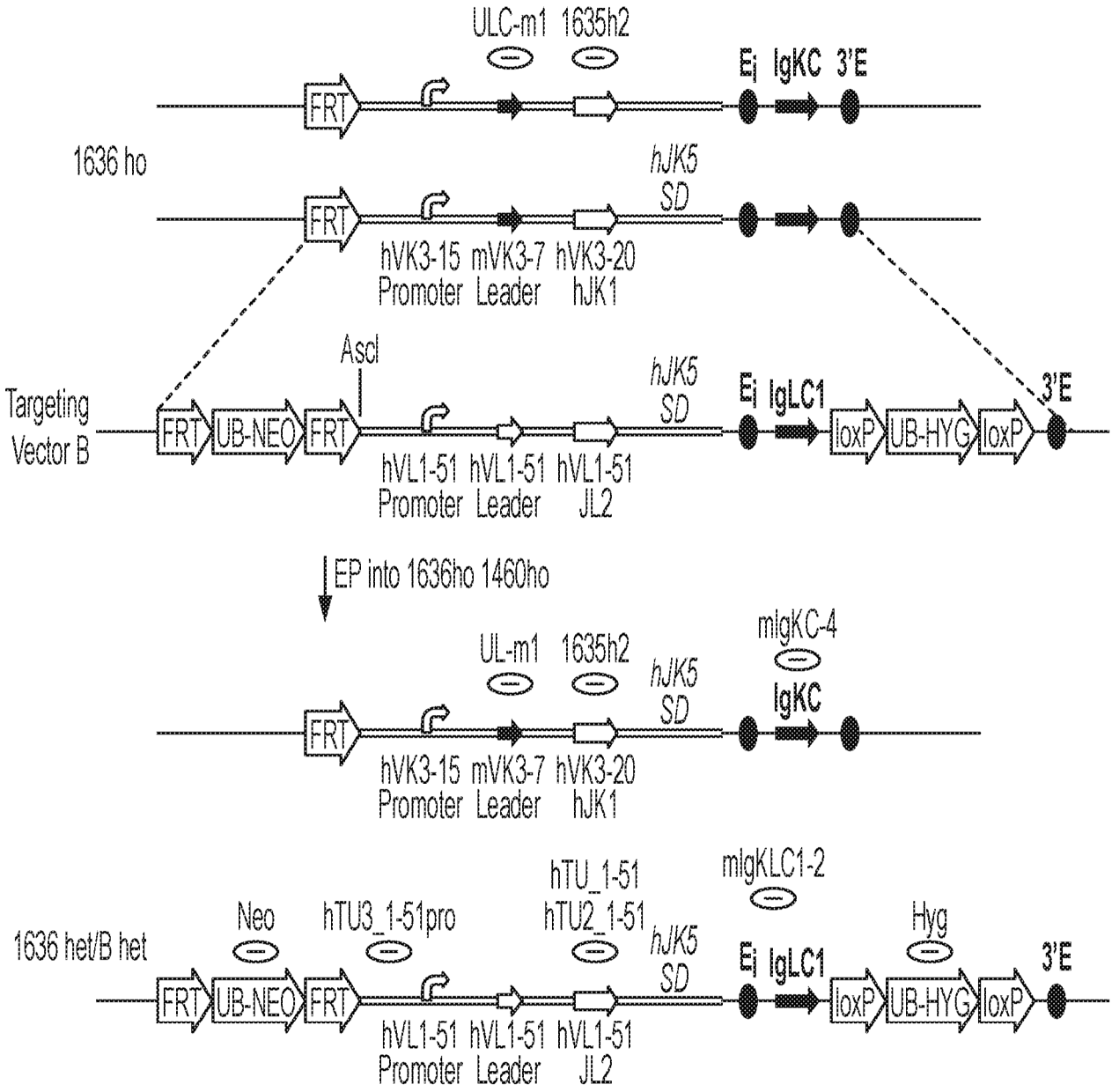
ULC-m1
1635h2
Ei
IgKC
3'E
FRT
1636 ho
hJK5
SD
hVK3-15
Promoter
mVK3-7
Leader
hVK3-20
hJK1
AscI
Targeting
Vector B
UB-NEO
hJK5
SD
Ei
IgLC1
loxP
UB-HYG
loxP
3'E
hVL1-51
Promoter
hVL1-51
Leader
hVL1-51
JL2
EP into 1636ho 1460ho
UL-m1
1635h2
mIgKC-4
IgKC
1636 het/B het
Neo
hTU3_1-51pro
hTU_1-51
hTU2_1-51
mIgKLC1-2
Hyg

Figure 4

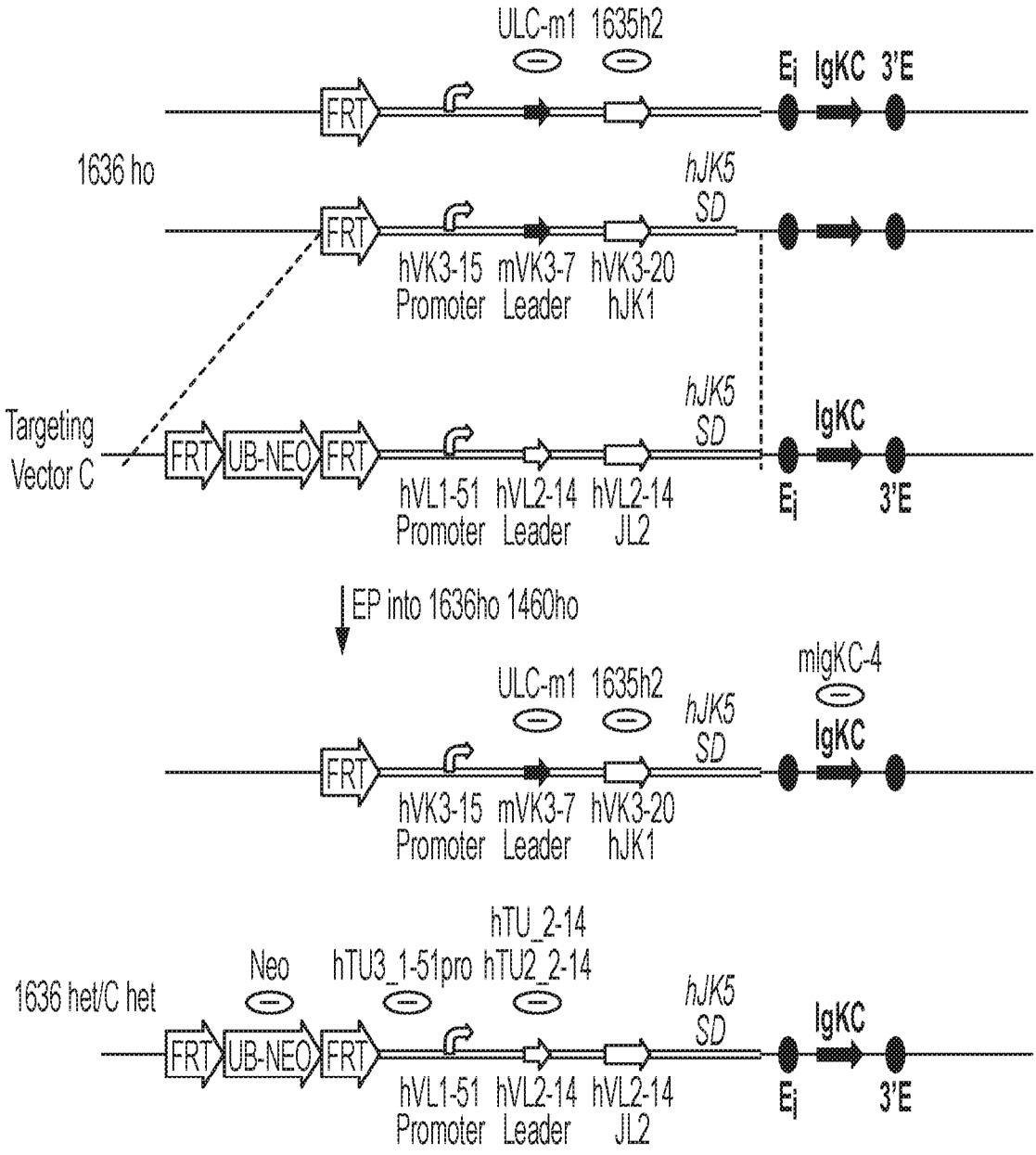
ULC-m1
1635h2
Ej
IgKC
3'E
1636 ho
FRT
hJK5
SD
hVK3-15
Promoter
mVK3-7
Leader
hVK3-20
hJK1
Targeting
Vector C
UB-NEO
hVL1-51
Promoter
hVL2-14
Leader
hVL2-14
JL2
EP into 1636ho 1460ho
migKC-4
1636 het/C het
Neo
hTU3_1-51pro
hTU2_2-14
hTU_2-14

Figure 5

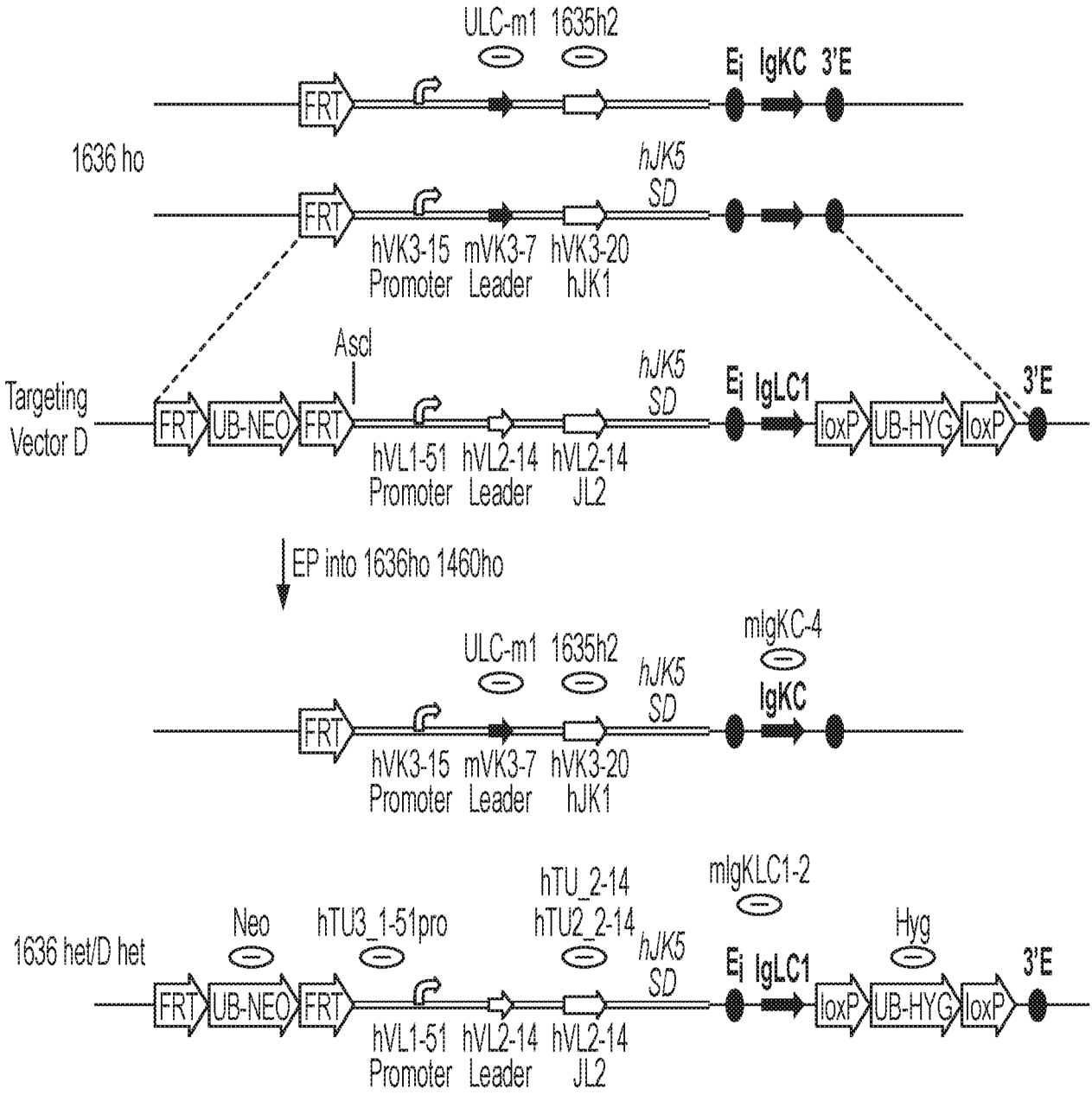
ULC-m1
1635h2
Ei
IgKC
3'E
FRT
1636 ho
hJK5
SD
hVK3-15
Promoter
mVK3-7
Leader
hVK3-20
hJK1
AscI
Targeting
Vector D
UB-NEO
hVL1-51
Promoter
hVL2-14
Leader
hVL2-14
JL2
IgLC1
loxP
UB-HYG
EP into 1636ho 1460ho
mIgKC-4
Neo
hTU3_1-51pro
hTU_2-14
hTU2_2-14
mIgKLC1-2
Hyg
1636 het/D het

Figure 6

Nucleotide Sequence of a Mouse Cκ (SEQ ID NO: 25):

GGGCTGATGCTGCACCAACTGTATCCATCTTCCCACCATCCAGTGAGCAGT
TAACATCTGGAGGTGCCTCAGTCGTGTGCTTCTTGAACAACTTCTACCCCA
AAGACATCAATGTCAAGTGGAAGATTGATGGCAGTGAACGACAAAATGGC
GTCCTGAACAGTTGGACTGATCAGGACAGCAAAGACAGCACCTACAGCAT
GAGCAGCACCCTCACGTTGACCAAGGACGAGTATGAACGACATAACAGCT
ATACCTGTGAGGCCACTCACAAGACATCAACTTCACCCATTGTCAAGAGCT
TCAACAGGAATGAGTGTTAGAGACAAAGGTCCTGAGACGCCACCACCAGCTC
CCCAGCTCCATCCTATCTTCCCTTCTAAGGTCTTGGAGGCTTCCCCACAAGCGA
CCTACCACTGTTGCGGTGCTCCAAACCTCCTCCCCACCTCCTTCTCCTCCTCCTC
CCTTTCCTTGGCTTTTATCATGCTAATATTTGCAGAAAATATTCAATAAAGTGAGT
CTTTGCACTTGA

Figure 7

Nucleotide Sequence of a Rat Cκ (SEQ ID NO: 27):

GGGCTGATGCTGCACCAACTGTATCTATCTTCCCACCATCCACGGAACAGT
TAGCAACTGGAGGTGCCTCAGTCGTGTGCCTCATGAACAACTTCTATCCCA
GAGACATCAGTGTCAAGTGGAAGATTGATGGCACTGAACGACGAGATGGT
GTCCTGGACAGTGTTACTGATCAGGACAGCAAAGACAGCACGTACAGCAT
GAGCAGCACCCTCTCGTTGACCAAGGCTGACTATGAAAGTCATAACCTCTA
TACCTGTGAGGTTGTTCATAAGACATCATCCTCACCCGTCGTCAAGAGCTT
CAACAGGAATGAGTGTTAGACCCAAAGGTCCTGAGGTGCCACCTGCTCCCCA
GCTCCTTCCAATCTTCCCTCCTAAGGTCTTGGAGACTTCCCCACAAGCGACCTA
CCACTGTTGCGGTGCTCCAAACCTCCTCCCCACCTCATCCTCCTTCCTTTCCTTG
GCTTTGATCATGCTAATATTTGGGGAATATTAAATAAAGTGAATCTTTGCACTTGA

Figure 8

Nucleotide Sequence of an Engineered Vλ1-51/Jλ2 Vector (SEQ ID NO: 31)

*GGCGCGCC*acctgcagtgtacacctgaggtgacatggttctgaacatcactttccccattgaaggcccgagtgacctatcacttgcttctcaaaattcaggaact
aggtgactctaggagagtgcacaggaagctttctgcatattctttcaagagatttcgaggtcactgactctttttcaagacttaaacacaaaatccacatccatcattcttg
cgtaaagagaccattctttttttttgagatggagtctcgctctgttgcccaagctggagtgcagtggcatgatctcggctcactgcaagctctgtcttctgggttcatgccc
ttctcctgcctcagcctcccaagtagctgggactacaggcacccgccgccatgcccggctaatttttgtatttttttagtggagatggggtttcaacatgttggccagaat
ggtcttgatctcttgacctcgtgatccacccgccttggcctcccaaagtgctgggattacaggtgtgagccactgcacccggcccaagatggggtttcatcatgttgac
ctggctggtctcaaactcccaacctcaagtgatccactcacttcagcctcccaaagtgctgggatgacaggcgtgagccacagtgcccggcctagtacattgtttaaat
ggtgcatgtaaaacctcatggtactacaactgcctggtgacagactcaccagagtaaataactatcctgctgttctccaaccacatgggattccccaaacaaagatttgtt
gagtccaagatgcatcatgccagaactcttgcagtcatacacataatttgtttcattttaataaatacggttatctttttcttcagtttattgtttttaatgtatcatcttctaggtttc
attacacatcaaagatgaataatttctctcatctttaggacatgctgaaaacactcattagtgattttgaacagtattatttcctaaacatcctagttggaatggttgatcctaaa
agctaccatgtgtcaggctcacctgagtgcagactgtggtctaaacaagctaaagttttaattcttccatcttcaaatacggagcatatttgcttgttttgctctttagcaaaa
cactgcaaagtcattcgccaggatctcctgcagactggcattcagtgatggagaacagactcctaggtgagatccctggtcacaggatccagatgactatgactgcaa

Figure 9A

Nucleotide Sequence of an Engineered Vλ1-51/Jλ2 Vector (SEQ ID NO: 31) (cont.)

gtctggaaaagaagagacagaacaaagatttaccagcataaccctctgagaatgtgccccagccatcctggagggaagagctccctattgacccag
cactgcagaatccacagaggaaggacagctctggccaccagggagcagccacacgacaagagaggacccggtgtccccacaggtgaggaaatg
agtccatggggctggtcagtgctctcgatttcattctgccataacaggactttgtgtagtcaccacctgagtcctatacagtgaacagccaaggagacat
ggacagattcacccctgaggaacccagtagaatgtgaagtctgccctgaggtcacgaagaaaagactcgggggggctgcctggcctggccctgatg
gaggggggccatggacagaacaacggggaggcaggggtgtctctgagaggctctggtcaccttgtcatacaatggtggtgtacaatgtcgcaccatg
gacactagggggcgcctgcgcaccattcctgagaagactgggtgtgatgagagcaggaccagcgccacctgtcctgcttggtgccctatgcttagg
gctcacagatgtcaactctccacccccctgggaccacacagccccacccctggcactctctgacatcctcaggcagaggagcttgacccagggccca
gggtgggatcagaaagctggagggtctgatttgcatggatggaccctccttctctcagagtataaagaggggcagggagagacttggggaagctctg
cttcagctg***TGAGCGCAGAAGGCAGGACTCGGGACAATCTTCATC***<u>*ATG*</u>ACCTGCTCCCCTCTCCTC
CTCACCCTTCTCATTCACTGCACAG**gtgcccagacacagggtcaggggaggggtccaggaagcccatgaggccctgctt**
tctccttctctctctagaccaagaatcaccgtgtctgtgtctctcctgcttccag

Figure 9B

Nucleotide Sequence of an Engineered Vλ1-51/Jλ2 Vector (SEQ ID NO: 31) (cont.)

GGTCCTGGGCCCAGTCTGTGTTGACGCAGCCGCCCTCAGTGTCTGCGGCCCCAGGA
CAGAAGGTCACCATCTCCTGCTCTGGAAGCAGCTCCAACATTGGGAATAATTATGTAT
CCTGGTACCAGCAGCTCCCAGGAACAGCCCCCAAACTCCTCATTTATGACAATAATAA
GCGACCCTCAGGGATTCCTGACCGATTCTCTGGCTCCAAGTCTGGCACGTCAGCCAC
CCTGGGCATCACCGGACTCCAGACTGGGGACGAGGCCGATTATTACTGCGGAACATG
GGATAGCAGCCTGAGTGCTGTGGTATTCGGCGGAGGGACCAAGCTGACCGTCCTAG*gt*
aagtaatttttcactattgtcttctgaaatttgggtctgatggccagtattgacttttagaggcttaaataggagtttggtaaagattggtaaatgagggc
atttaagatttgccatgggttgcaaaagttaaactcagcttcaaaaatggatttggagaaaaaaagattaaattgctctaaactgaatgacacaaa
gtaaaaaaaaaaaagtgtaactaaaaaggaacccttgtatttctaaggagcaaaagtaaatttatttttgttcactcttgccaaatattgtattggttgtt
gctgattatgcatgatacagaaaagtggaaaaatacatttttagtctttctccctttgtttgataaattattttgtcagacaacaataaaaatcaatag
cacgccctaagaTGCCATTTCATTACCTCTTTCTCCGCACCCGACATAGAT

Figure 9C

Nucleotide Sequence of a Rearranged Vλ1-51/Jλ2 Variable Region Including a Vλ1-51 Intron (SEQ ID NO: 32):

*ATG*ACCTGCTCCCCTCTCCTCCTCACCCTTCTCATTCACTGCACAG**gtgcccagacacagggtcagggg**
aggggtccaggaagcccatgaggccctgctttctccttctctctctagaccaaagaatcaccgtgtctgtgtctctcctgcttccagGGTCC
TGGGCCCAGTCTGTGTTGACGCAGCCGCCCTCAGTGTCTGCGGCCCCAGGACAGAA
GGTCACCATCTCCTGCTCTGGAAGCAGCTCCAACATTGGGAATAATTATGTATCCTGG
TACCAGCAGCTCCCAGGAACAGCCCCCAAACTCCTCATTTATGACAATAATAAGCGAC
CCTCAGGGATTCCTGACCGATTCTCTGGCTCCAAGTCTGGCACGTCAGCCACCCTGG
GCATCACCGGACTCCAGACTGGGGACGAGGCCGATTATTACTGCGGAACATGGGATA
GCAGCCTGAGTGCTGTGGTATTCGGCGGAGGGACCAAGCTGACCGTCCTAG

Figure 10

Nucleotide Sequence of a Rearranged Vλ1-51/Jλ2 Variable Region Without a Vλ1-51 Intron (SEQ ID NO: 33):

*ATG*ACCTGCTCCCCTCTCCTCCTCACCCTTCTCATTCACTGCACAGGGTCCTGGGCCCAGTC
TGTGTTGACGCAGCCGCCCTCAGTGTCTGCGGCCCCAGGACAGAAGGTCACCATCTCCTGC
TCTGGAAGCAGCTCCAACATTGGGAATAATTATGTATCCTGGTACCAGCAGCTCCCAGGAAC
AGCCCCCAAACTCCTCATTTATGACAATAATAAGCGACCCTCAGGGATTCCTGACCGATTCT
CTGGCTCCAAGTCTGGCACGTCAGCCACCCTGGGCATCACCGGACTCCAGACTGGGGACG
AGGCCGATTATTACTGCGGAACATGGGATAGCAGCCTGAGTGCTGTGGTATTCGGCGGAGG
GACCAAGCTGACCGTCCTAG

Figure 11

Amino Acid Sequence of a Rearranged Vλ1-51/Jλ2 Variable Domain Including a Signal Peptide (SEQ ID NO: 34):

MTCSPLLLTLLIHCTGSWAQSVLTQPPSVSAAPGQKVTISCSGSSSNIGNNYVSWYQQLPGTAPK LLIYDNNKRPSGIPDRFSGSKSGTSATLGITGLQTGDEADYYCGTWDSSLSAVVFGGGTKLTVL

Figure 12

Nucleotide Sequence of an Engineered Vλ2-14/Jλ2 Vector (SEQ ID NO: 36):

*GGCGCGCC*acctgcagtgtacacctgaggtgacatggttctgaacatcactttccccattgaaggcccgagtgacctatcacttgcttctcaaaatt
caggaactaggtgactctaggagagtgcacaggaagctttctgcatattctttcaagagatttcgaggtcactgactctttttcaagacttaaacacaaaat
ccacatccatcattcttgcgtaaagagaccattctttttttttgagatggagtctcgctctgttgcccaagctggagtgcagtggcatgatctcggctcactg
caagctctgtcttctgggttcatgcccttctcctgcctcagcctcccaagtagctgggactacaggcacccgccgccatgcccggctaatttttgtatttttt
agtggagatggggtttcaacatgttggccagaatggtcttgatctcttgacctcgtgatccacccgccttggcctcccaaagtgctgggattacaggtgtg
agccactgcacccggcccaagatggggtttcatcatgttgacctggctggtctcaaactcccaacctcaagtgatccactcacttcagcctcccaaagtg
ctgggatgacaggcgtgagccacagtgcccggcctagtacattgtttaaatggtgcatgtaaaacctcatggtactacaactgcctggtgacagactcac
cagagtaaataactatcctgctgttctccaaccacatgggattccccaaacaaagatttgttgagtccaagatgcatcatgccagaactcttgcagtcatac
acataatttgtttcattttaataaatacggttatctttttttcttcagtttattgtttttaatgtatcatcttctaggtttcattacacatcaaagatgaataatttctctcatc
tttaggacatgctgaaaacactcattagtgattttgaacagtattatttcctaaacatcctagttggaatggttgatcctaaaagctaccatgtgtcaggctcac
ctgagtgcagactgtggtctaaacaagctaaagttttaattcttccatcttcaaatacggagcatatttgcttgttttgctctttagcaaaacactgcaaagtcat
tcgccaggatctcctgcagactggcattcagtgatggagaacagactcctaggtgagatccctggtcacaggatccagatgactatgactgcaa

Figure 13A

Nucleotide Sequence of an Engineered Vλ2-14/Jλ2 Vector (SEQ ID NO: 36)(cont.)

gtctggaaaagaagagacagaacaaagatttaccagcataaccctctgagaatgtgccccagccatcctggagggaagagctccctattgacccag
cactgcagaatccacagaggaaggacagctctggccaccagggagcagccacacgacaagagaggacccggtgtccccacaggtgaggaaatg
agtccatggggctggtcagtgctctcgatttcattctgccataacaggactttgtgtagtcaccacctgagtcctatacagtgaacagccaaggagacat
ggacagattcacccctgaggaacccagtagaatgtgaagtctgccctgaggtcacgaagaaaagactcgggggctgcctggcctggccctgatg
gaggggccatggacagaacaacggggaggcaggggtgtctctgagaggctctggtcaccttgtcatacaatggtggtgtacaatgtcgcaccatg
gacactagggggcgcctgcgcaccattcctgagaagactgggtgtgatgagagcaggaccagcgccacctgtcctgcttggtgccctatgcttagg
gctcacagatgtcaactctccacccccctgggaccacacagccccacccctggcactctctgacatcctcaggcagaggagcttgacccagggccca
gggtgggatcagaaagctggagggtctgatttgcatggatggaccctccttctctcagagtataaagaggggcagggagagacttggggaagctctg
cttcagctg***TGAGCGCAGAAGGCAGGACTCGGGACAATCTTCATC***<u>*ATG*</u>GCCTGGGCTCTGCTGCT
CCTCACCCTCCTCACTCAGGGCACAG**gtgacgcctccagggaaggggcttcagggacctctgggctgatccttggtctc**
ctgctcctcaggctcaccggggcccagcactgactcactggcatgtgtttctccctctttccag

Figure 13B

Nucleotide Sequence of an Engineered Vλ2-14/Jλ2 Vector (SEQ ID NO: 36)(cont.)

GGTCCTGGGCCCAGTCTGCCCTGACTCAGCCTGCCTCCGTGTCTGGGTCTCCTGGAC
AGTCGATCACCATCTCCTGCACTGGAACCAGCAGTGACGTTGGTGGTTATAACTATGT
CTCCTGGTACCAACAGCACCCAGGCAAAGCCCCCAAACTCATGATTTATGAGGTCAGT
AATCGGCCCTCAGGGGTTTCTAATCGCTTCTCTGGCTCCAAGTCTGGCAACACGGCC
TCCCTGACCATCTCTGGGCTCCAGGCTGAGGACGAGGCTGATTATTACTGCAGCTCAT
ATACAAGCAGCAGCACTCTCGTGGTATTCGGCGGAGGGACCAAGCTGACCGTCCTAG

gtaagtaatttttcactattgtcttctgaaatttgggtctgatggccagtattgacttttagaggcttaaataggagtttggtaaagattggtaaatgagg
gcatttaagatttgccatgggttgcaaaagttaaactcagcttcaaaaatggatttggagaaaaaaagattaaattgctctaaactgaatgacaca
aagtaaaaaaaaaaaagtgtaactaaaaaggaacccttgtatttctaaggagcaaaagtaaatttatttttgttcactcttgccaaatattgtattggtt
gttgctgattatgcatgatacagaaaagtggaaaaatacatttttagtctttctccctttgtttgataaattattttgtcagacaacaataaaaatcaat
agcacgccctaagaTGCCATTTCATTACCTCTTTCTCCGCACCCGACATAGAT

Figure 13C

Nucleotide Sequence of a Rearranged Vλ2-14/Jλ2 Variable Region Including a Vλ2-14 Intron (SEQ ID NO: 37):

*ATG*GCCTGGGCTCTGCTGCTCCTCACCCTCCTCACTCAGGGCACAG**gtgacgcctccagggaaggggct tcagggacctctgggctgatccttggtctcctgctcctcaggctcaccggggcccagcactgactcactggcatgtgtttctcccctctttccag**G**GTCCTGGGCCCAGTCTGCCCTGACTCAGCCTGCCTCCGTGTCTGGGTCTCCTGGACA GTCGATCACCATCTCCTGCACTGGAACCAGCAGTGACGTTGGTGGTTATAACTATGTC TCCTGGTACCAACAGCACCCAGGCAAAGCCCCCAAACTCATGATTTATGAGGTCAGTA ATCGGCCCTCAGGGGTTTCTAATCGCTTCTCTGGCTCCAAGTCTGGCAACACGGCCT CCCTGACCATCTCTGGGCTCCAGGCTGAGGACGAGGCTGATTATTACTGCAGCTCATA TACAAGCAGCAGCACTCTCGTGGTATTCGGCGGAGGGACCAAGCTGACCGTCCTAG**

Figure 14

Nucleotide Sequence of a Rearranged Vλ2-14/Jλ2 Variable Region Without a Vλ2-14 Intron (SEQ ID NO: 38):

*ATG*GCCTGGGCTCTGCTGCTCCTCACCCTCCTCACTCAGGGCACAGGGTCCTGGGCCCAGT
CTGCCCTGACTCAGCCTGCCTCCGTGTCTGGGTCTCCTGGACAGTCGATCACCATCTCCTGC
ACTGGAACCAGCAGTGACGTTGGTGGTTATAACTATGTCTCCTGGTACCAACAGCACCCAG
GCAAAGCCCCCAAACTCATGATTTATGAGGTCAGTAATCGGCCCTCAGGGGTTTCTAATCGC
TTCTCTGGCTCCAAGTCTGGCAACACGGCCTCCCTGACCATCTCTGGGCTCCAGGCTGAGG
ACGAGGCTGATTATTACTGCAGCTCATATACAAGCAGCAGCACTCTCGTGGTATTCGGCGGA
GGGACCAAGCTGACCGTCCTAG

Figure 15

Amino Acid Sequence of a Rearranged Vλ2-14/Jλ2 Variable Domain Including a Signal Peptide (SEQ ID NO: 39):

MAWALLLLTLLTQGTGSWAQSALTQPASVSGSPGQSITISCTGTSSDVGGYNYVSWYQQHPGK APKLMIYEVSNRPSGVSNRFSGSKSGNTASLTISGLQAEDEADYYCSSYTSSSTLVVFGGGTKLT VL

Figure 16