(12) INTERNATIONAL APPLICATION PUBLISHED UNDER THE PATENT COOPERATION TREATY (PCT)

(19) World Intellectual Property Organization
International Bureau

(43) International Publication Date
19 December 2024 (19.12.2024)

WIPO | PCT

(10) International Publication Number
WO 2024/257081 A3

(51) International Patent Classification:
H01J 37/09 (2006.01) *H01J 33/04* (2006.01)
H01J 37/18 (2006.01) *H01J 37/20* (2006.01)
H01J 37/244 (2006.01) *G01Q 30/08* (2010.01)

(21) International Application Number:
PCT/IL2024/050449

(22) International Filing Date:
09 May 2024 (09.05.2024)

(25) Filing Language: English

(26) Publication Language: English

(30) Priority Data:
18/332,969 12 June 2023 (12.06.2023) US

(71) Applicant: **AIRSEM TECHNOLOGIES LTD.** [IL/IL]; Derech Meir Weisgal 2, 7632605 Rehovot (IL).

(72) Inventors: **SHKLOVSKY, Jenny**; 8 Kalanin, Apt. 1, Kfar Saba (IL). **BEKER, Peter**; 8 Zeidman, Apt. 29, Kiryat Ono (IL). **WAINSTEIN, Vladimir**; 10/10 Carmel Street, Rishon Le Zion (IL).

(74) Agent: **COLB, Sanford T.** et al.; SANFORD T. COLB & CO., 4 Shaar Hagai Street, P.O. Box 1653, 7611502 Rehovot (IL).

(81) Designated States *(unless otherwise indicated, for every kind of national protection available)*: AE, AG, AL, AM, AO, AT, AU, AZ, BA, BB, BG, BH, BN, BR, BW, BY, BZ, CA, CH, CL, CN, CO, CR, CU, CV, CZ, DE, DJ, DK, DM, DO, DZ, EC, EE, EG, ES, FI, GB, GD, GE, GH, GM, GT, HN, HR, HU, ID, IL, IN, IQ, IR, IS, IT, JM, JO, JP, KE, KG, KH, KN, KP, KR, KW, KZ, LA, LC, LK, LR, LS, LU, LY, MA, MD, MG, MK, MN, MU, MW, MX, MY, MZ, NA, NG, NI, NO, NZ, OM, PA, PE, PG, PH, PL, PT, QA, RO, RS, RU, RW, SA, SC, SD, SE, SG, SK, SL, ST, SV, SY, TH, TJ, TM, TN, TR, TT, TZ, UA, UG, US, UZ, VC, VN, WS, ZA, ZM, ZW.

(84) Designated States *(unless otherwise indicated, for every kind of regional protection available)*: ARIPO (BW, CV, GH, GM, KE, LR, LS, MW, MZ, NA, RW, SC, SD, SL, ST, SZ, TZ, UG, ZM, ZW), Eurasian (AM, AZ, BY, KG, KZ, RU, TJ, TM), European (AL, AT, BE, BG, CH, CY, CZ, DE, DK, EE, ES, FI, FR, GB, GR, HR, HU, IE, IS, IT, LT, LU, LV, MC, ME, MK, MT, NL, NO, PL, PT, RO, RS, SE, SI, SK, SM, TR), OAPI (BF, BJ, CF, CG, CI, CM, GA, GN, GQ, GW, KM, ML, MR, NE, SN, TD, TG).

Published:
— *with international search report (Art. 21(3))*

(54) Title: CHARGED PARTICLE BEAM DEVICES AND MEMBRANE ASSEMBLIES USEFUL THEREIN

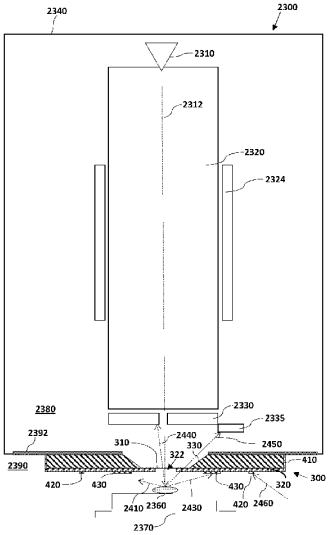

FIG. 10

(57) Abstract: A charged particle beam device, comprising a charged particle beam source situated in a first-pressure environment, a sample support operative to support a sample situated in a second-pressure environment, the second-pressure environment having a higher pressure than the first-pressure environment, and a membrane assembly separating the first-pressure environment from the second-pressure environment, the membrane assembly comprising a pres sure- sealing membrane being substantially transparent to a charged particle beam from the charged particle beam source, a supporting membrane layer being formed with a cornerless aperture, the pressure-sealing membrane being bonded to the supporting membrane layer, and a holding frame being formed with a second aperture larger than and overlying the comerless aperture. The charged particle beam device may further comprise an electron-detecting subassembly, the electron-detecting subassembly comprising at least one metal line defining a shape, for detection of electrons resulting from an interaction of the charged particle beam and the sample.

WO 2024/257081 A3

[Continued on next page]

(88) Date of publication of the international search report:
23 January 2025 (23.01.2025)