(12) INTERNATIONAL APPLICATION PUBLISHED UNDER THE PATENT COOPERATION TREATY (PCT)

(19) World Intellectual Property Organization
International Bureau

(43) International Publication Date
1 November 2007 (01.11.2007)

PCT

(10) International Publication Number
WO 2007/123486 A1

(51) International Patent Classification:
G11B 21/02 (2006.01) *G11B 5/55* (2006.01)

(21) International Application Number:
PCT/SG2006/000105

(22) International Filing Date: 26 April 2006 (26.04.2006)

(25) Filing Language: English

(26) Publication Language: English

(71) Applicant *(for all designated States except US)*: **AGENCY FOR SCIENCE, TECHNOLOGY & RESEARCH** [SG/SG]; 20 Biopolis Way, #07-01 Centros, Singapore 138668 (SG).

(72) Inventors; and

(75) Inventors/Applicants *(for US only)*: **BI, Chao** [SG/SG]; Block 124, Jurong East Street 13, #24-17, Singapore 600124 (SG). **JIANG, Quan** [CN/SG]; 1 Bukit Batok Street 25, #05-10, Singapore 658882 (SG). **LING, Song** [CN/SG]; Block 656, Choa Chu Kang Crescent, #13-29, Singapore 680656 (SG).

(74) Agent: **ALBAN TAY MAHTANI & DE SILVA**; 39 Robinson Road, #07-01 Robinson Point, Singapore 068911 (SG).

(81) Designated States *(unless otherwise indicated, for every kind of national protection available)*: AE, AG, AL, AM, AT, AU, AZ, BA, BB, BG, BR, BW, BY, BZ, CA, CH, CN, CO, CR, CU, CZ, DE, DK, DM, DZ, EC, EE, EG, ES, FI, GB, GD, GE, GH, GM, HR, HU, ID, IL, IN, IS, JP, KE, KG, KM, KN, KP, KR, KZ, LC, LK, LR, LS, LT, LU, LV, LY, MA, MD, MG, MK, MN, MW, MX, MZ, NA, NG, NI, NO, NZ, OM, PG, PH, PL, PT, RO, RU, SC, SD, SE, SG, SK, SL, SM, SY, TJ, TM, TN, TR, TT, TZ, UA, UG, US, UZ, VC, VN, YU, ZA, ZM, ZW.

(84) Designated States *(unless otherwise indicated, for every kind of regional protection available)*: ARIPO (BW, GH, GM, KE, LS, MW, MZ, NA, SD, SL, SZ, TZ, UG, ZM, ZW), Eurasian (AM, AZ, BY, KG, KZ, MD, RU, TJ, TM), European (AT, BE, BG, CH, CY, CZ, DE, DK, EE, ES, FI, FR, GB, GR, HU, IE, IS, IT, LT, LU, LV, MC, NL, PL, PT, RO, SE, SI, SK, TR), OAPI (BF, BJ, CF, CG, CI, CM, GA, GN, GQ, GW, ML, MR, NE, SN, TD, TG).

Declaration under Rule 4.17:
— *of inventorship (Rule 4.17(iv))*

Published:
— *with international search report*

[Continued on next page]

(54) Title: VOICE COIL MOTOR

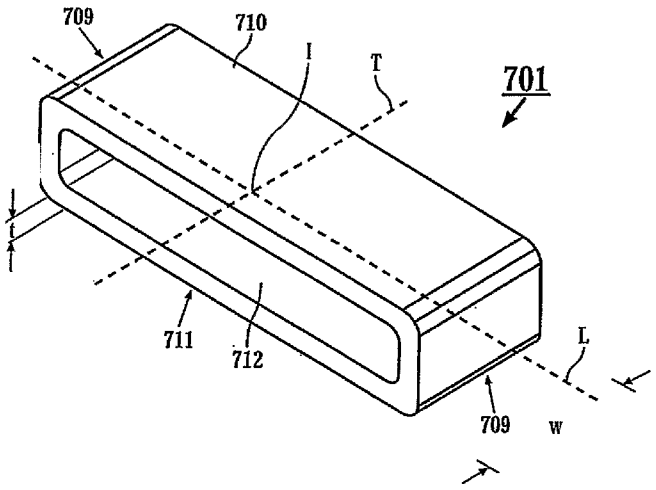

(57) Abstract: A voice coil motor has an arm for arcuate movement about a pivot, and a coil at one end of the arm. There is a permanent magnet mounted adjacent the coil. The permanent magnet has only one pole facing, and for operational co-operation with, the coil. The coil has a centre of mass and a geometric centre. The center of mass and the geometric centre are coincident. The coil is mounted to the arm perpendicular to a movement plane of the arm for the arcuate movement.

WO 2007/123486 A1

For two-letter codes and other abbreviations, refer to the "Guidance Notes on Codes and Abbreviations" appearing at the beginning of each regular issue of the PCT Gazette.