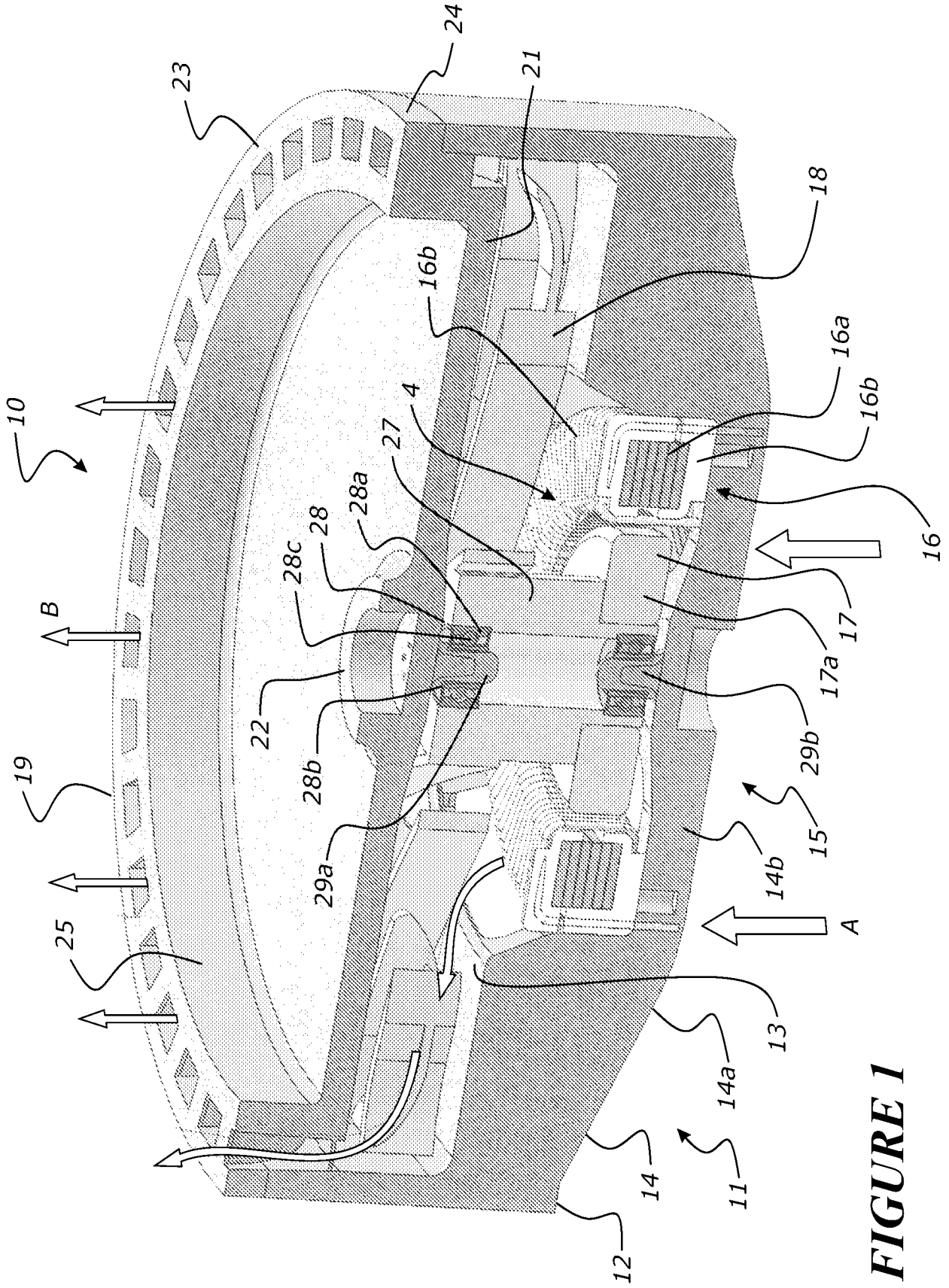
10
11
12
13
14
14a
14b
15
16
16a
16b
17
17a
18
19
21
22
23
24
25
27
28
28a
28b
28c
29a
29b
4
A
B

FIGURE 1

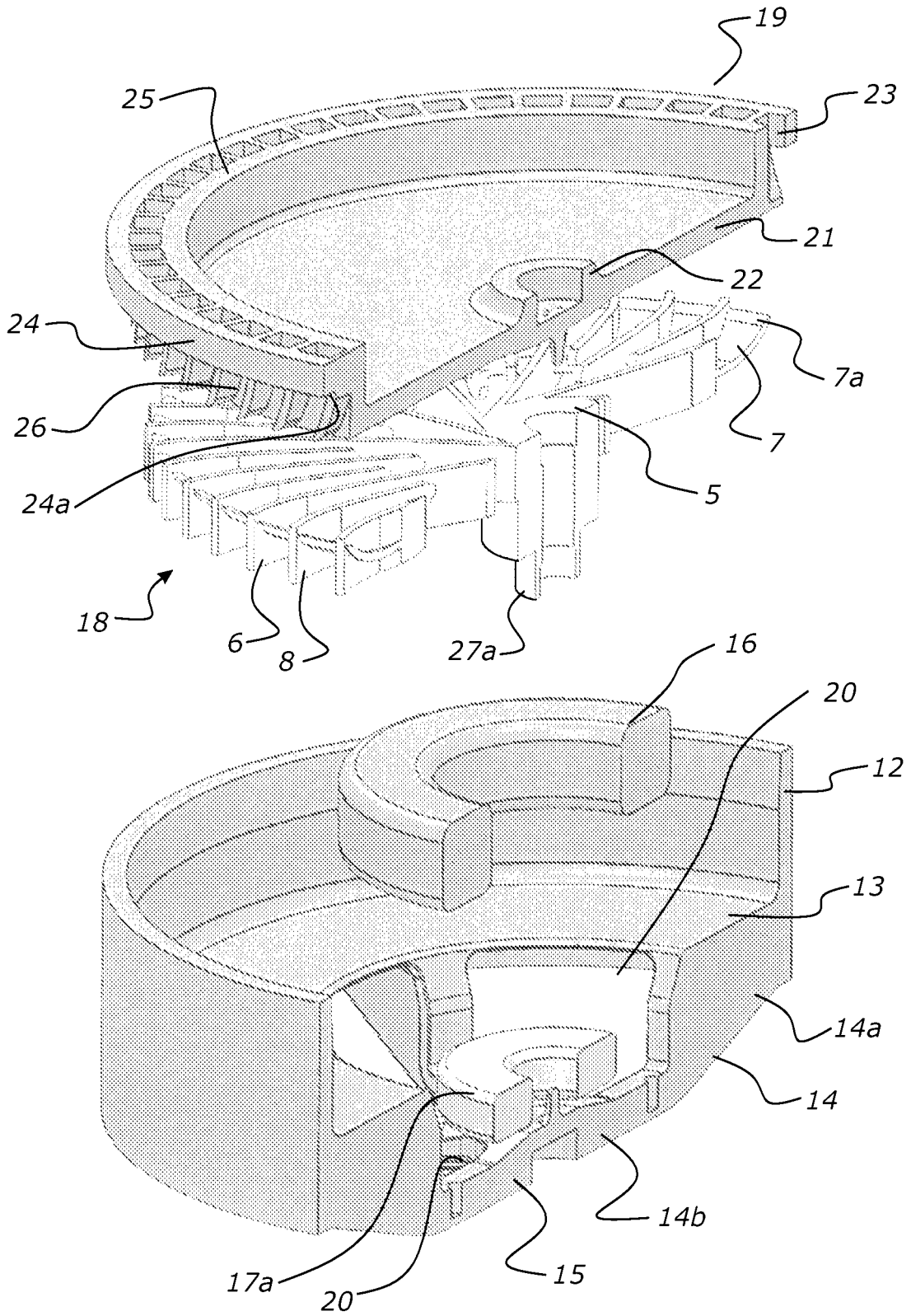
19
25
23
21
22
24
7a
26
7
5
24a
18
6
8
27a
16
20
12
13
14a
14
14b
17a
20
15

FIGURE 2

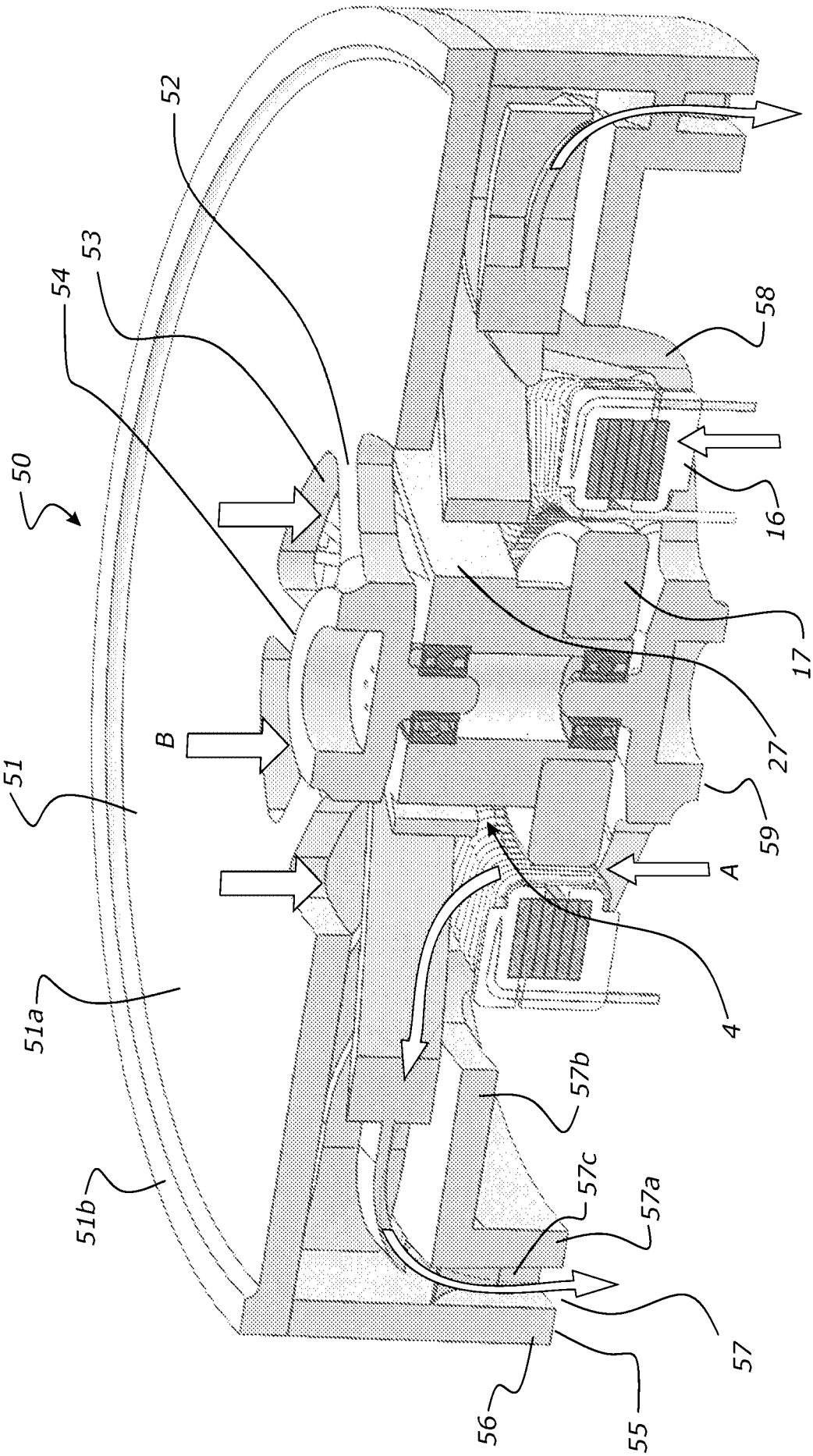

FIGURE 3

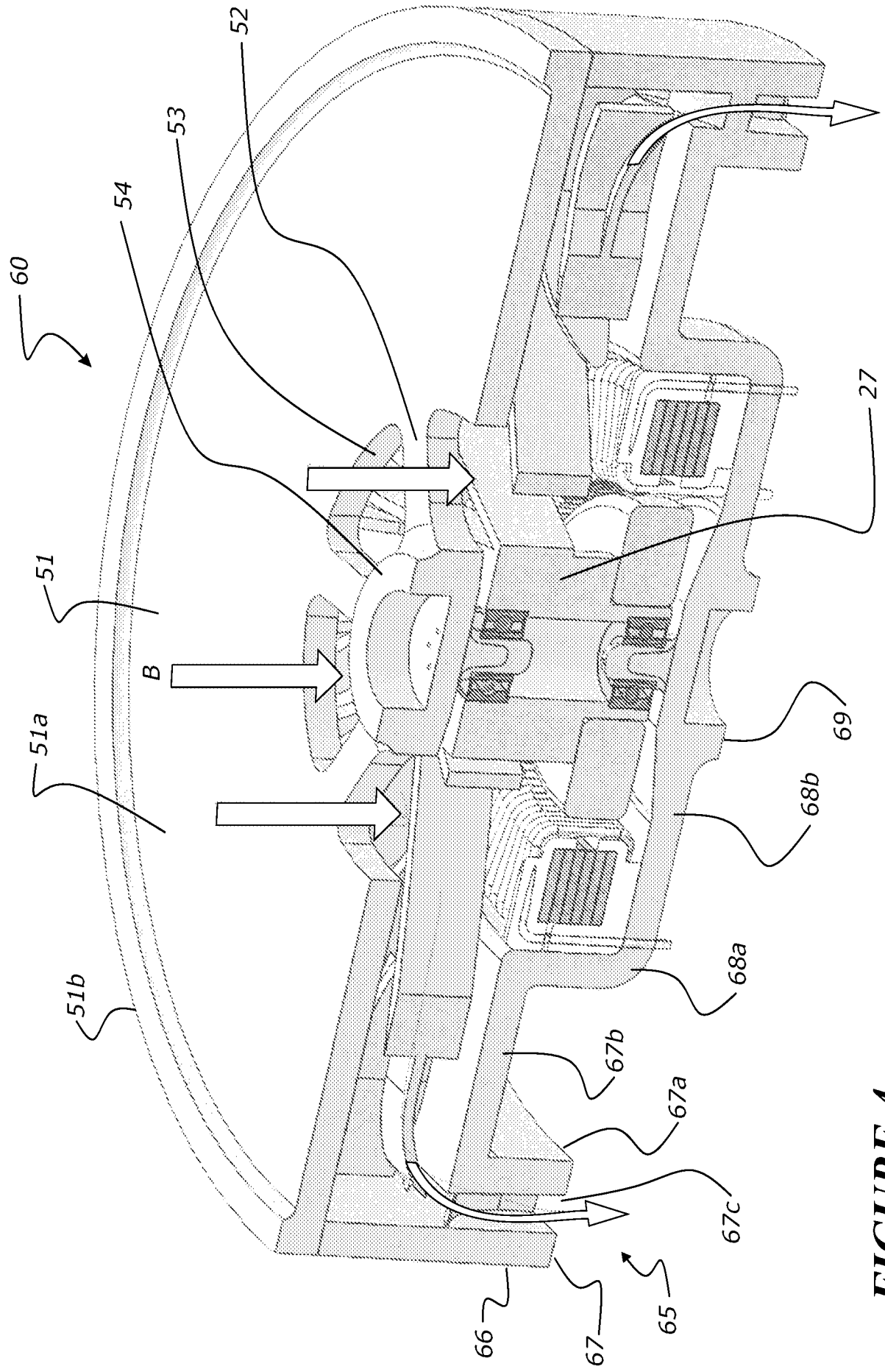

FIGURE 4

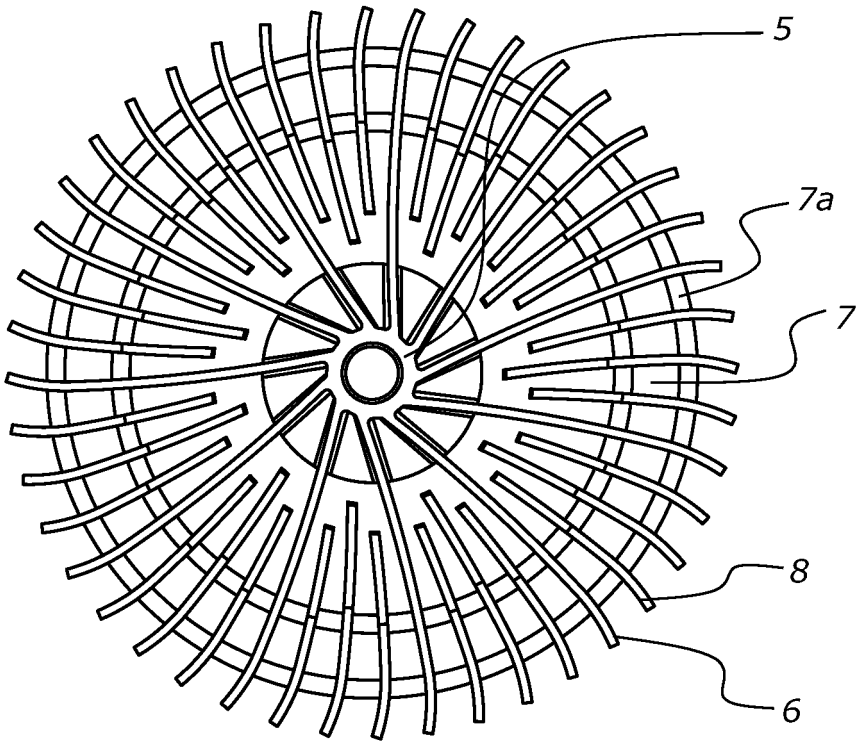

FIGURE 5

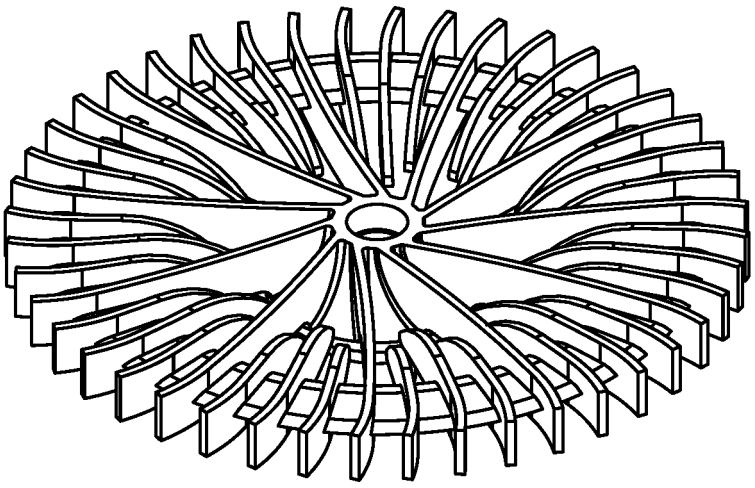

FIGURE 6

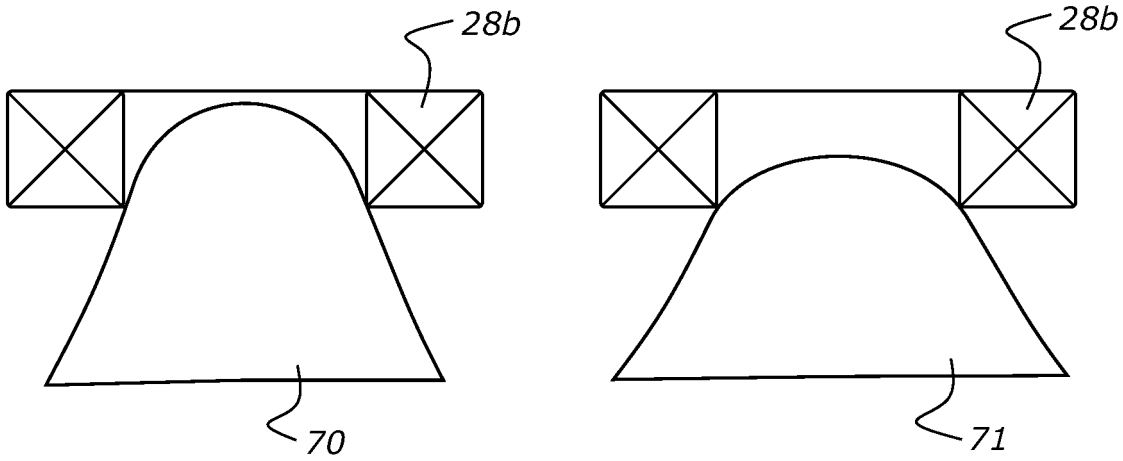

FIGURE 7

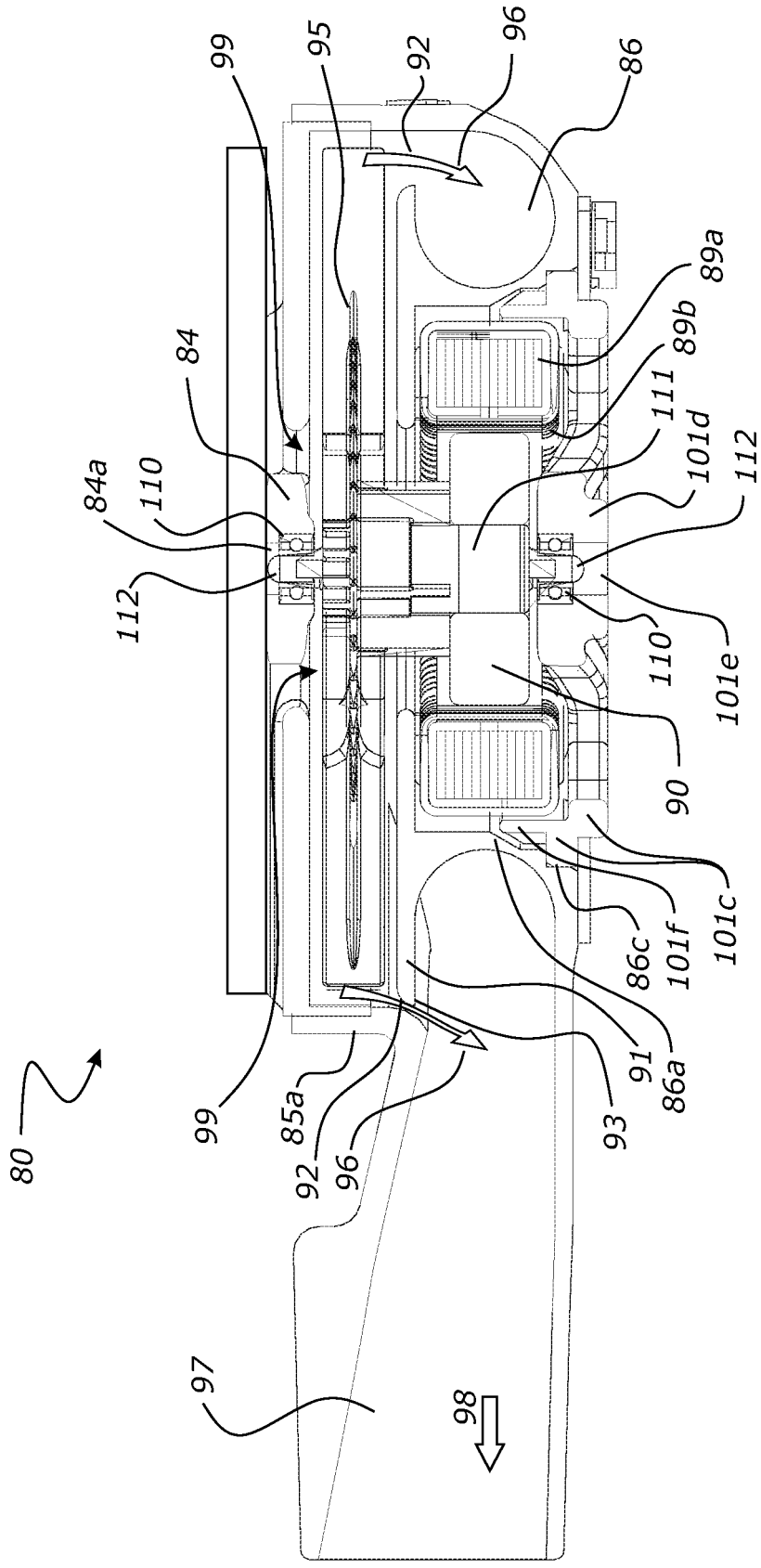
80
99
85a
92
96
97
98
93
91
86a
86c
101f
101c
90
110
101e
112
111
101d
89b
89a
84
84a
110
112
99
95
92
96
86

FIGURE 8

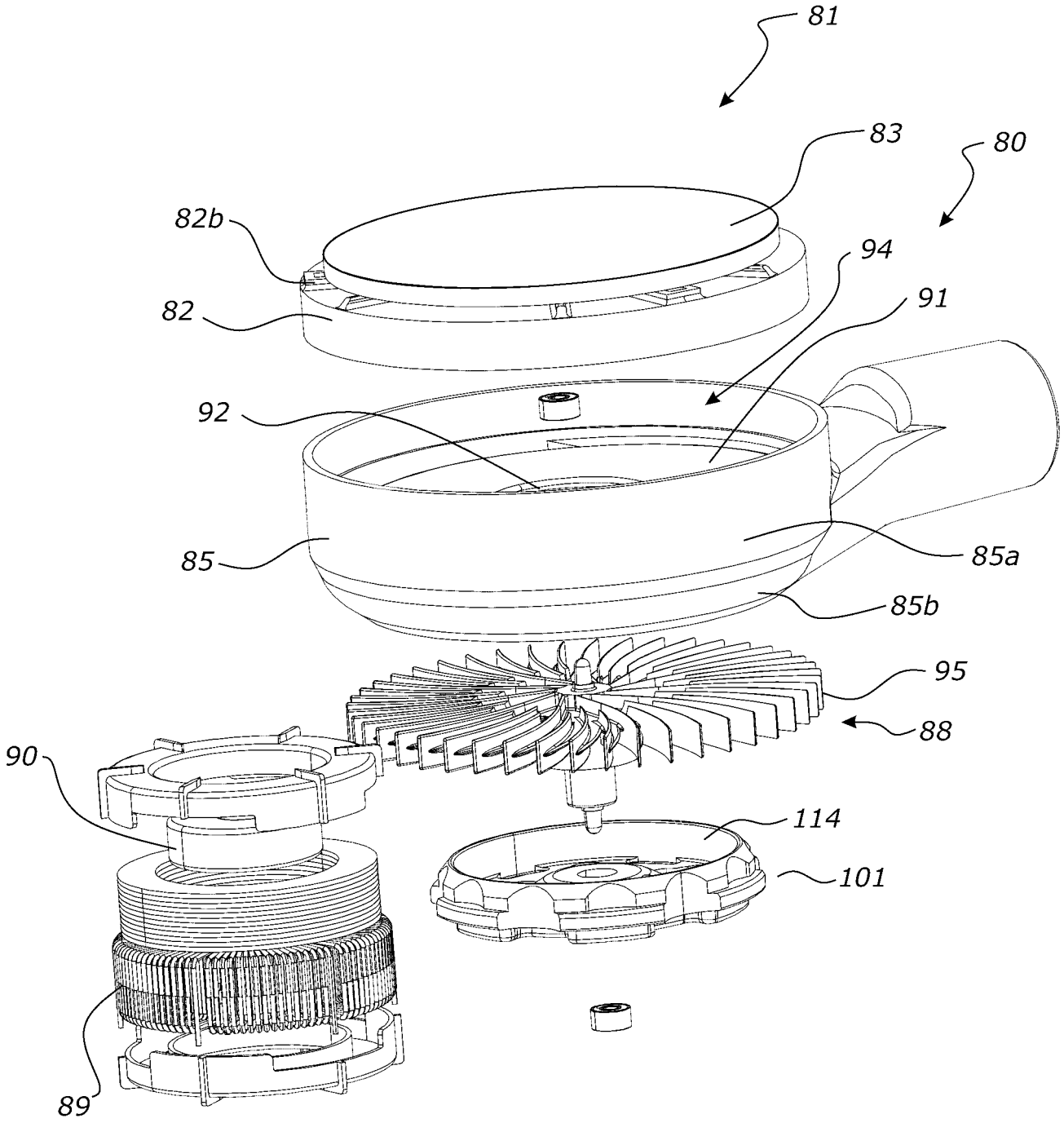

FIGURE 9

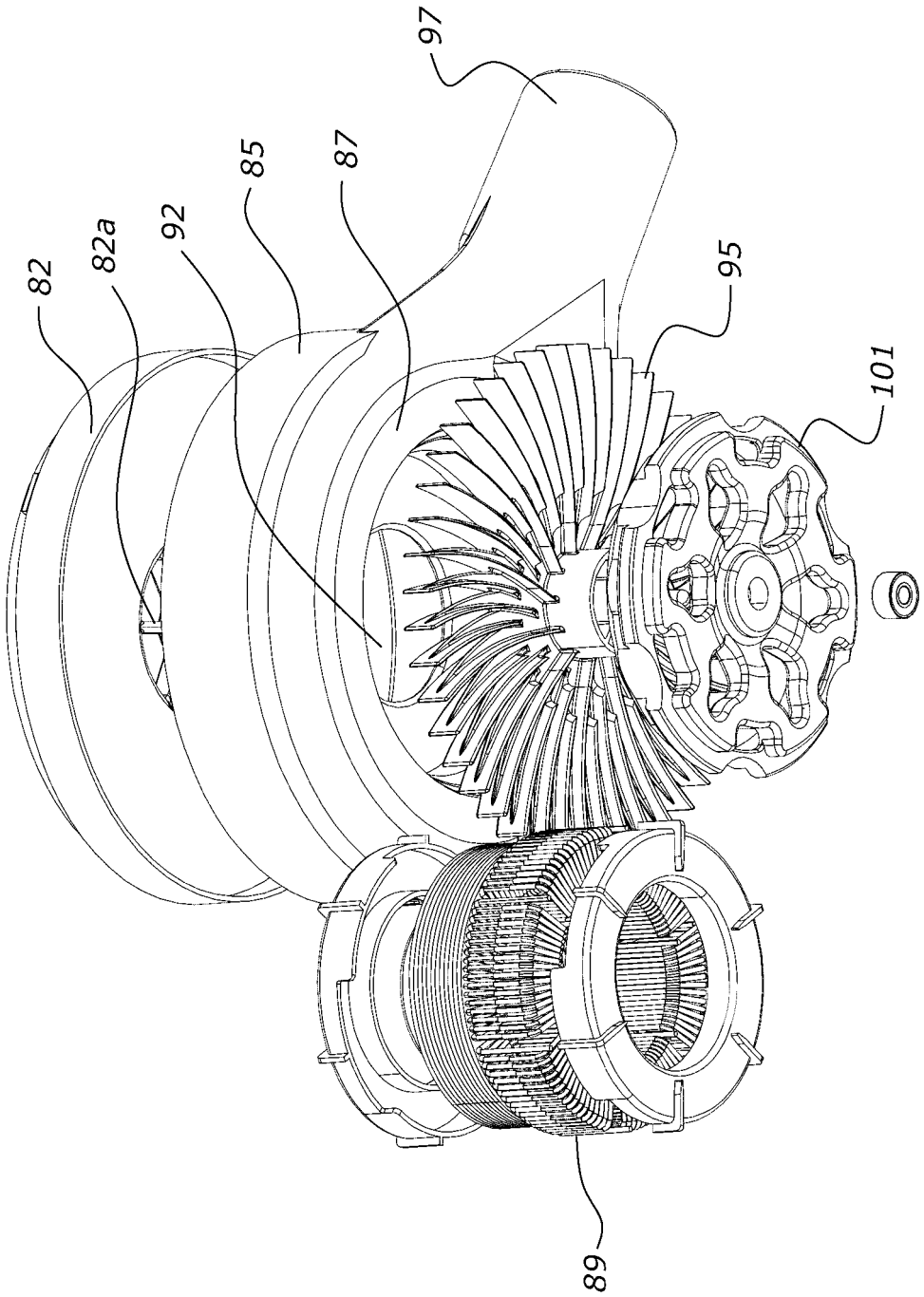

FIGURE 10

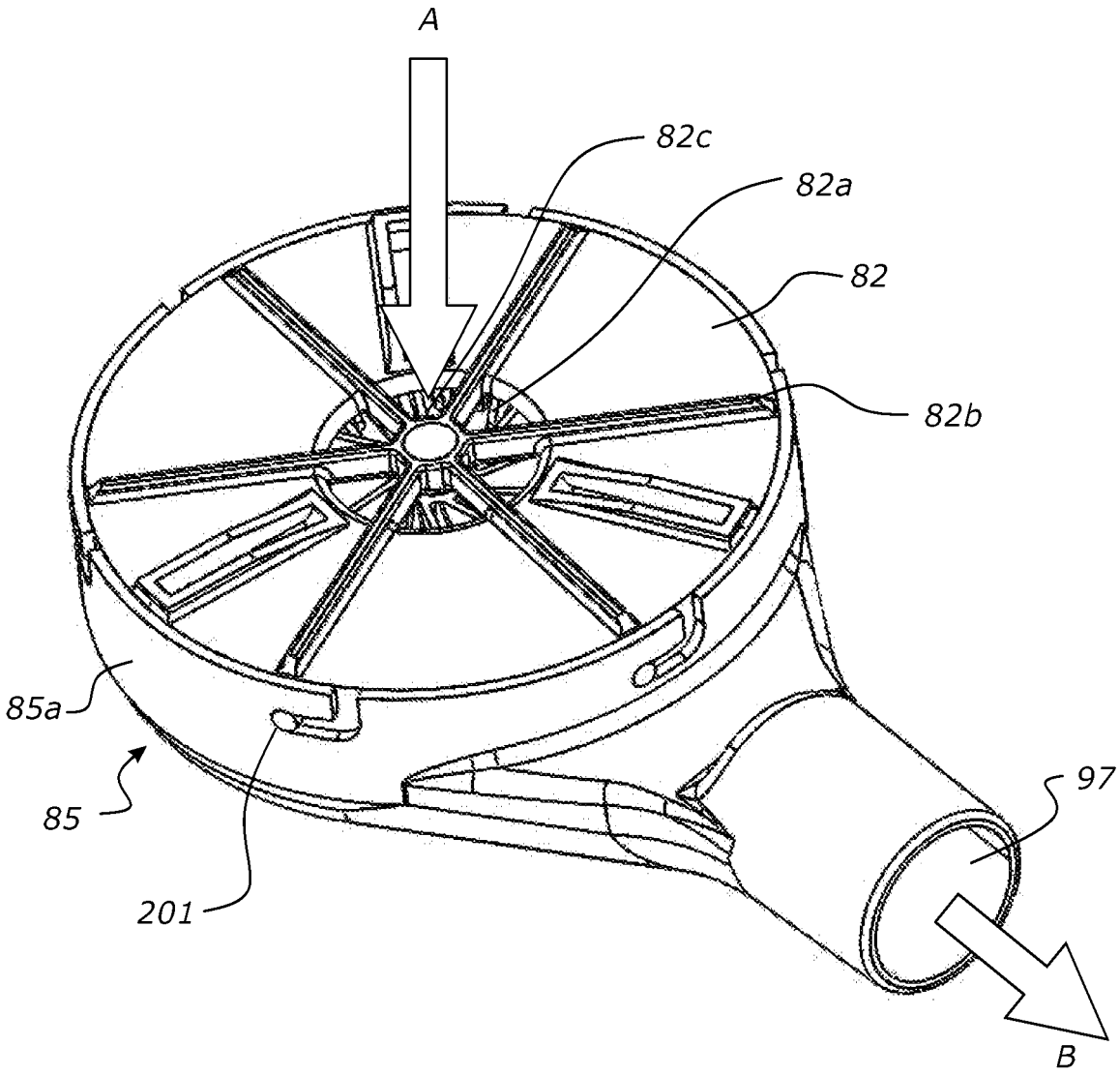

FIGURE 11

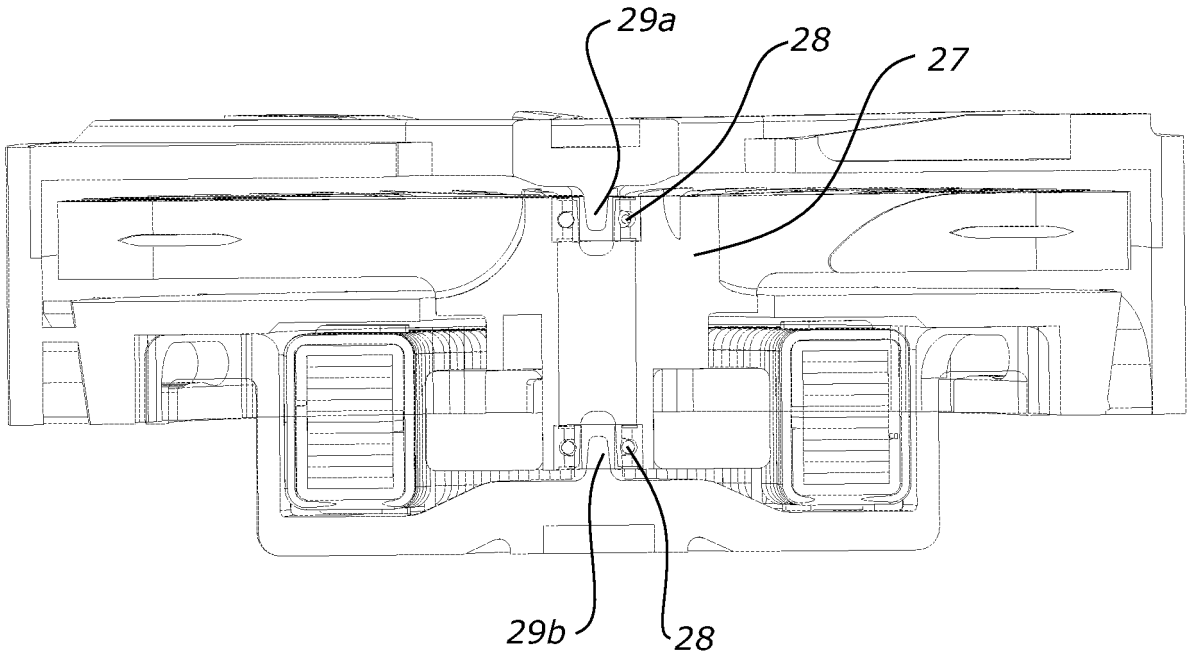

FIGURE 12A

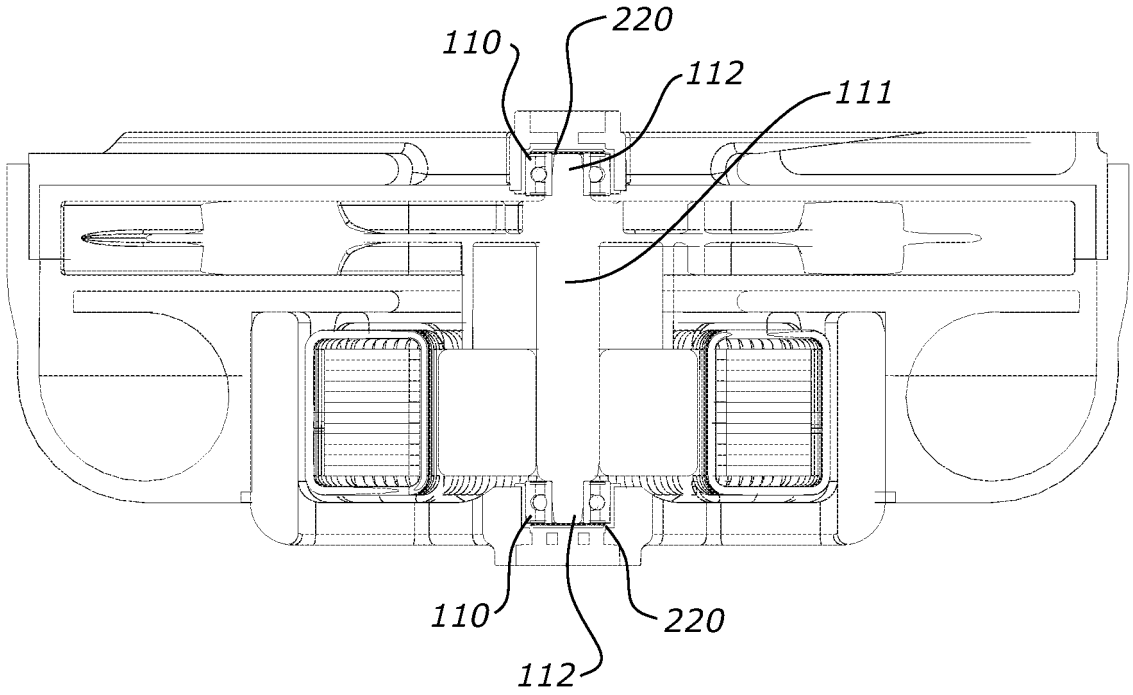

FIGURE 12B

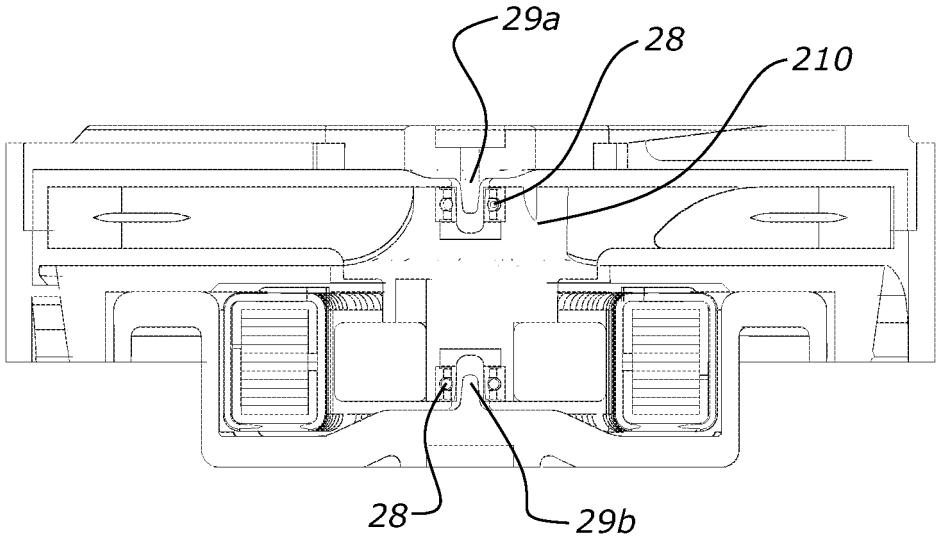

FIGURE 12C

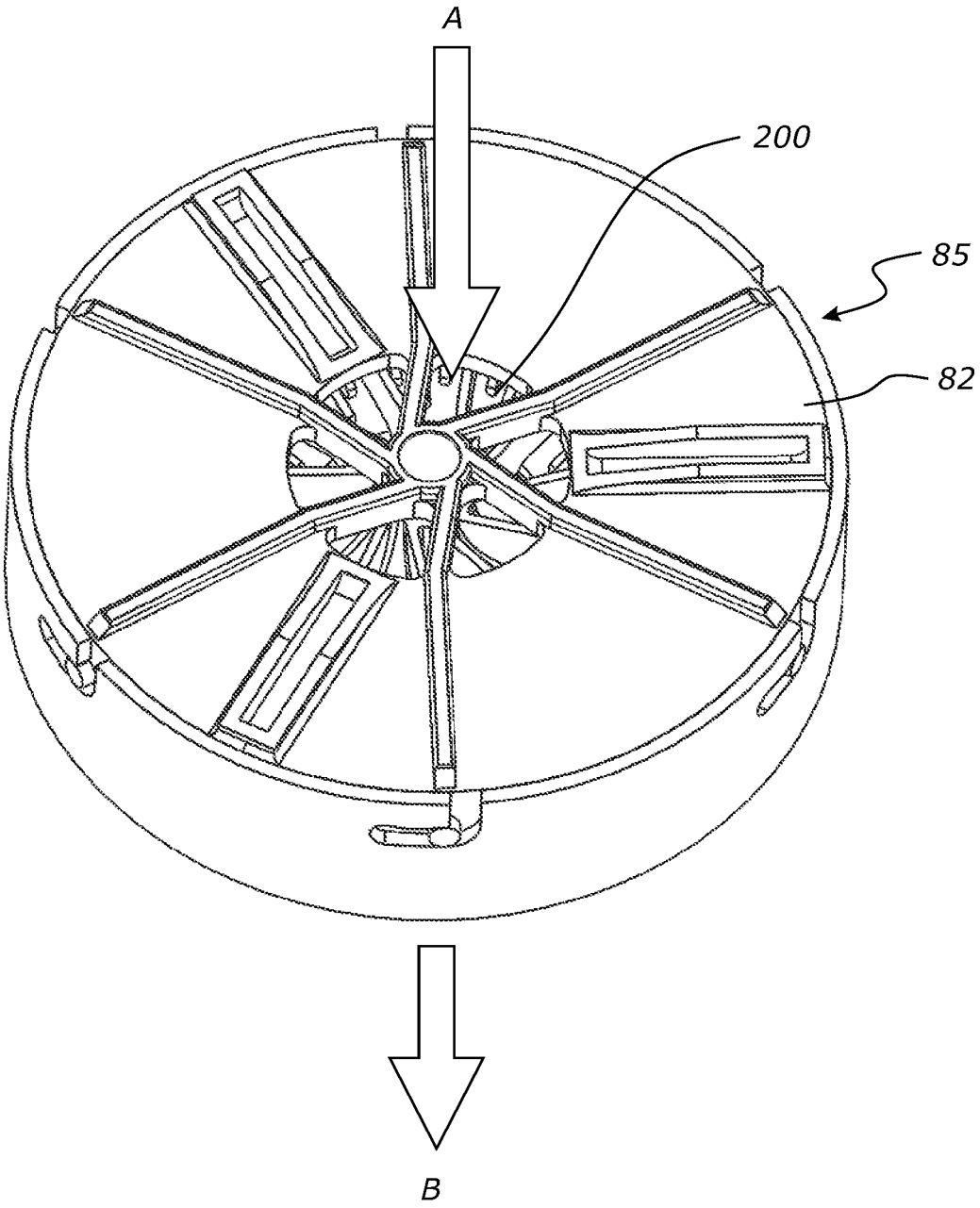

FIGURE 13A

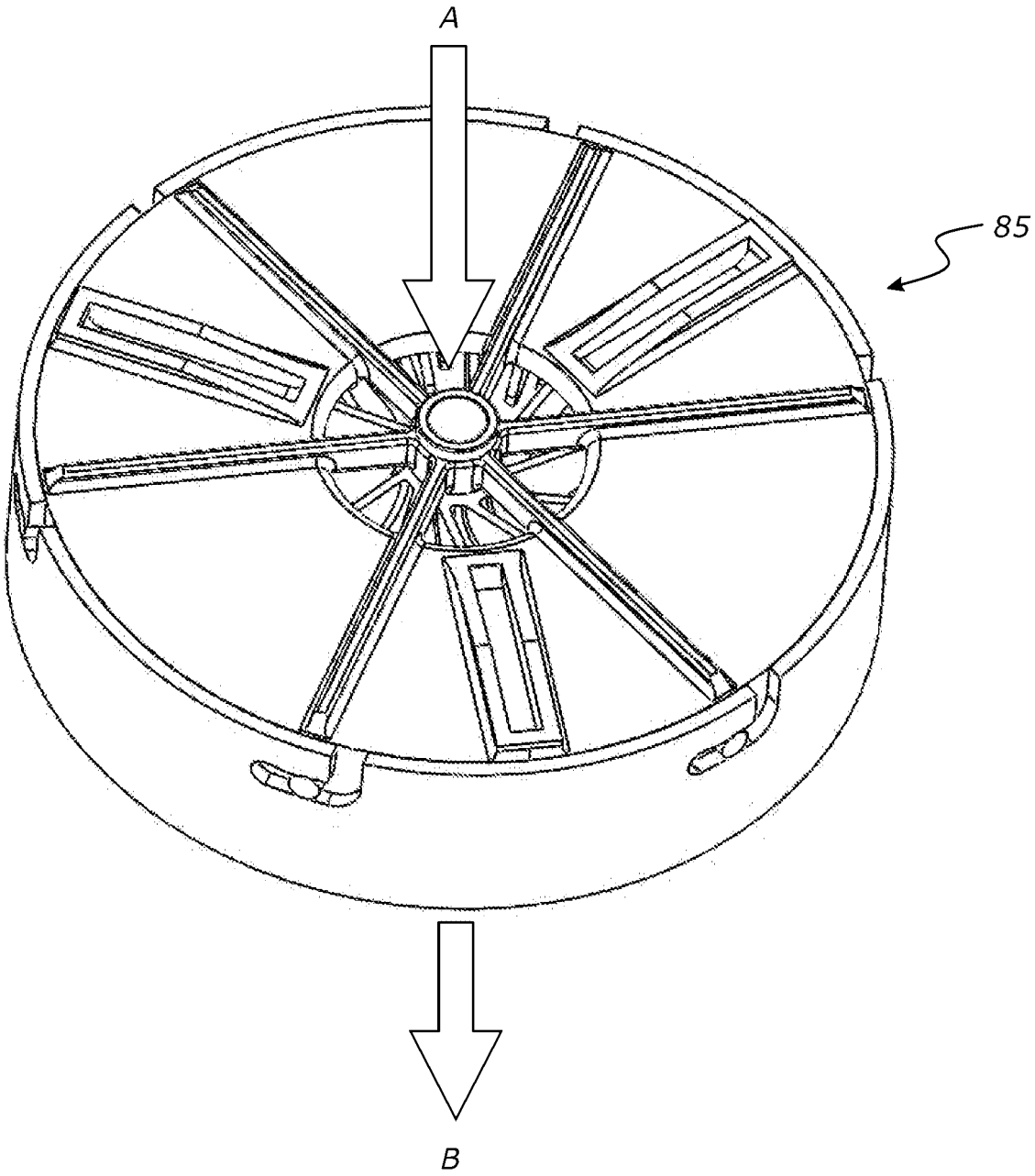

FIGURE 13B

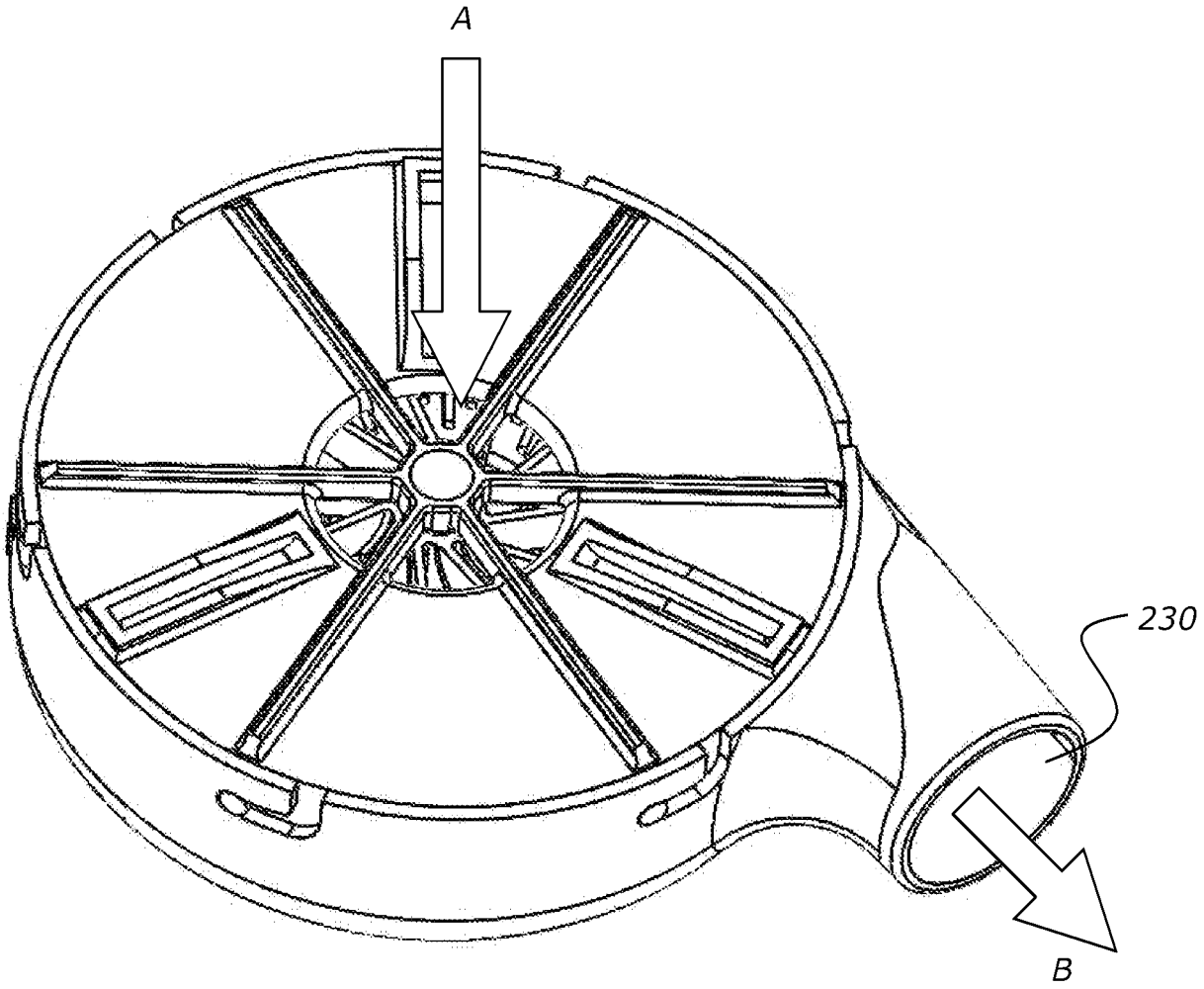

FIGURE 13C