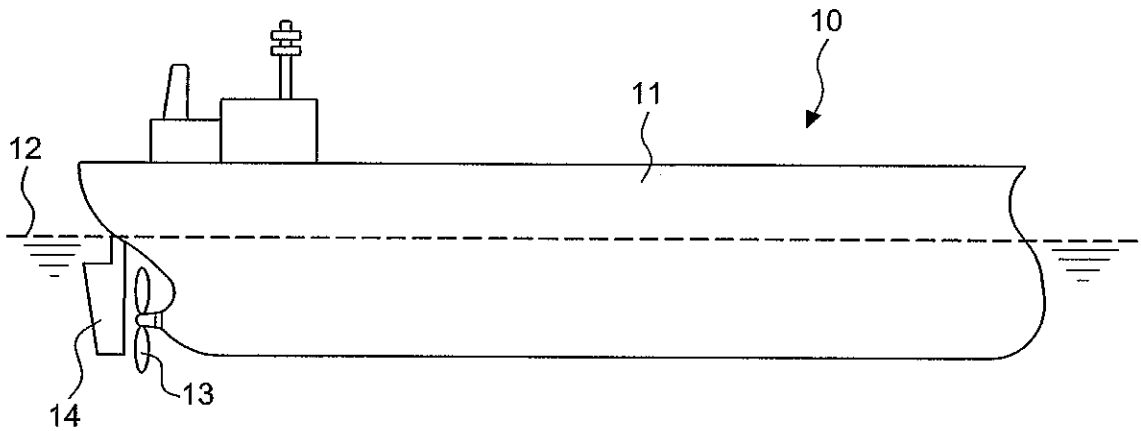

FIG.1
PRIOR ART

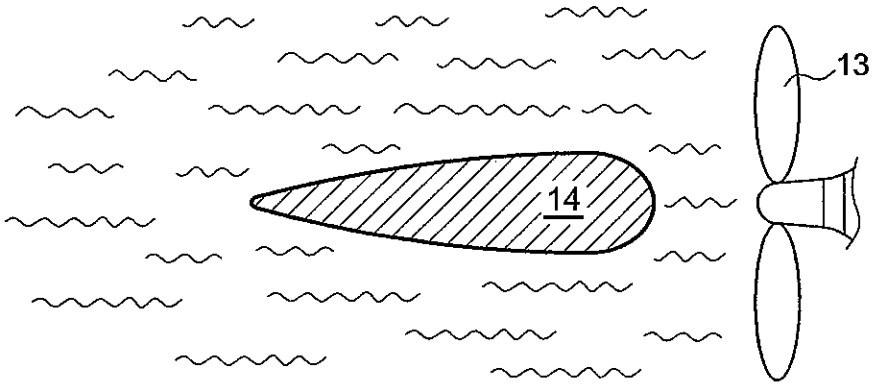

FIG.2
PRIOR ART

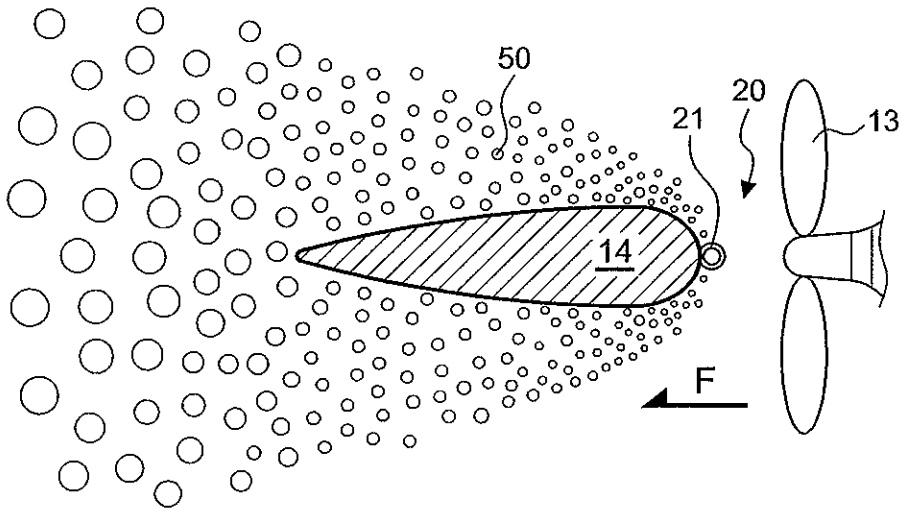

FIG.3

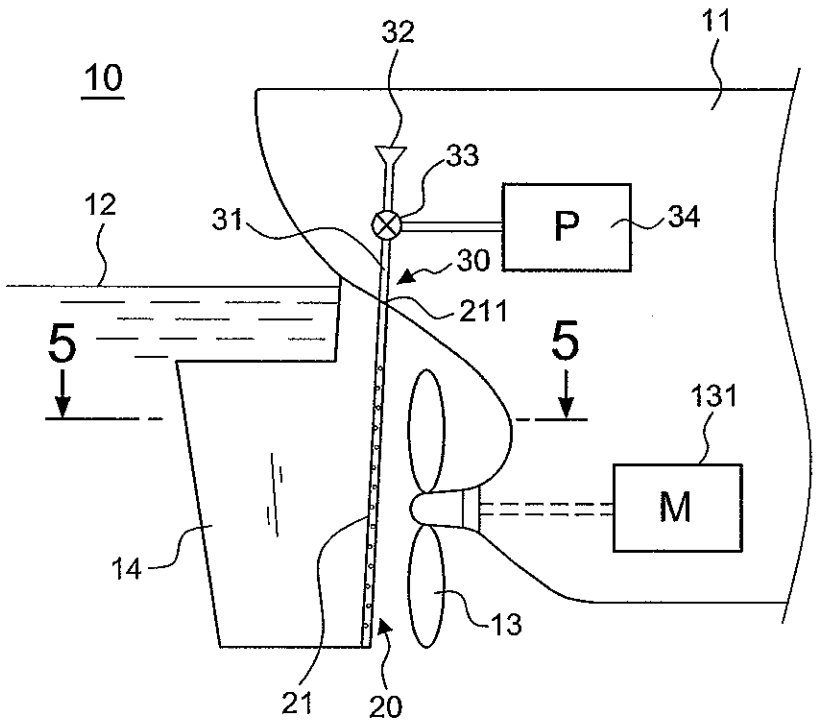

FIG.4

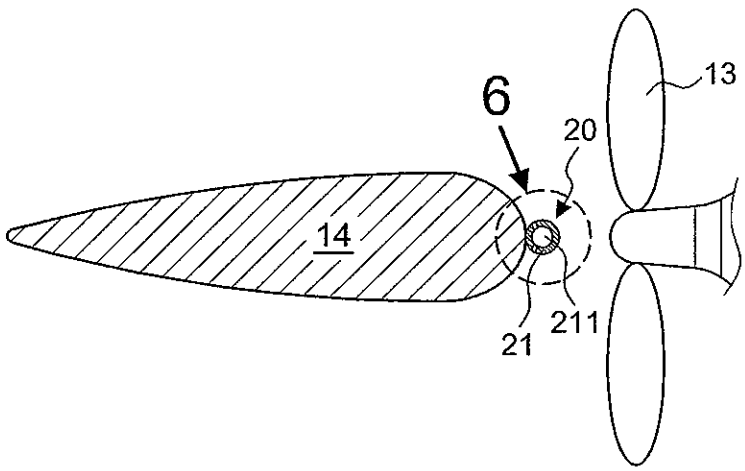

FIG.5

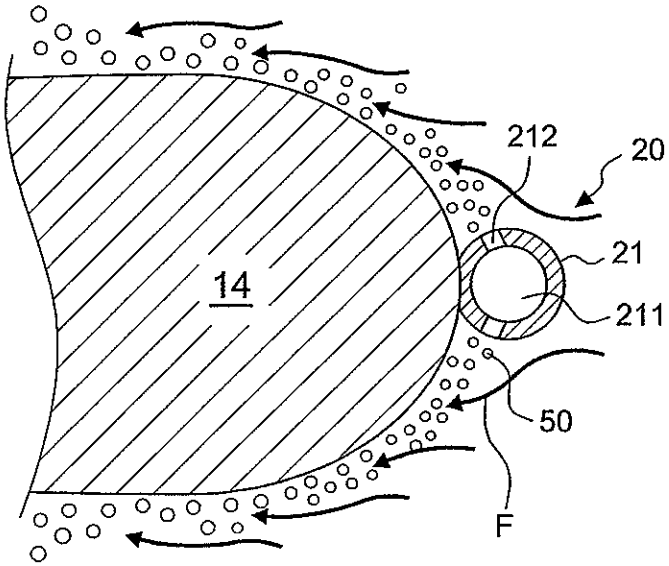

FIG.6

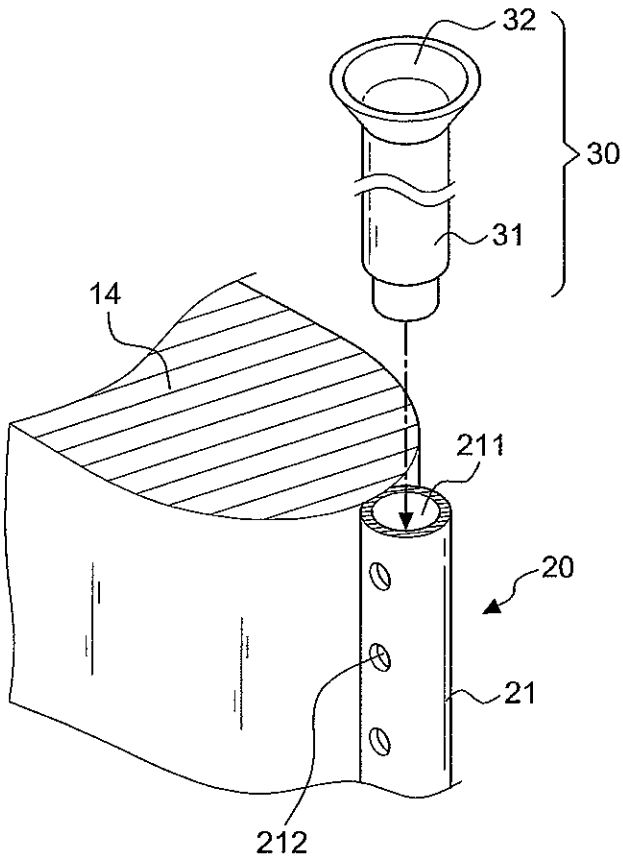

FIG.7