Fig. 1: Block diagram

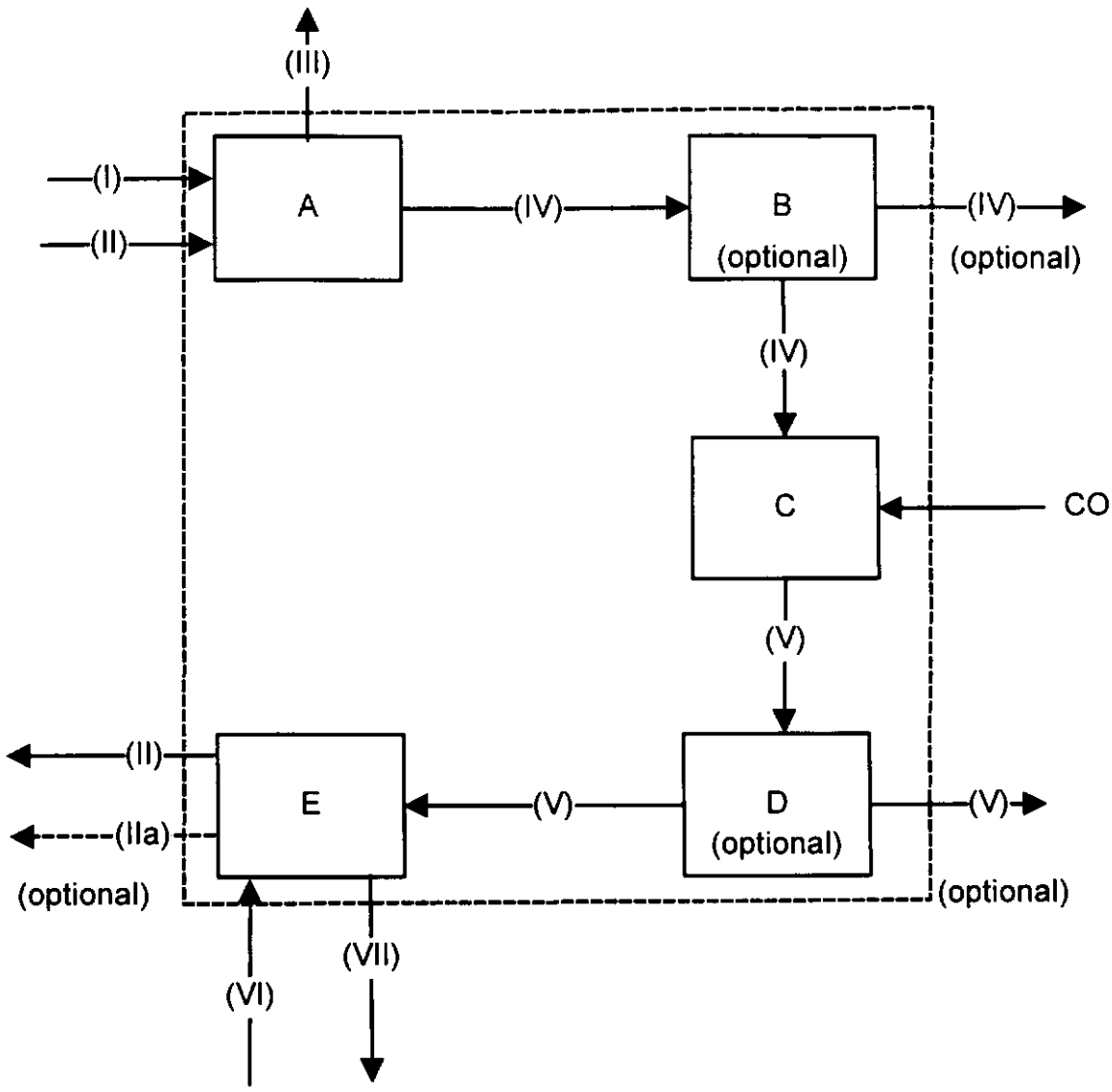

Fig. 2: Block diagram

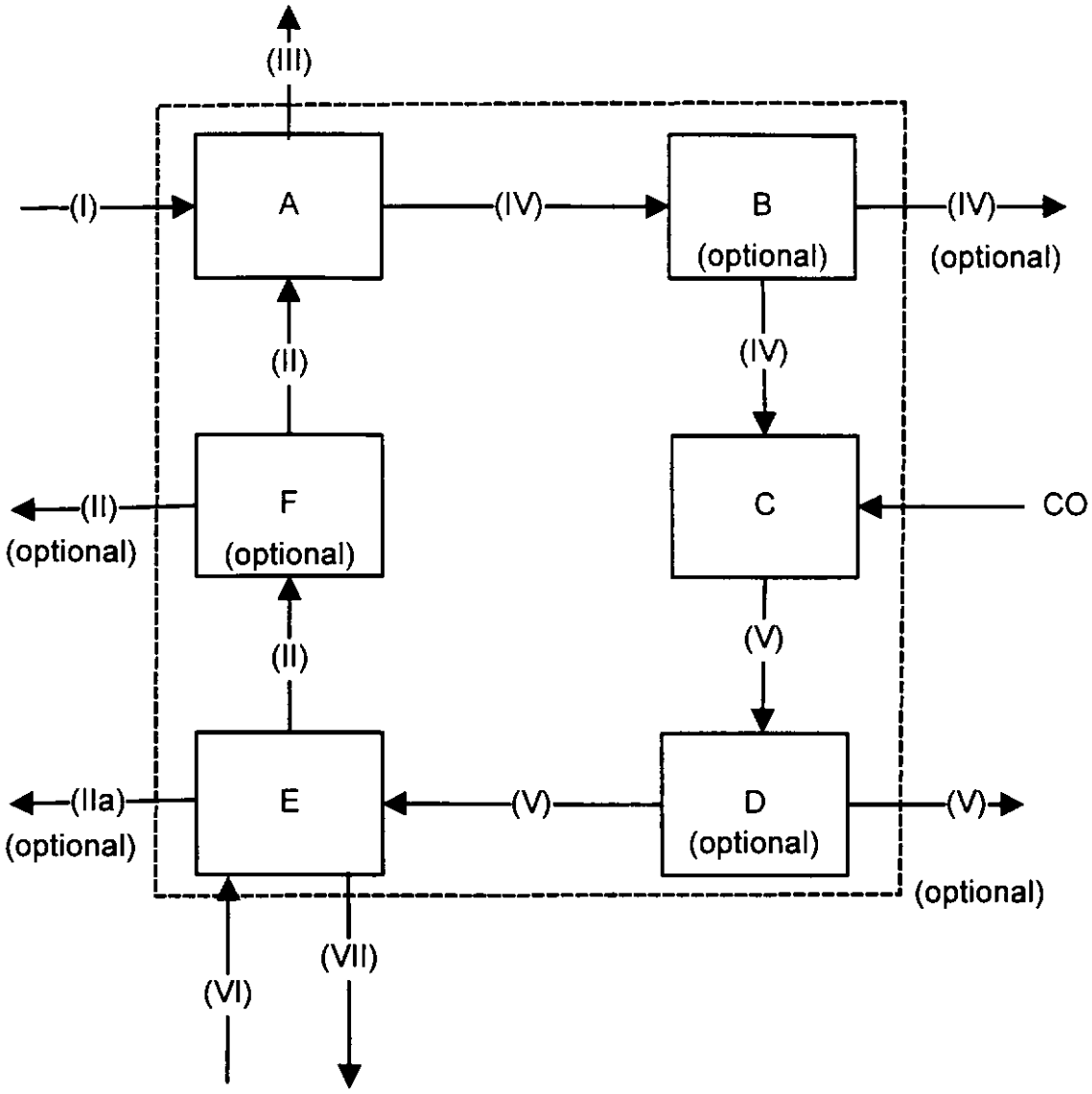

Fig. 3: Simplified process flow diagram for the preferred preparation of formic acid, carboxylic anhydride (VII) and acetic acid (Variant 1)

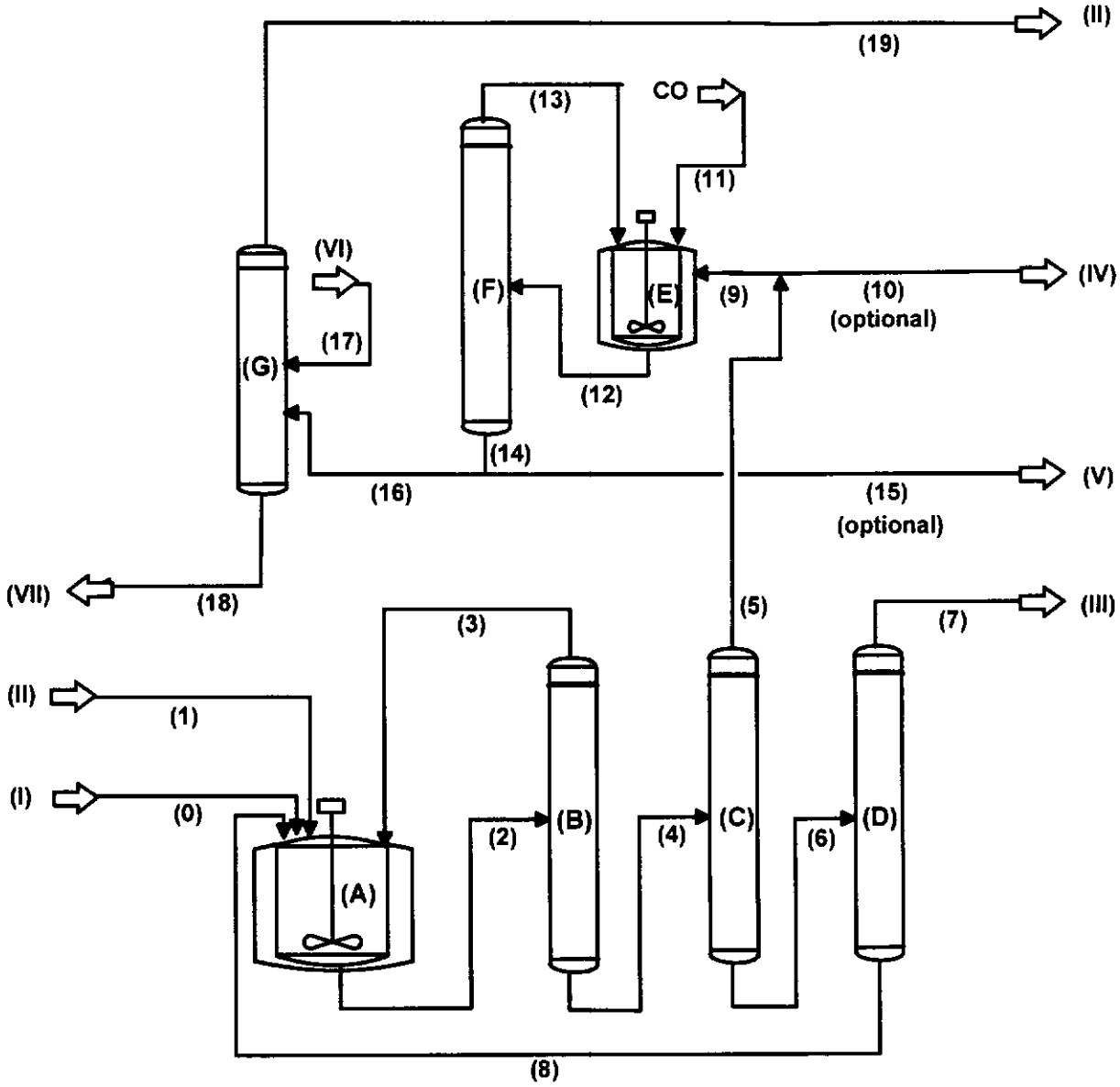
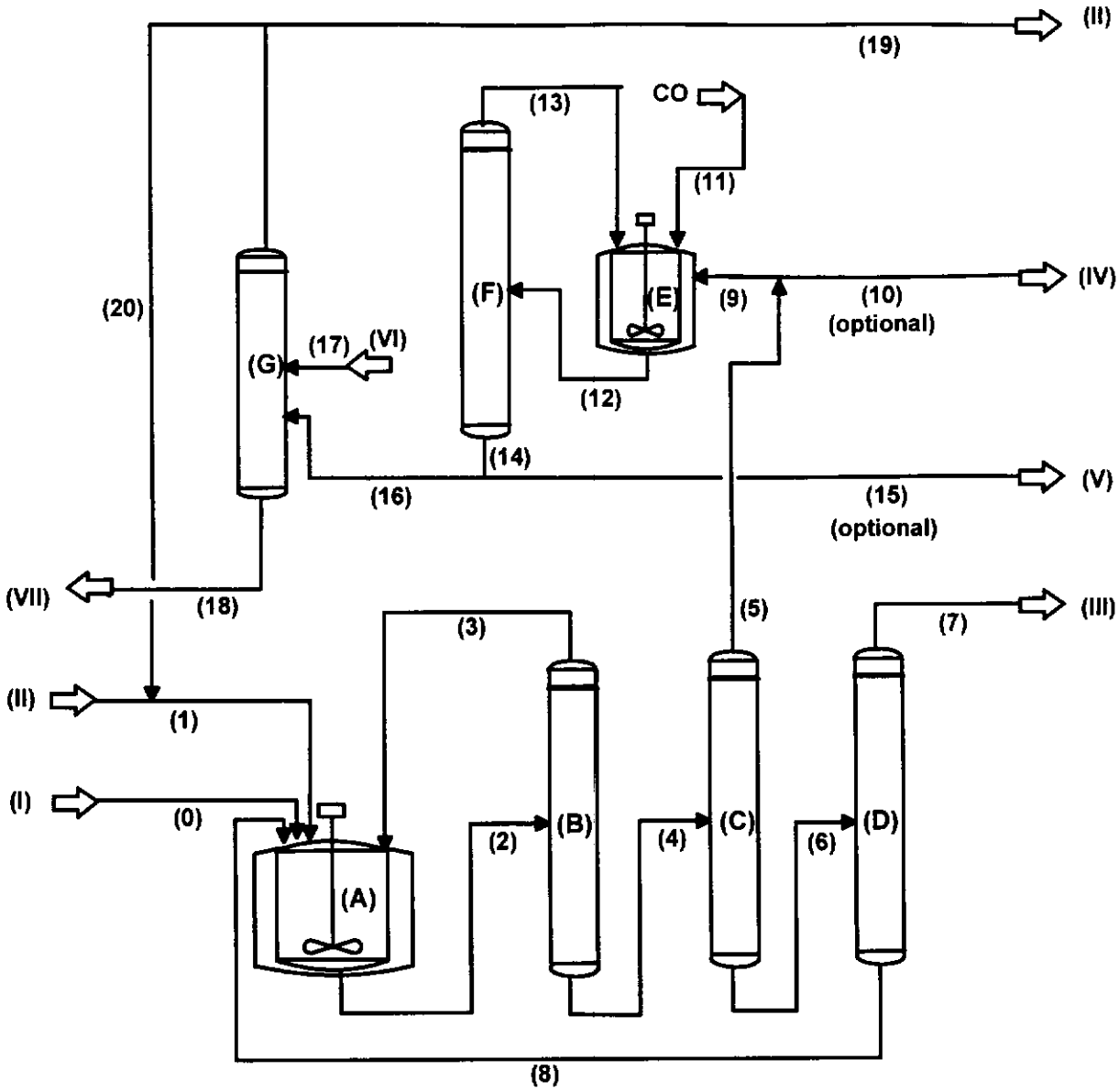
Fig. 4: Simplified process flow diagram for the preferred preparation of formic acid, carboxylic anhydride (VII) and acetic acid (with acetic acid circuit) (Variant 2)