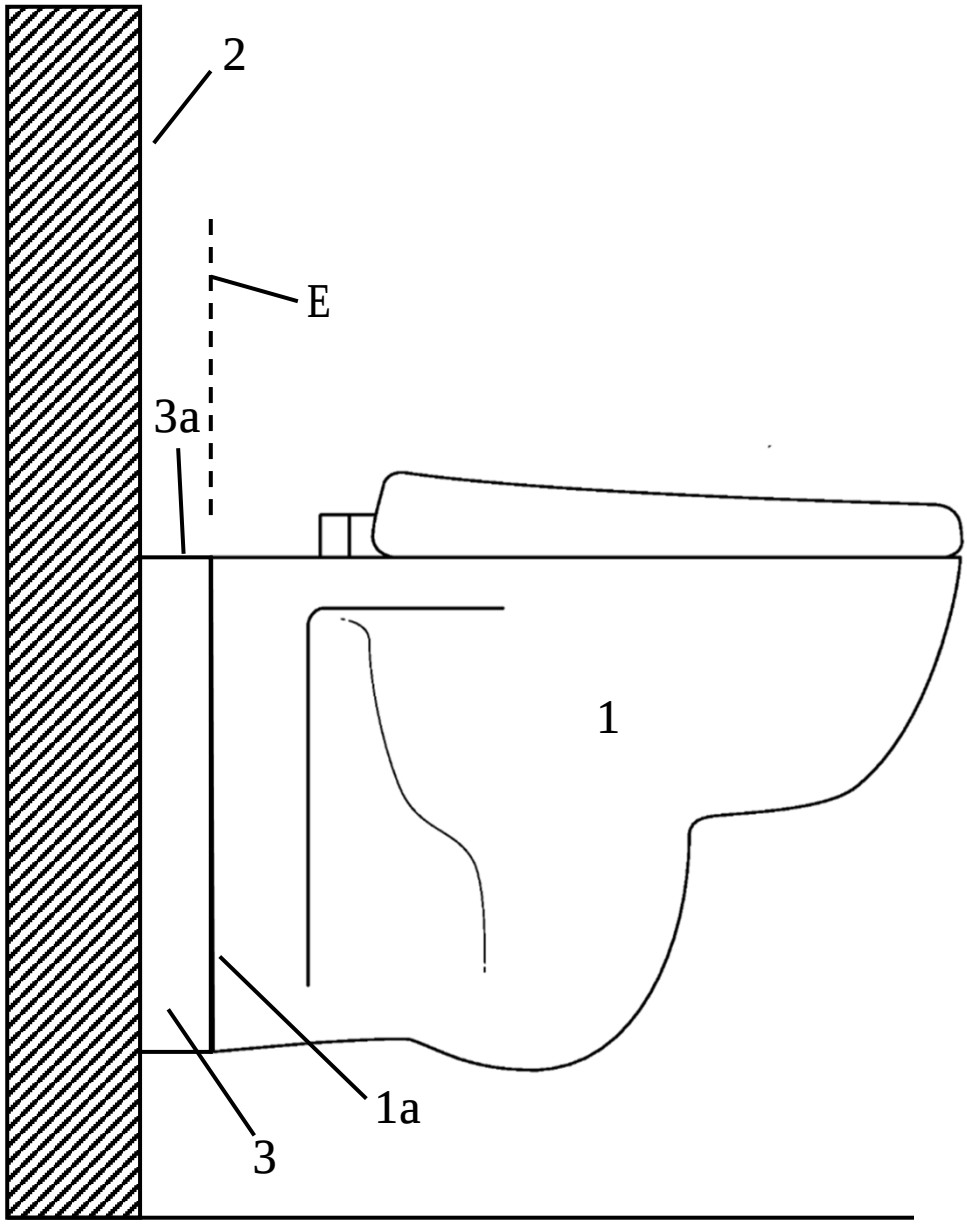

Figure 1A

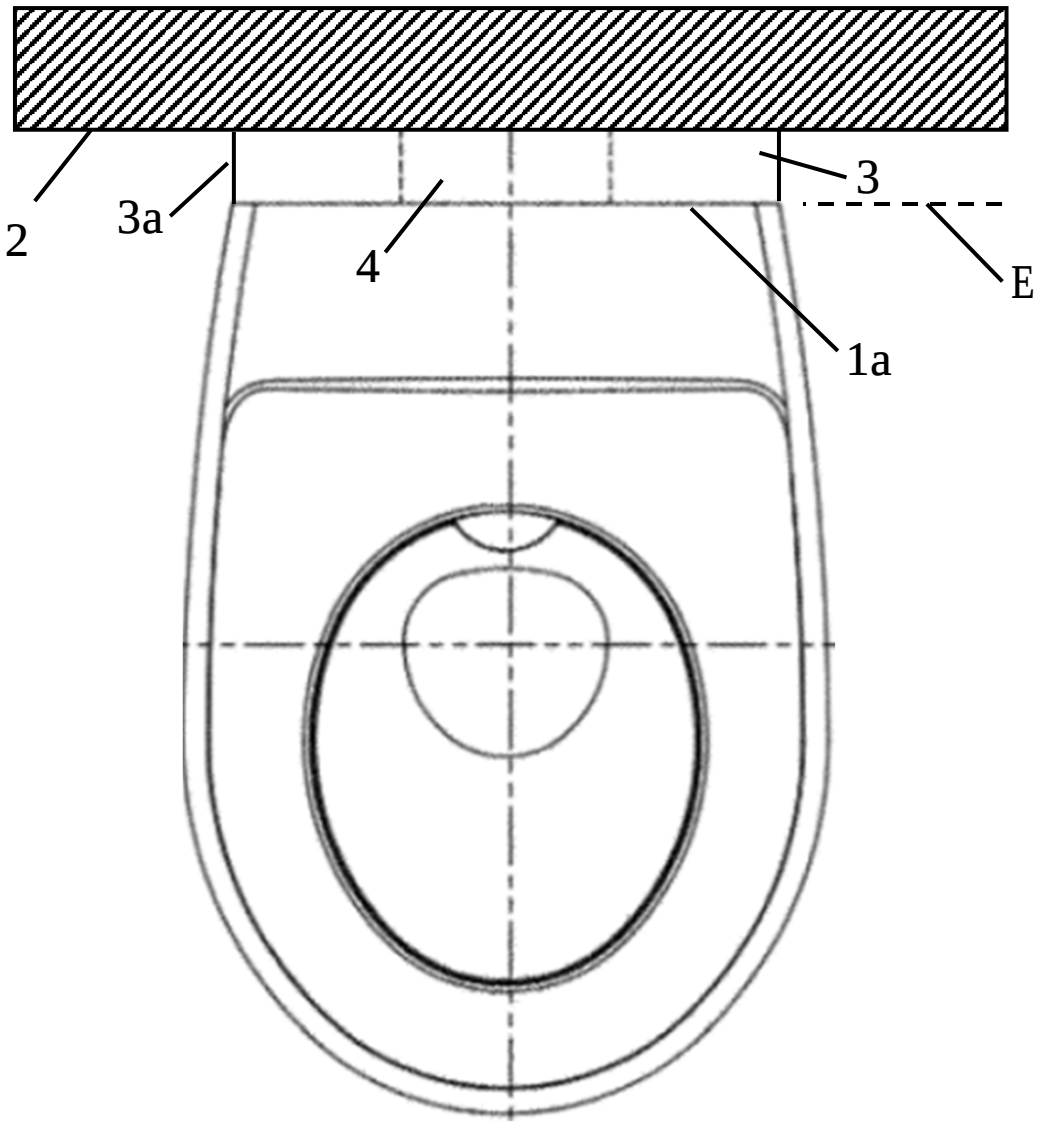

Figure 1B

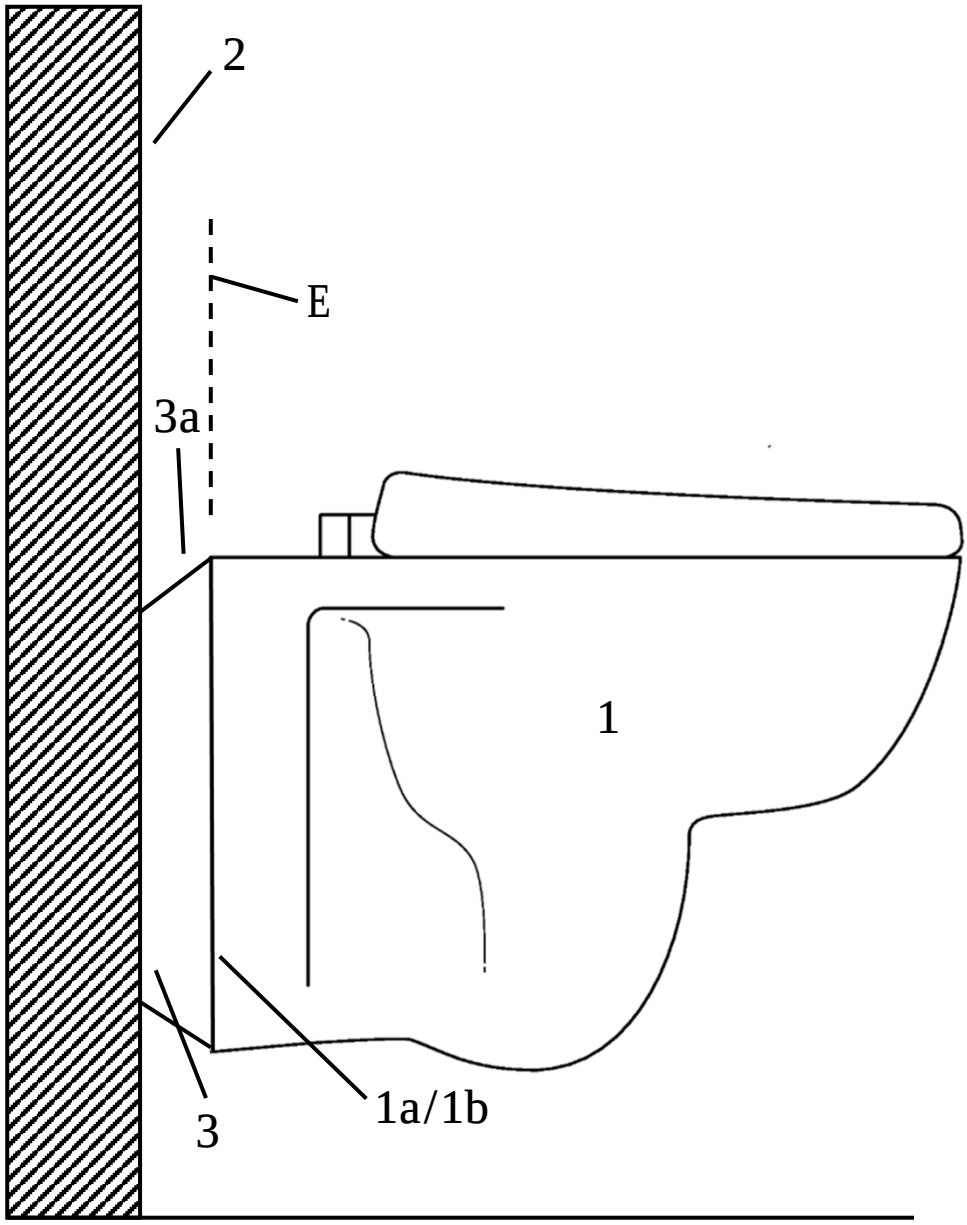

Figure 2A

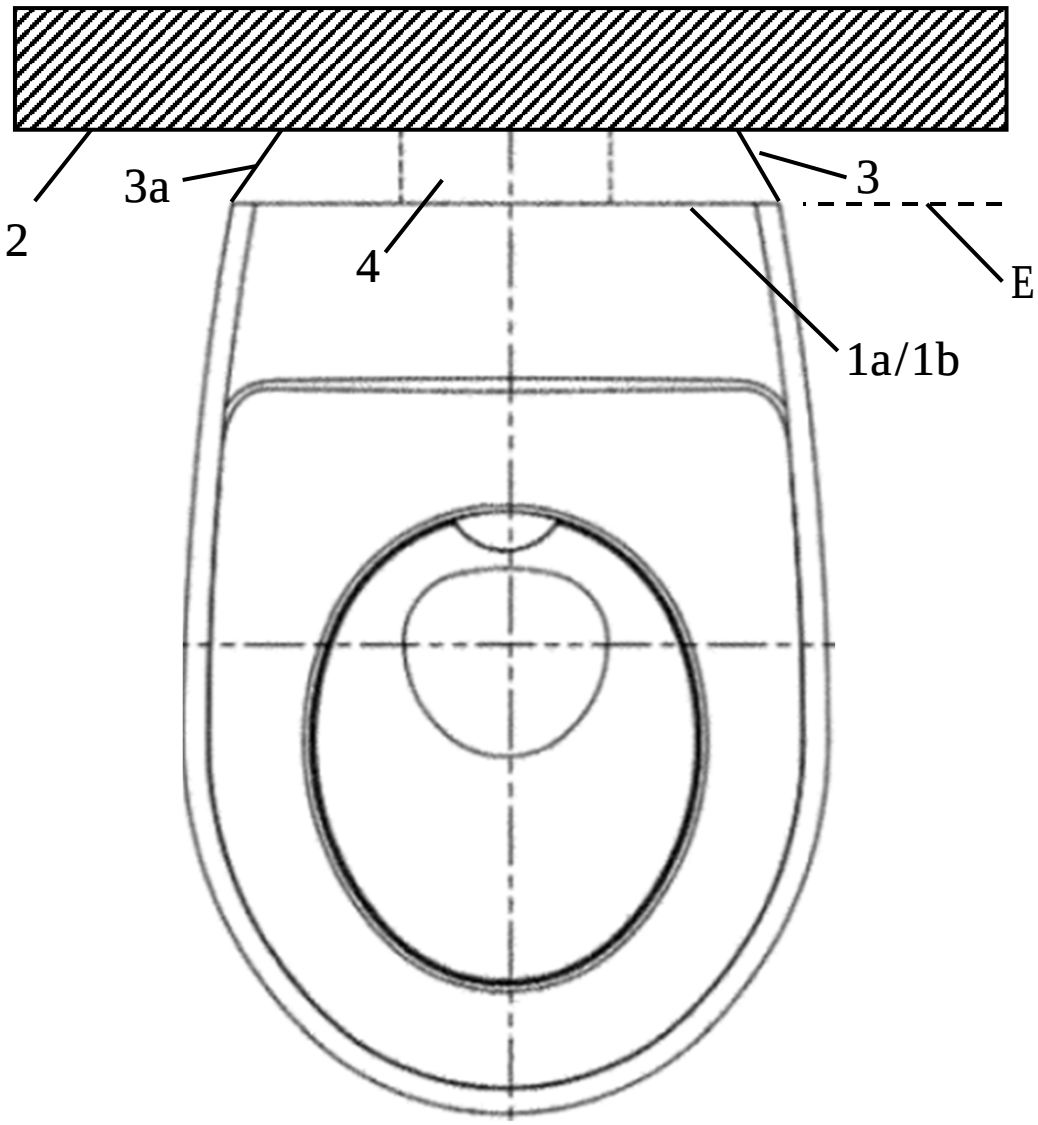

Figure 2B

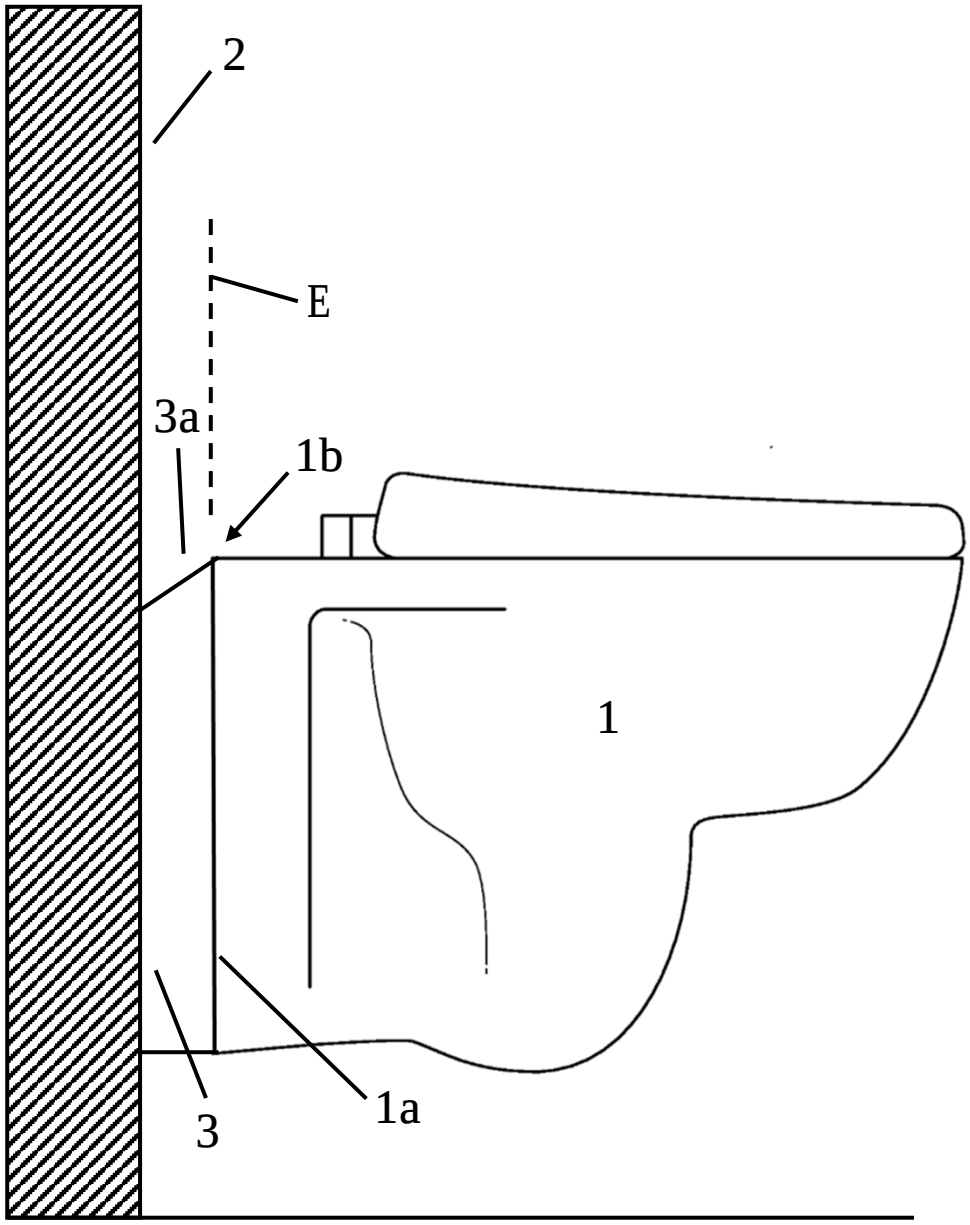

Figure 3A

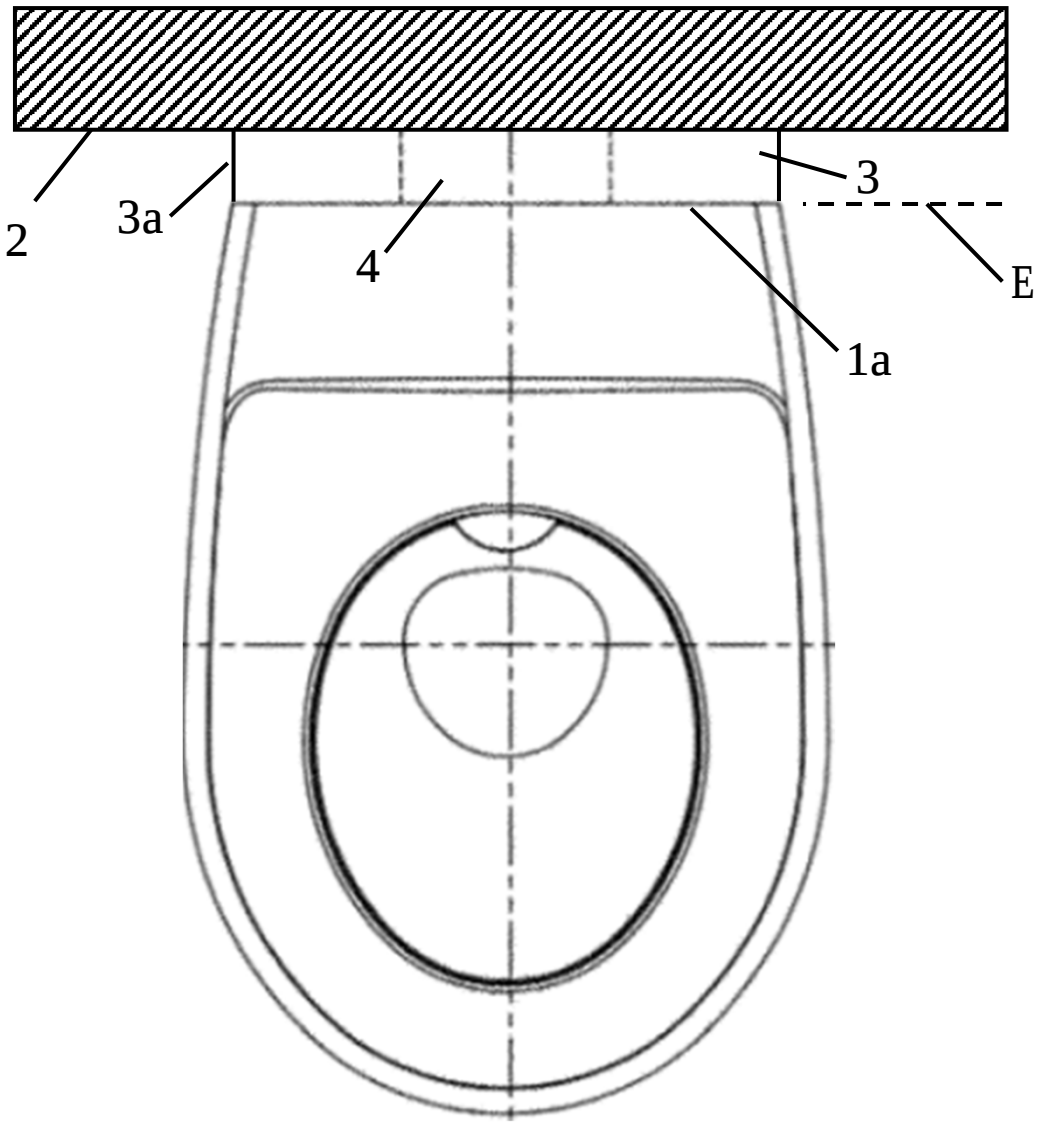

Figure 3B

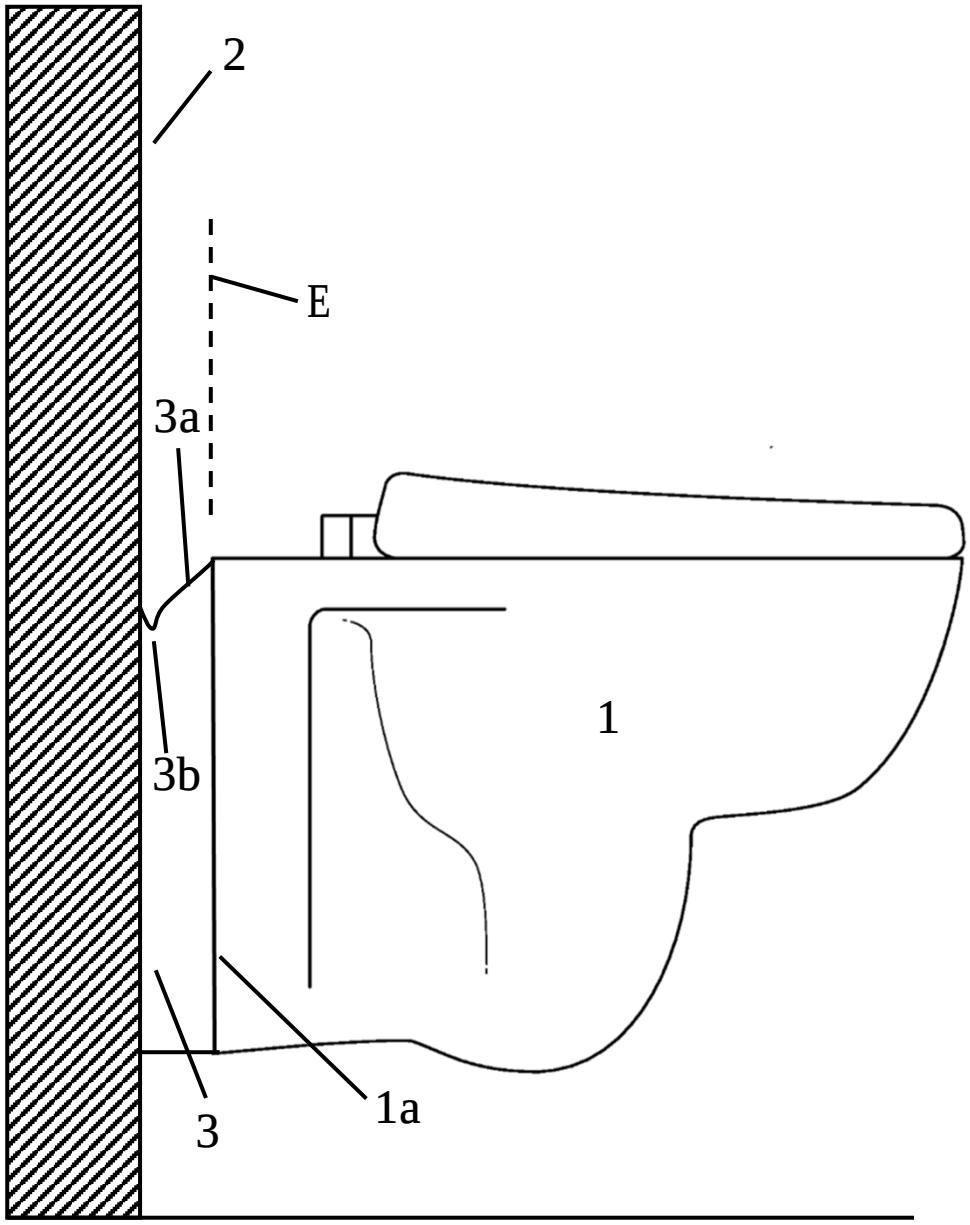

Figure 4

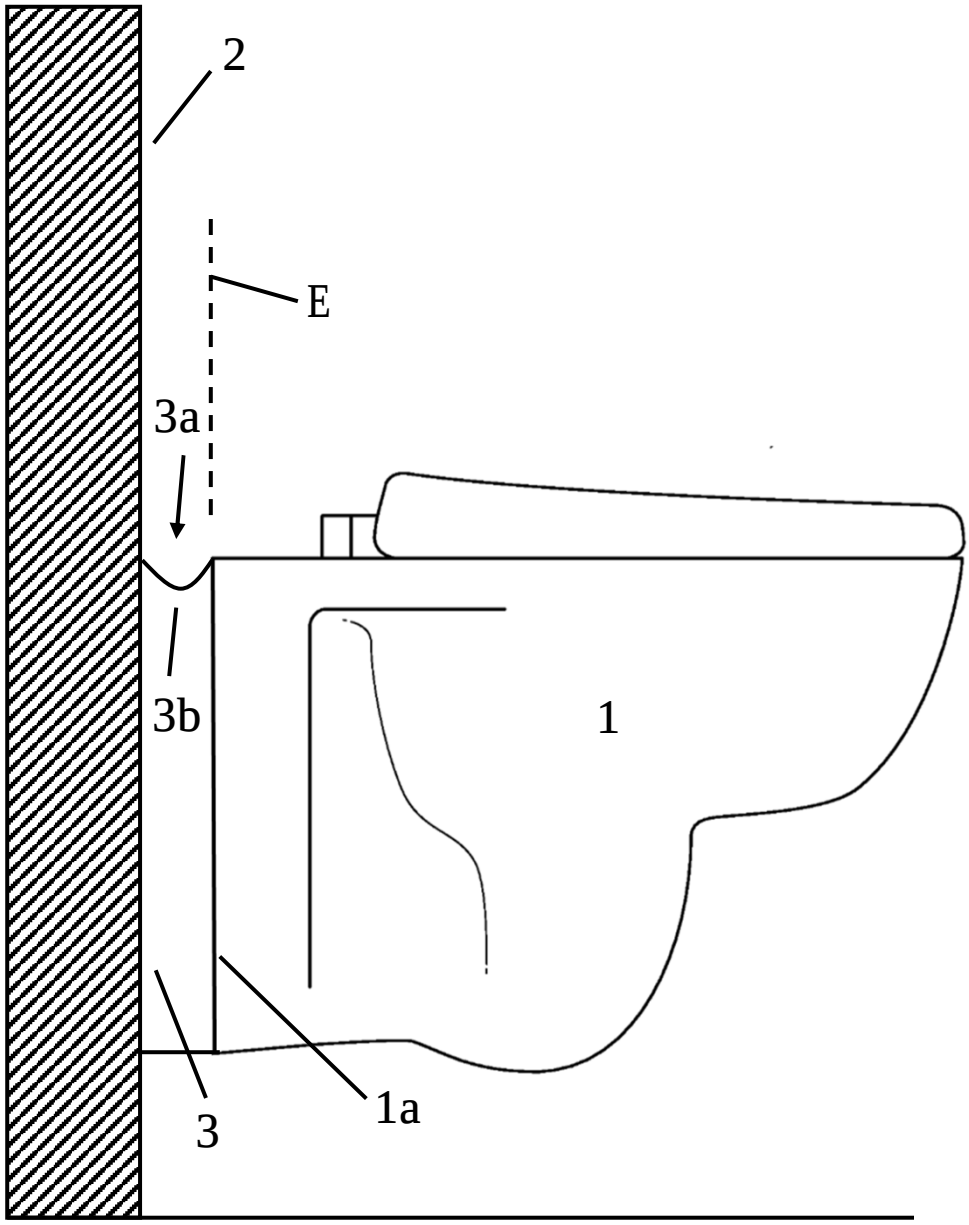

Figure 5

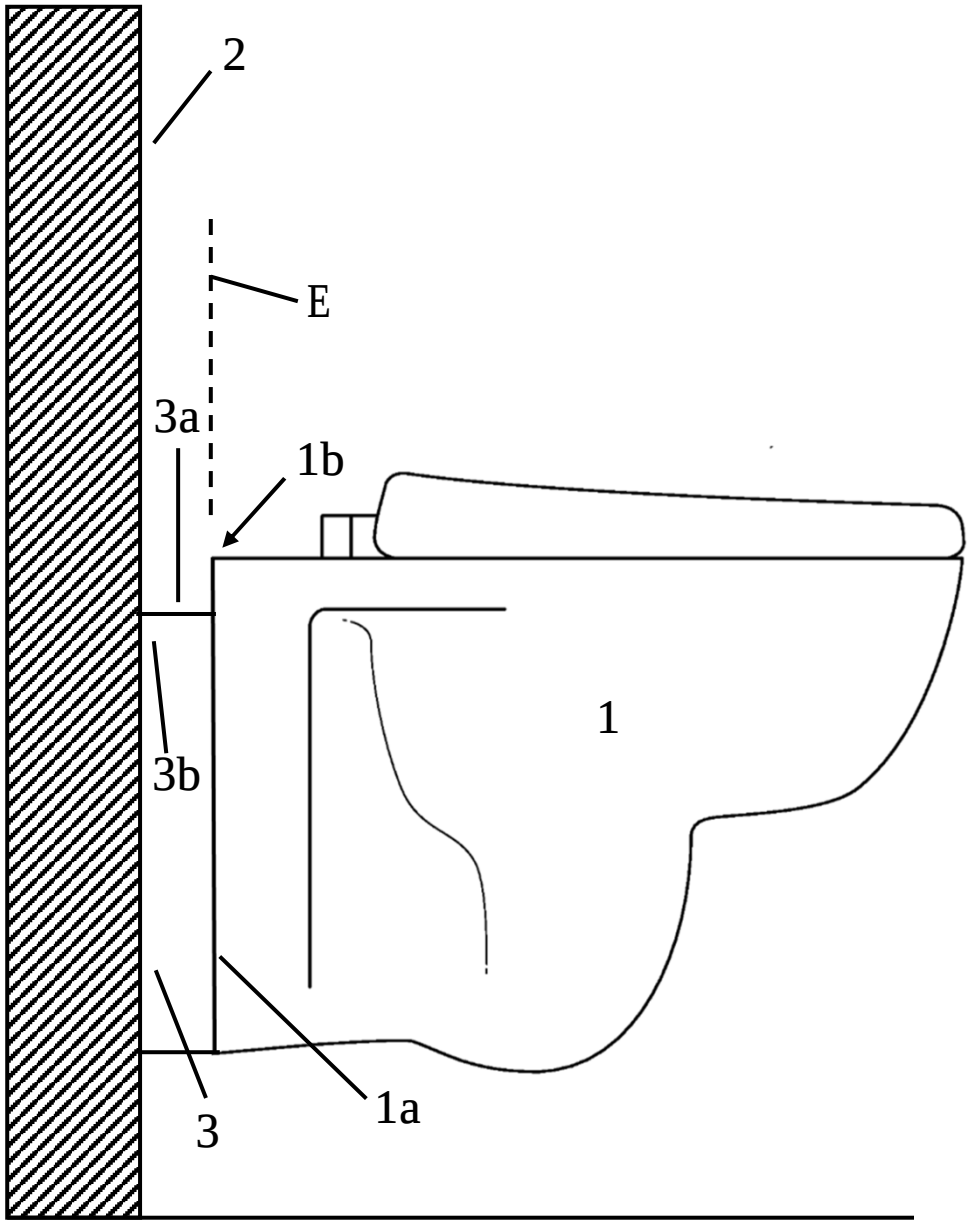

Figure 6A

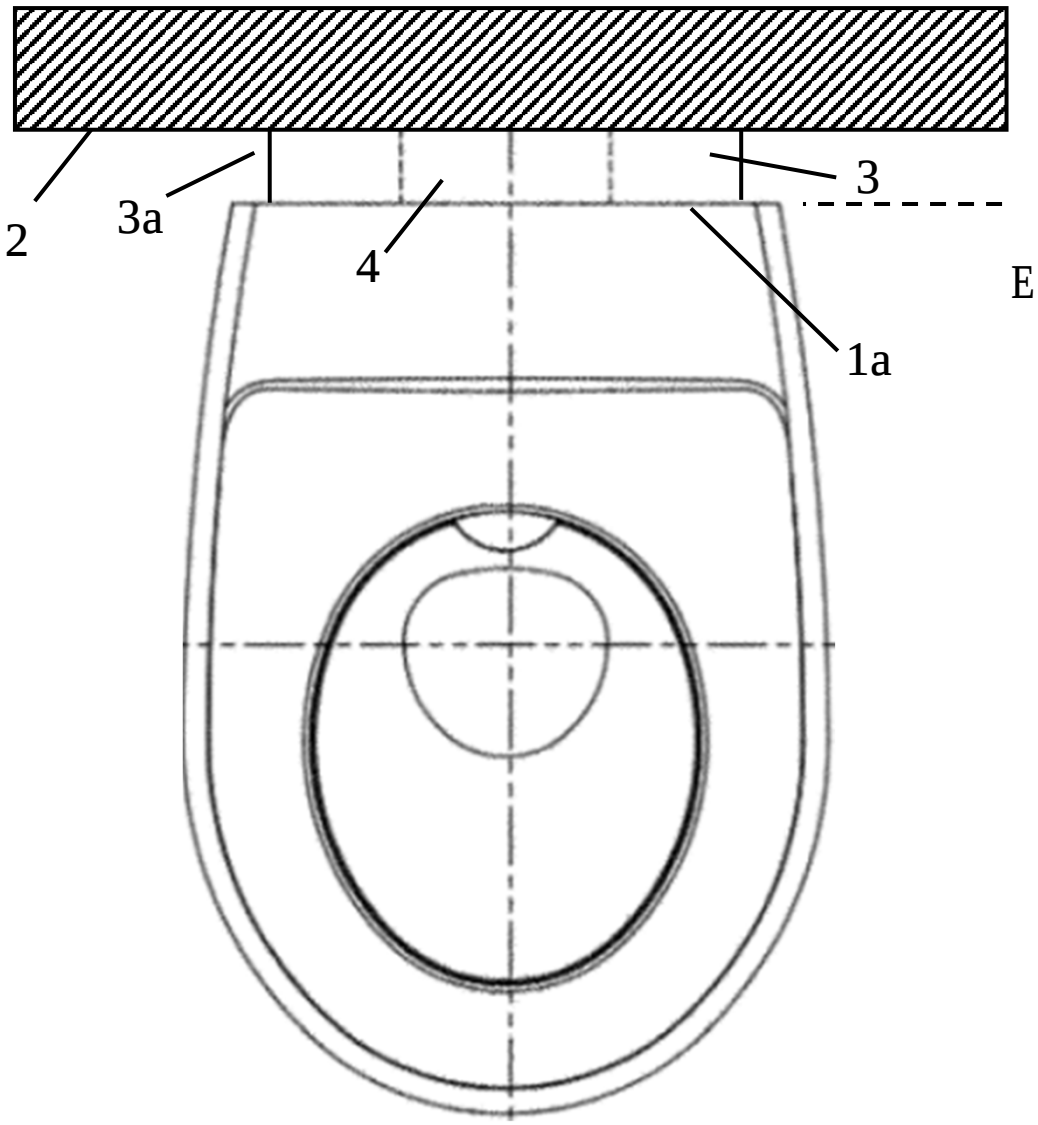

Figure 6B

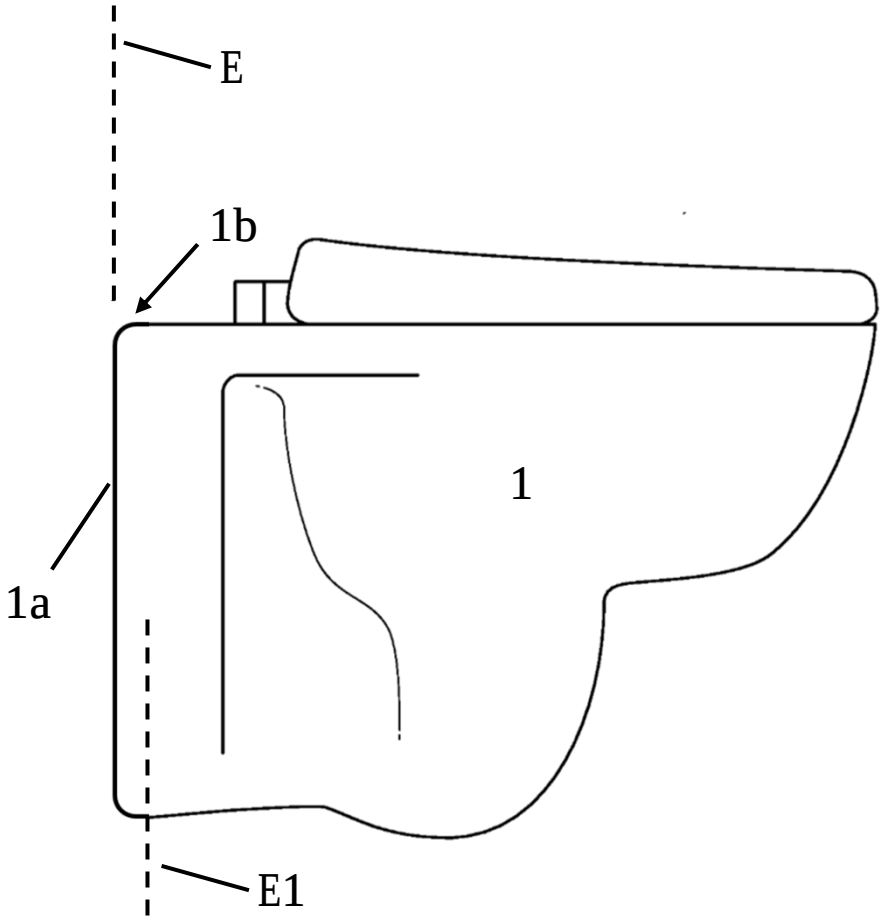

Figure 7

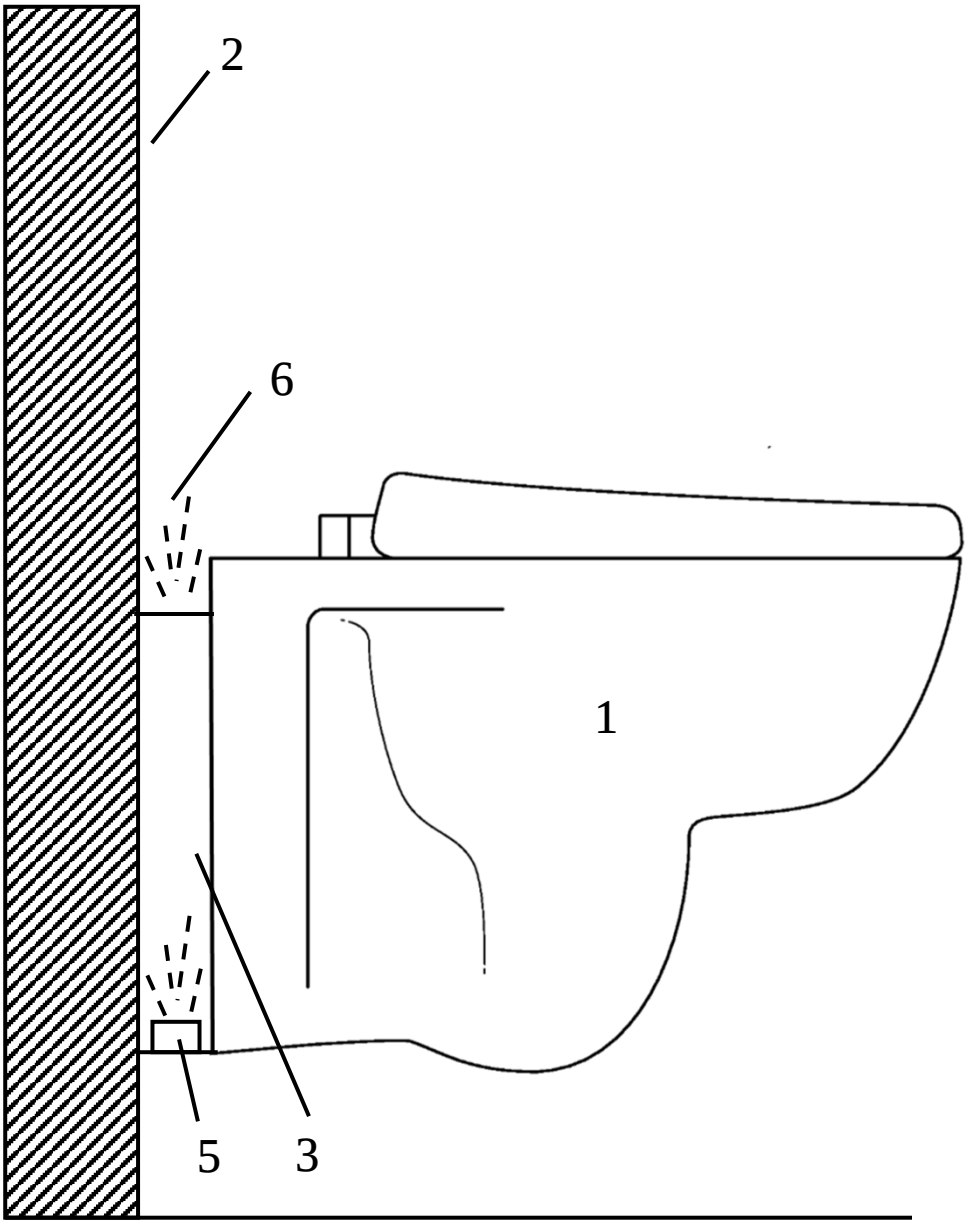

Figure 8A

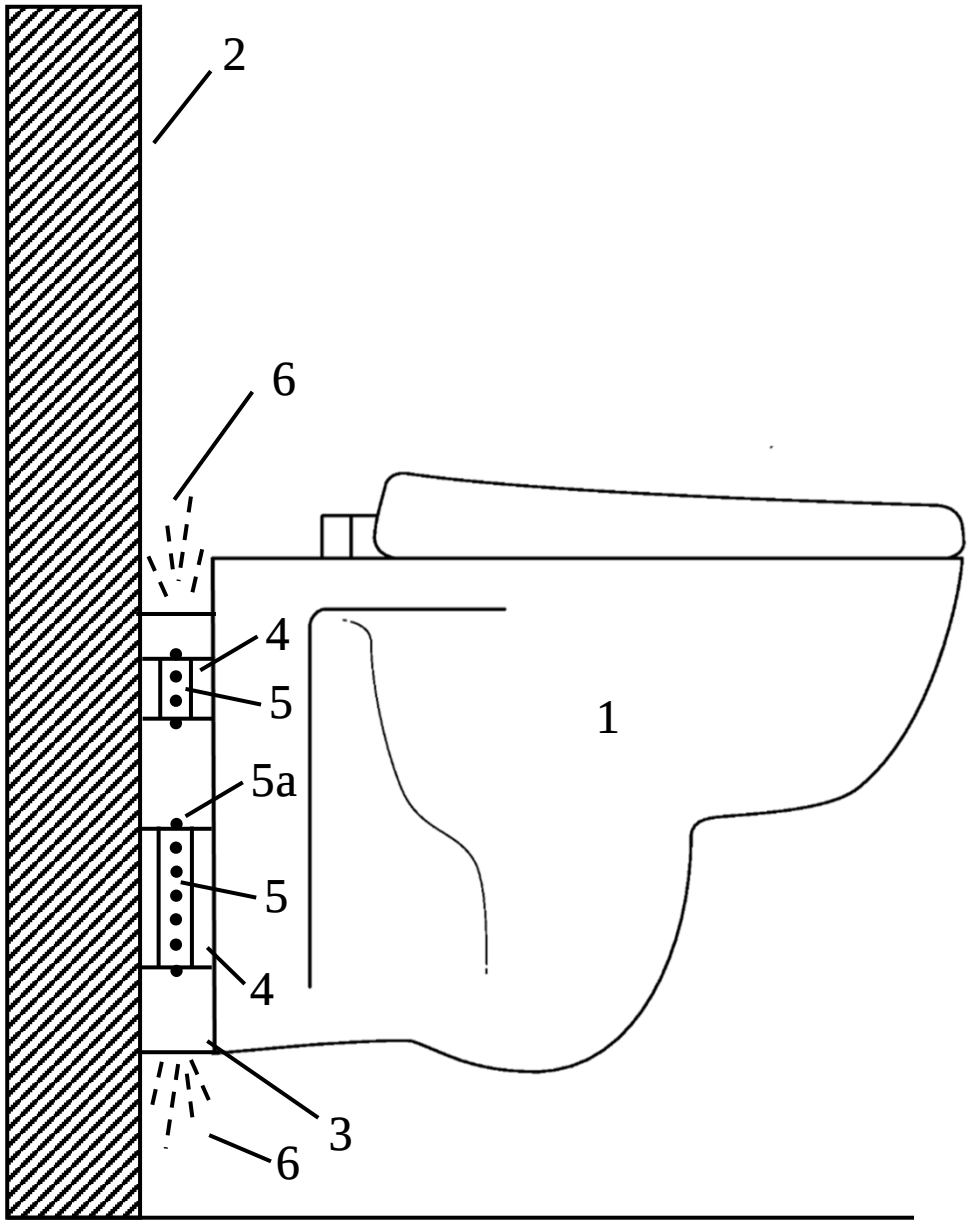

Figure 8B

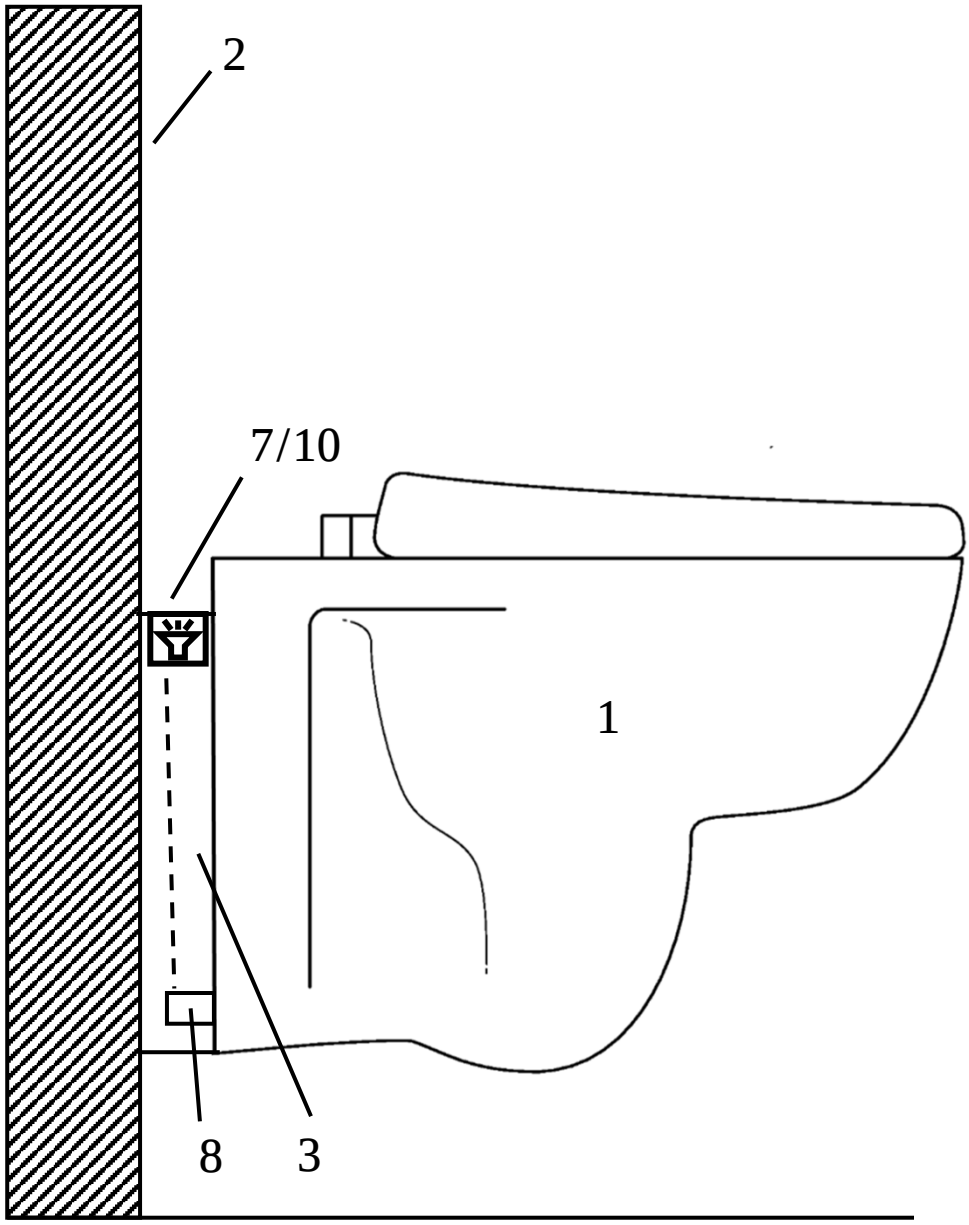

Figure 9

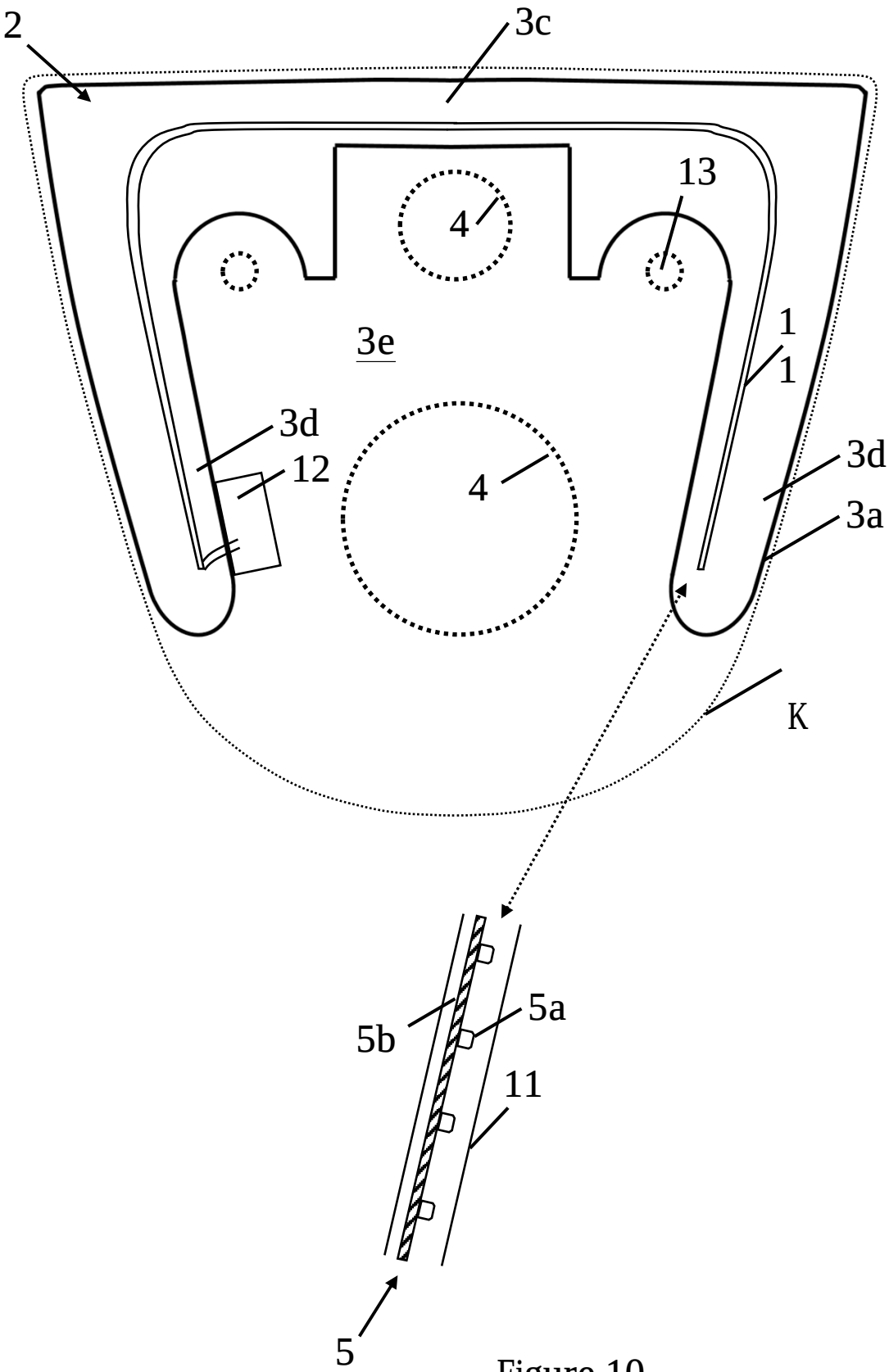

Figure 10