

Fig. 1

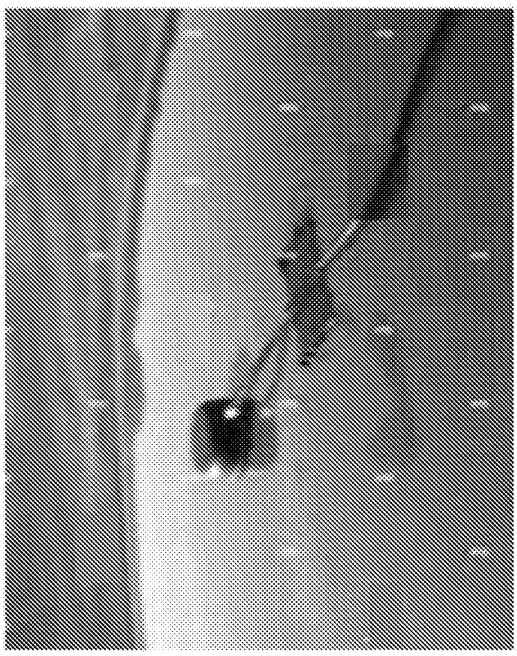

Fig. 2b



Fig. 2a



Fig. 2c

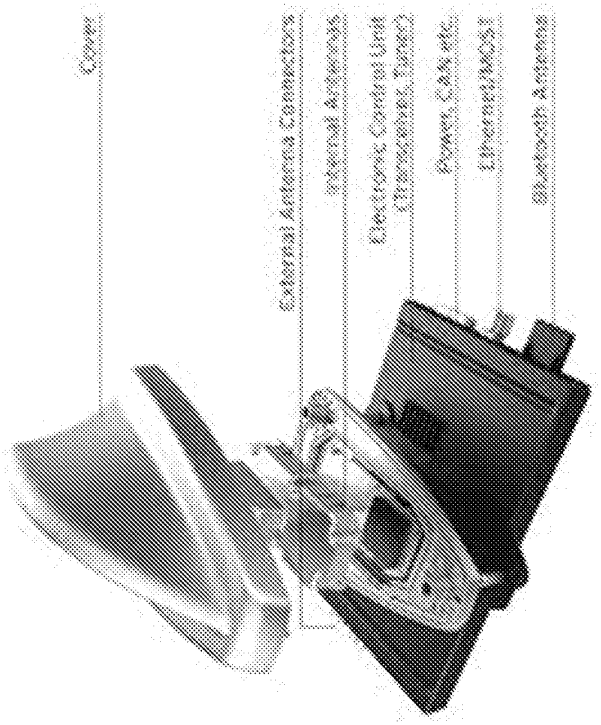
Cover
External Antenna Connectors
Internal Antenna
Electronic Control Unit (Transceiver, Tuner)
Power, CAN etc.
Channel/MOST
Bluetooth Antenna

Fig. 3b

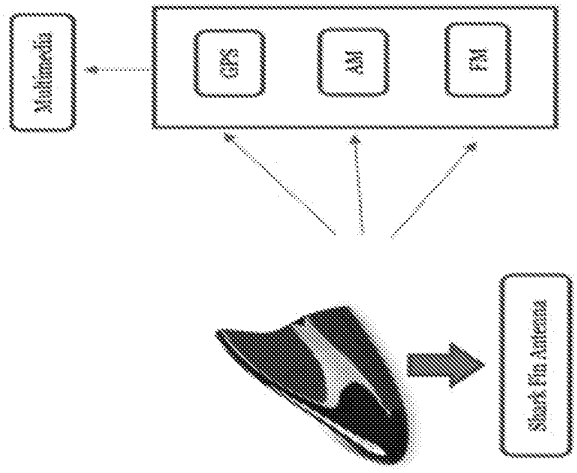
Multimedia
GPS
AM
FM
Shark Fin Antenna

Fig. 3a

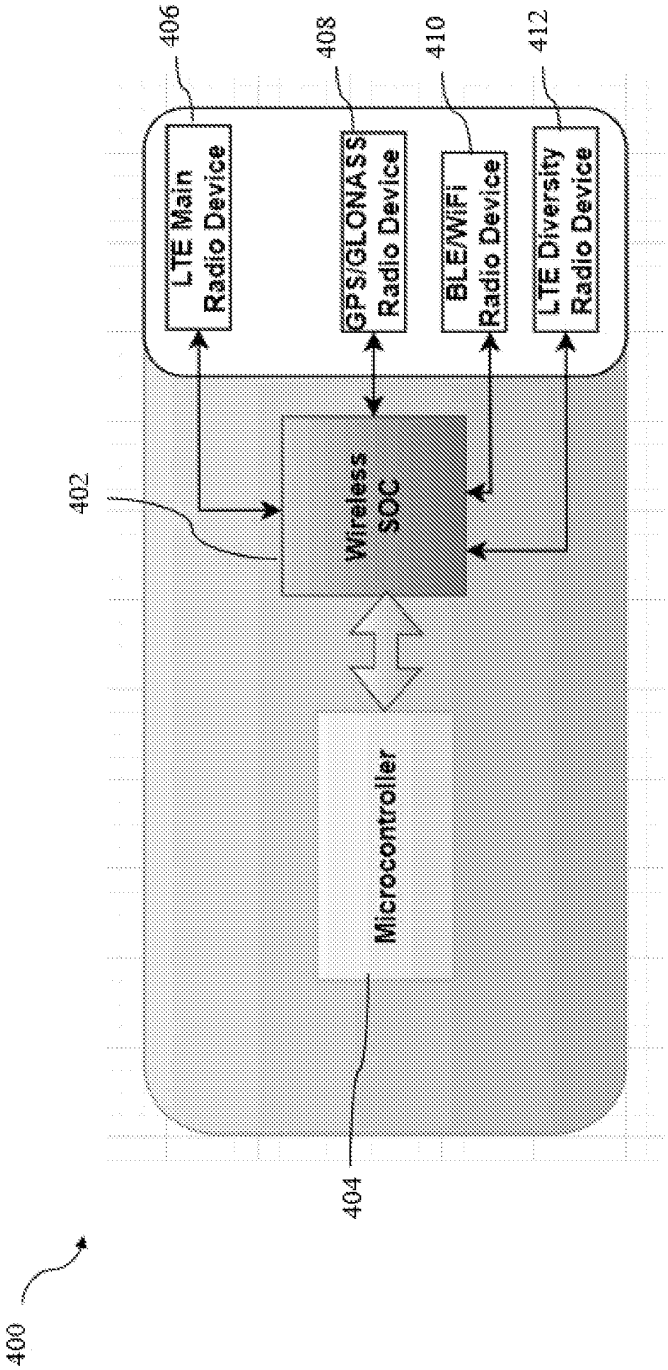
400
402
404
406
408
410
412
LTE Main Radio Device
GPS/GLONASS Radio Device
BLE/WiFi Radio Device
LTE Diversity Radio Device
Wireless SOC
Microcontroller

Fig. 4

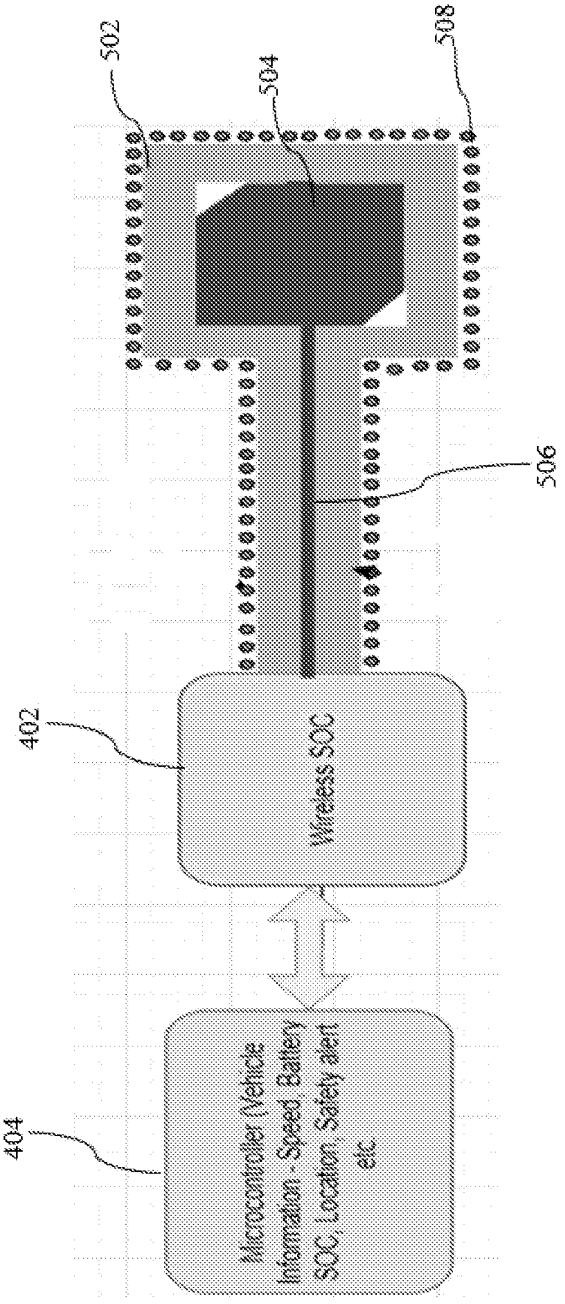
502
504
508
506
402
Wireless SOC
404
Microcontroller (Vehicle Information - Speed Battery SOC, Location, Safety alert etc.

Fig. 5

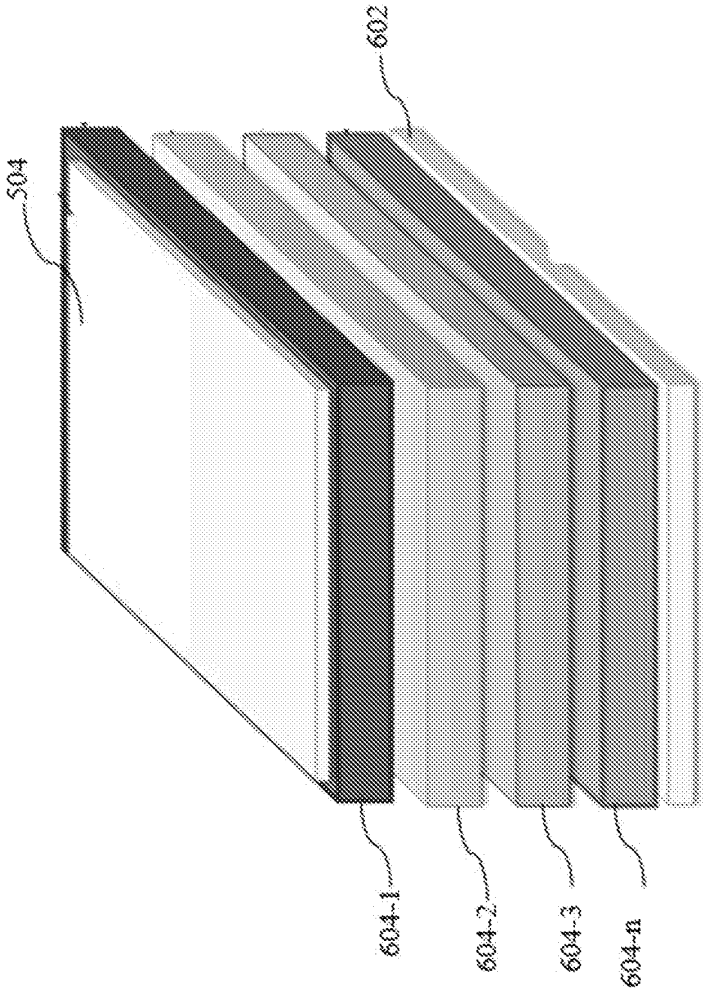

Fig. 6

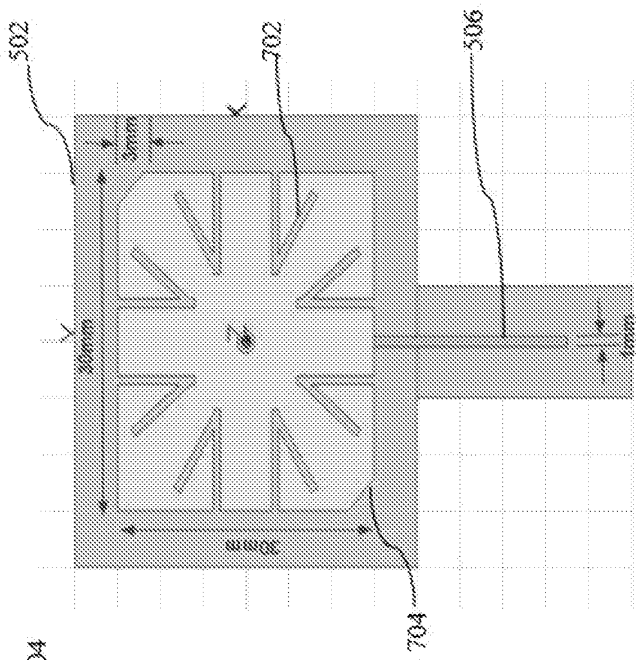

Fig. 7b

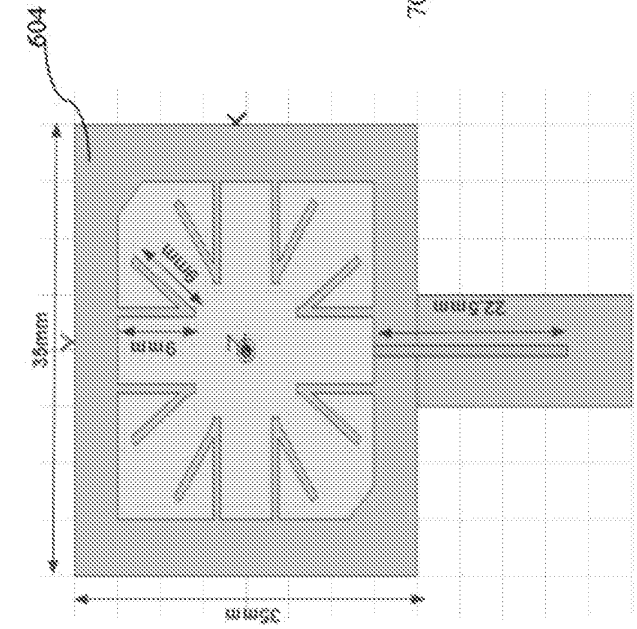

Fig. 7a

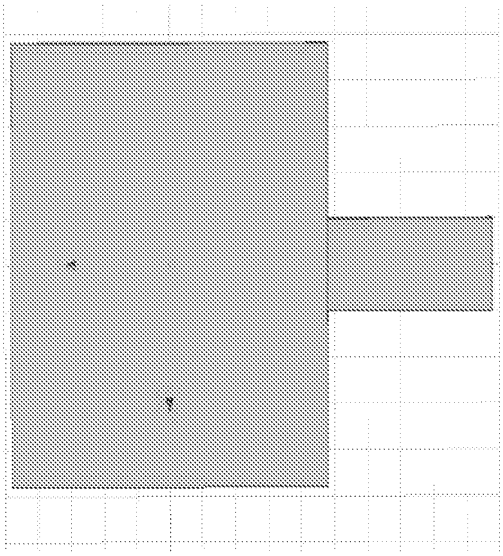

Fig. 8b

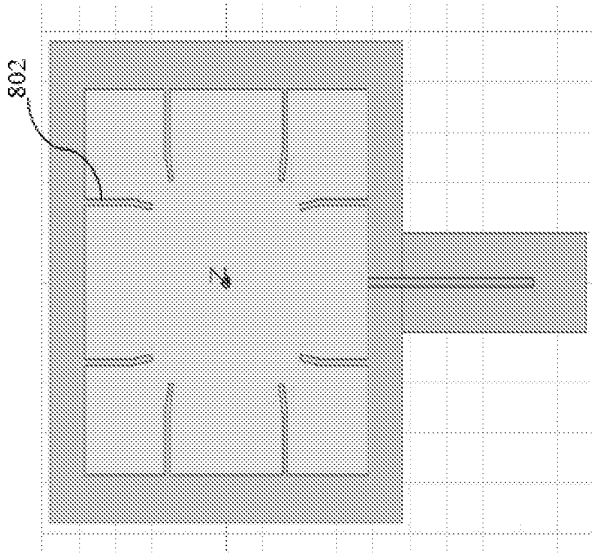

Fig. 8a

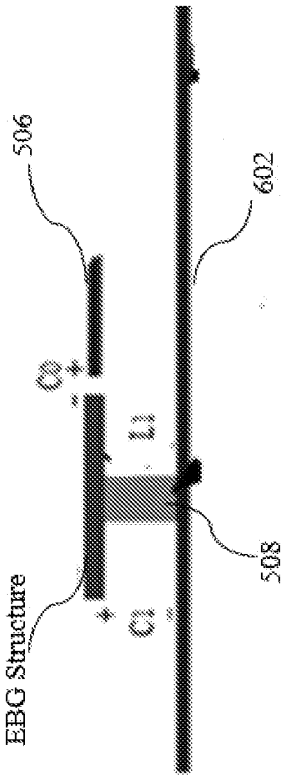

Fig. 9a

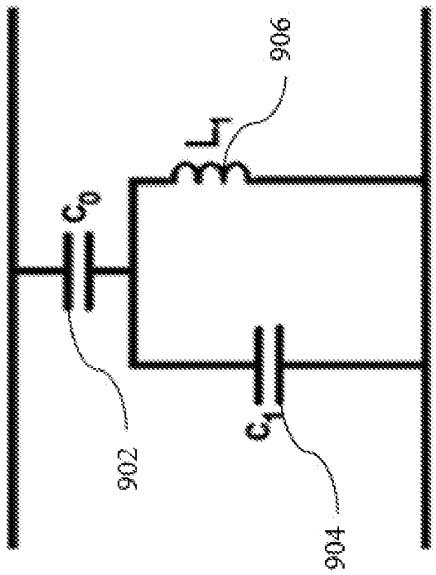

Fig. 9b

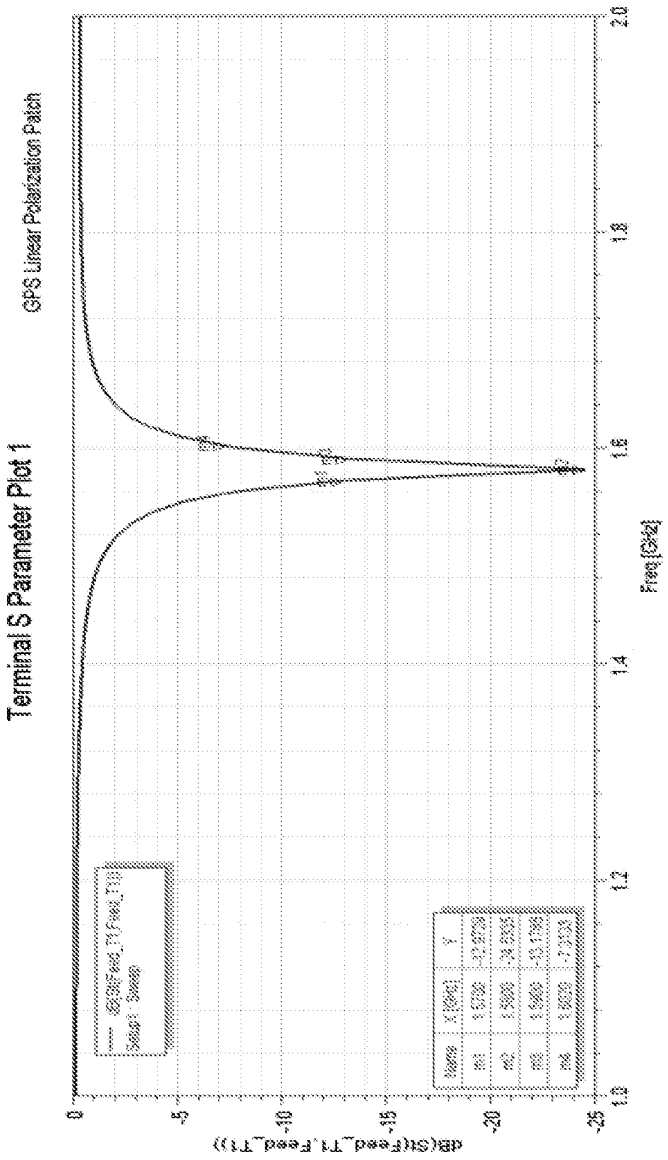
Terminal S Parameter Plot 1
GPS Linear Polarization Patch
dB(S(Feed_T1,Feed_T1))
Freq [GHz]
0
-5
-10
-15
-20
-25
1.0
1.2
1.4
1.6
1.8
2.0

Fig. 10

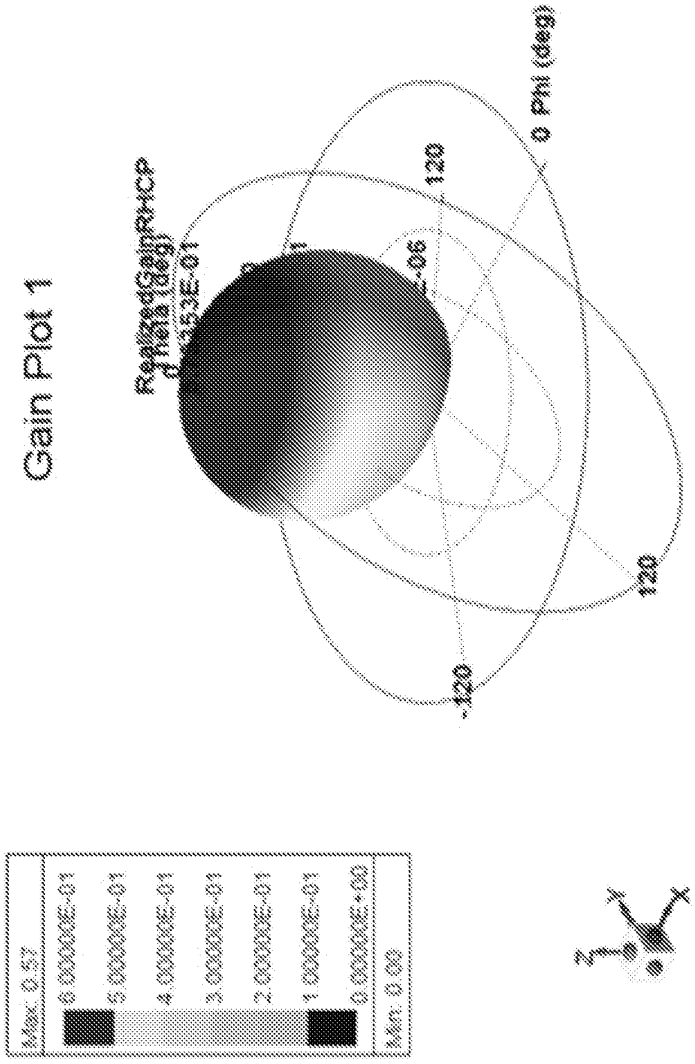
Gain Plot 1
Max: 0.57
6.0000E-01
5.0000E-01
4.0000E-01
3.0000E-01
2.0000E-01
1.0000E-01
0.0000E+00
Min: 0.00
120
-120
0 Phi (deg)

Fig. 11a

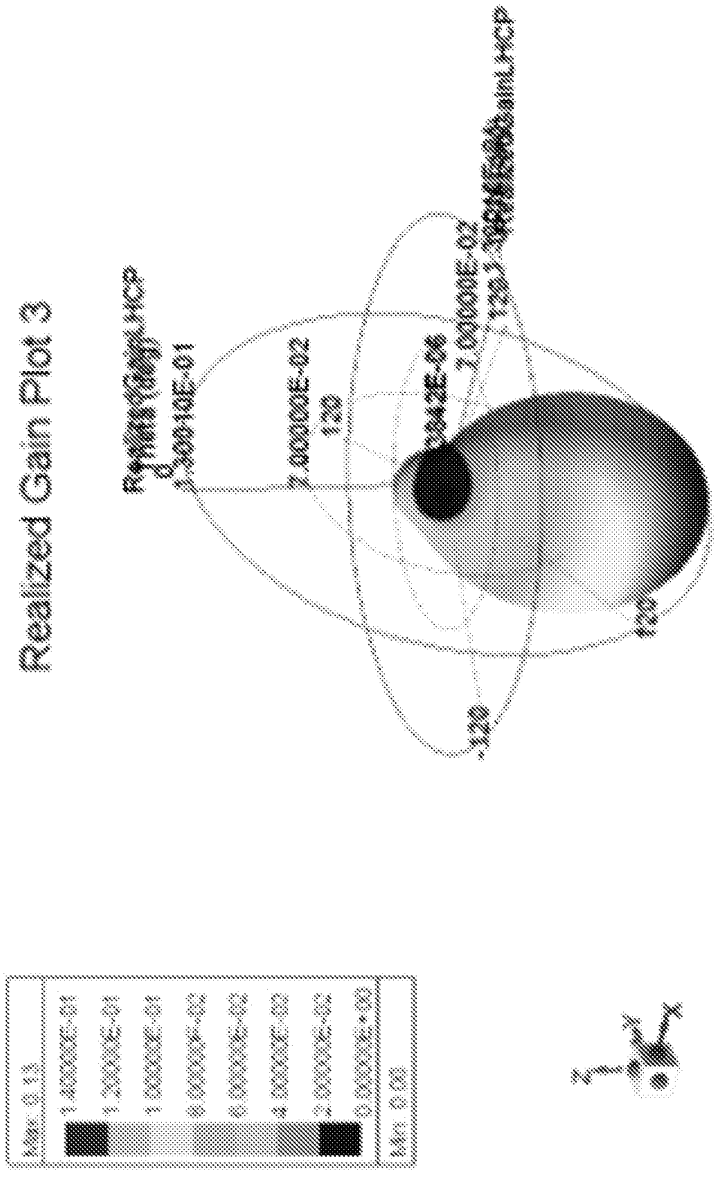
Realized Gain Plot 3
Max: 0.15
1.40000E-01
1.20000E-01
1.00000E-01
8.00000E-02
6.00000E-02
4.00000E-02
2.00000E-02
0.00000E+00
Min: 0.00
7.00000E-02
120
-120

Fig. 11b

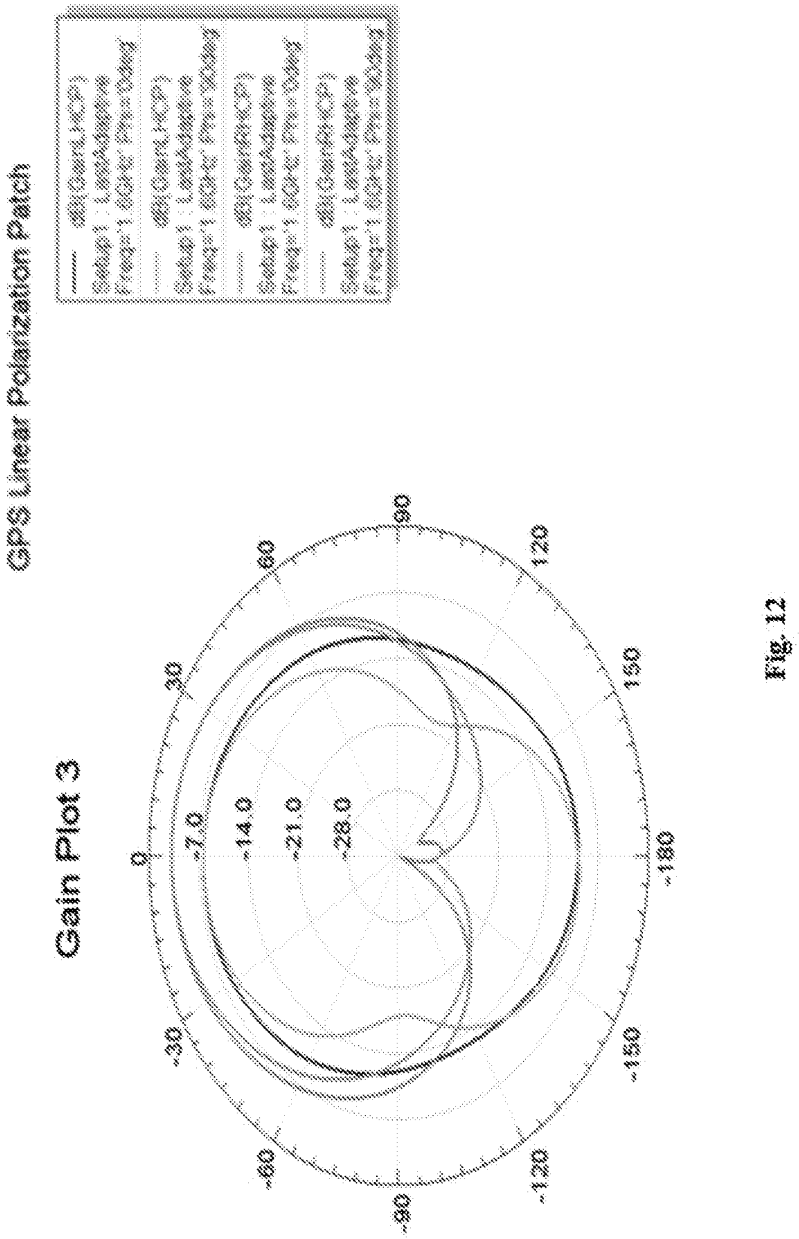
GPS Linear Polarization Patch
dB(GainLHCP)
Setup1 : LastAdaptive
Freq='1.6GHz' Phi='0deg'
dB(GainRHCP)
Setup1 : LastAdaptive
Freq='1.6GHz' Phi='0deg'
dB(GainRHCP)
Setup1 : LastAdaptive
Freq='1.6GHz' Phi='90deg'
dB(GainLHCP)
Setup1 : LastAdaptive
Freq='1.6GHz' Phi='90deg'
Gain Plot 3
90
120
150
180
-150
-120
-90
-60
-30
0
30
60
-7.0
-14.0
-21.0
-28.0

Fig. 12

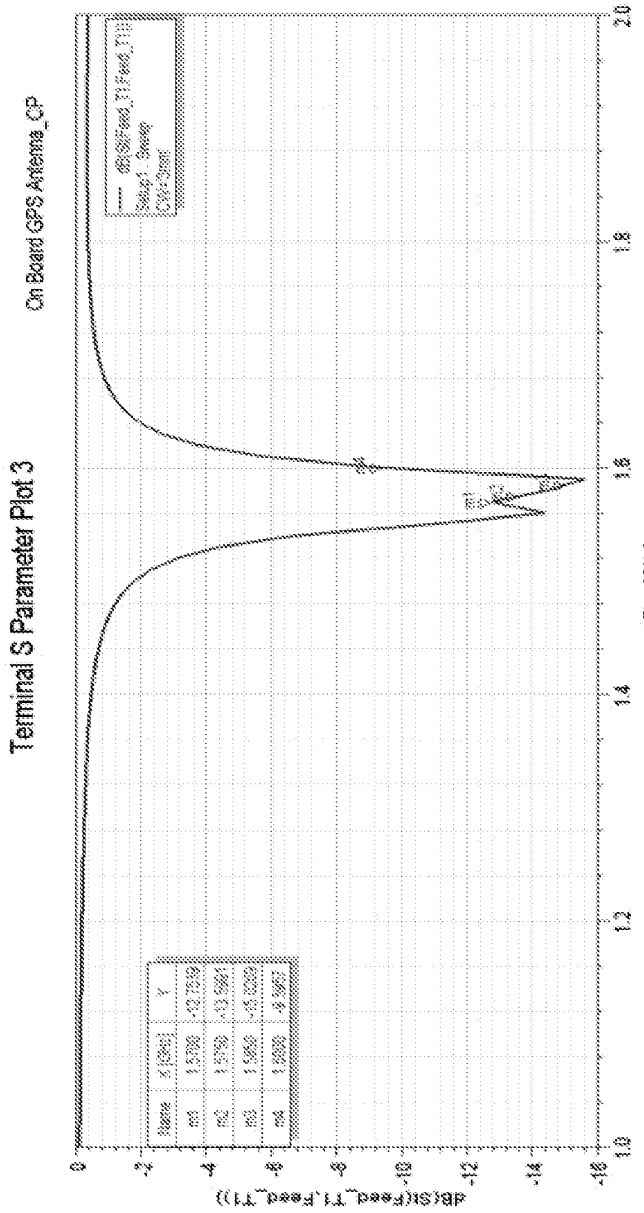
Terminal S Parameter Plot 3
On Board GPS Antenna_CP
Freq [GHz]
dB(St(Feed_T1,Feed_T1))
Name
X [GHz]
Y
m1
m2
m3
m4
0
-2
-4
-6
-8
-10
-12
-14
-16
1.0
1.2
1.4
1.6
1.8
2.0

Fig. 13

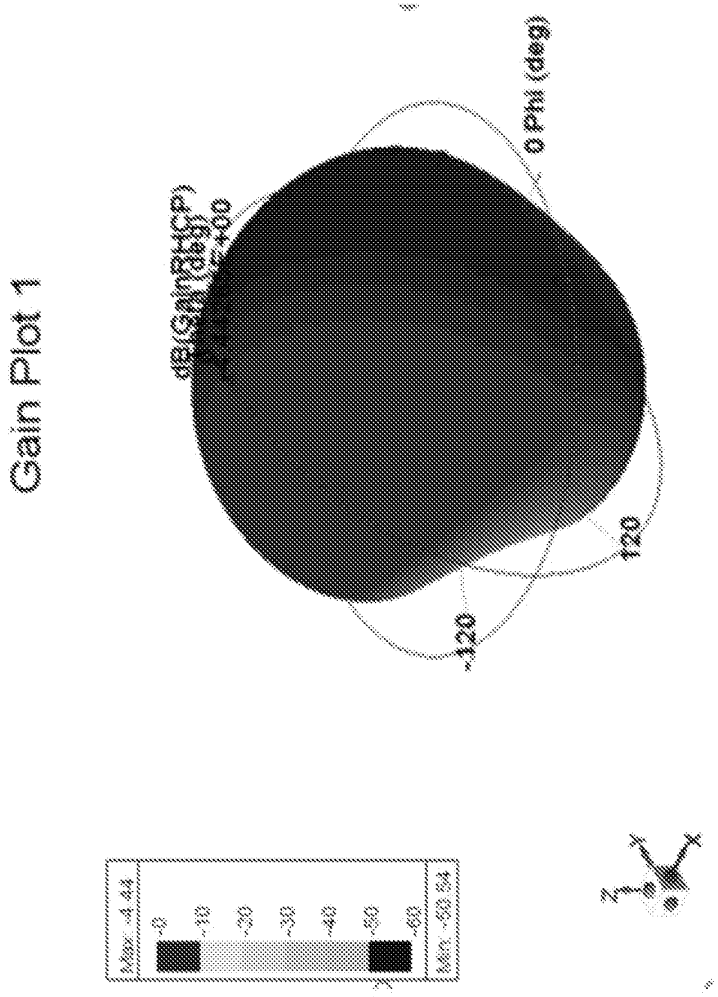

Fig. 14a

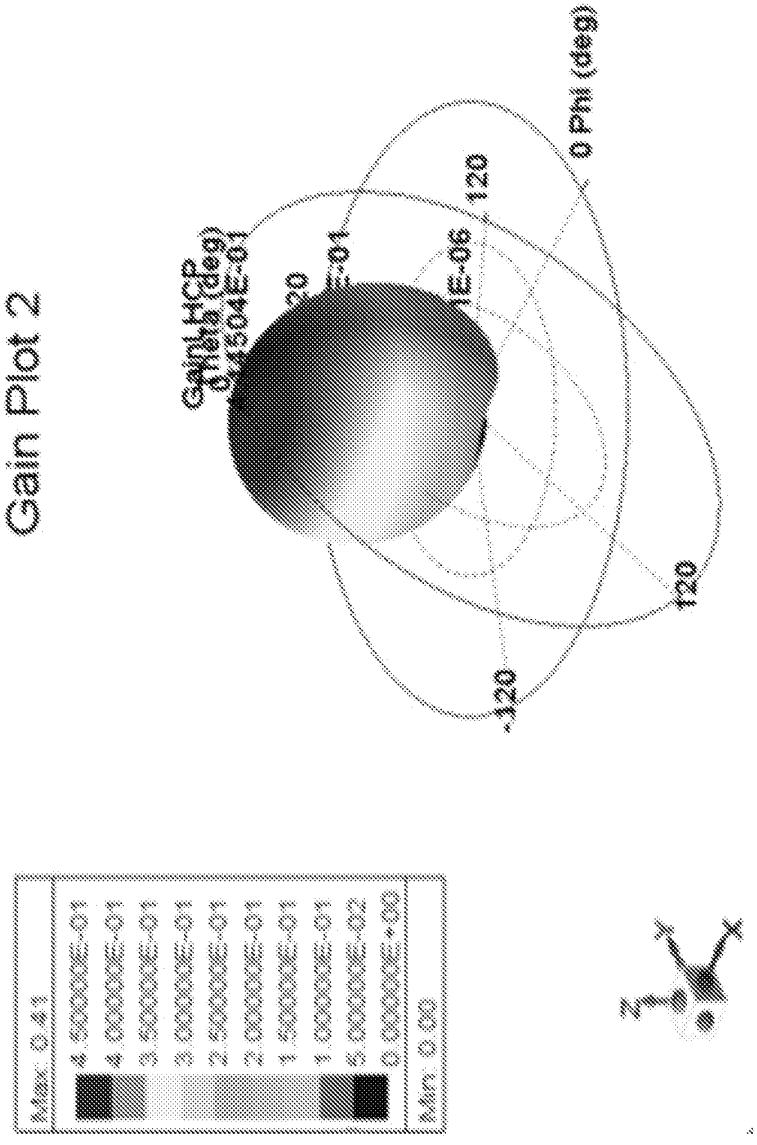
Gain Plot 2
Gain1 HCP
0 Phi (deg)
120
-120
Max: 0.41
4.50000E-01
4.00000E-01
3.50000E-01
3.00000E-01
2.50000E-01
2.00000E-01
1.50000E-01
1.00000E-01
5.00000E-02
0.00000E+00
Min: 0.00

Fig. 14b

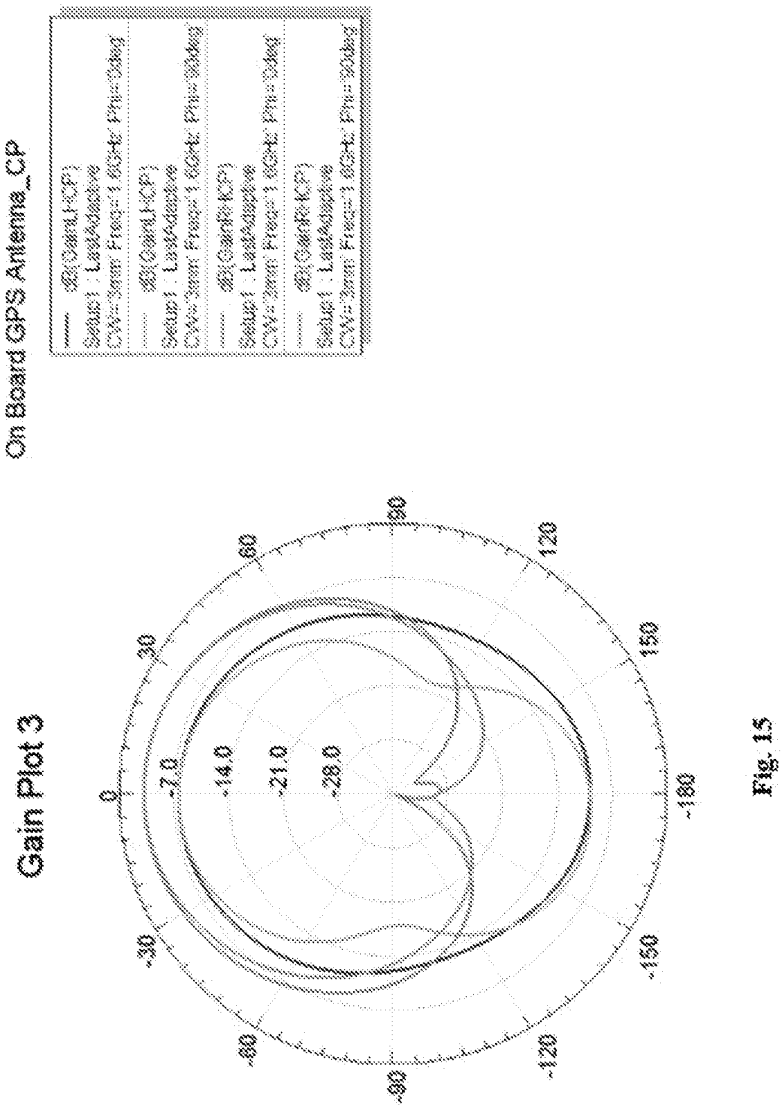
On Board GPS Antenna_CP
dB(GainLHCP)
Setup1 : LastAdaptive
CW=3mm Freq=1.6GHz Phi=0deg
dB(GainLHCP)
Setup1 : LastAdaptive
CW=3mm Freq=1.6GHz Phi=90deg
dB(GainRHCP)
Setup1 : LastAdaptive
CW=3mm Freq=1.6GHz Phi=0deg
dB(GainRHCP)
Setup1 : LastAdaptive
CW=3mm Freq=1.6GHz Phi=90deg
Gain Plot 3
-14.0
-21.0
-28.0
-7.0
0
30
60
90
120
150
180
-150
-120
-90
-60
-30

Fig. 15