2 1 JUN 2002
20020378 51

(12) INTERNATIONAL APPLICATION PUBLISHED UNDER THE PATENT COOPERATION TREATY (PCT)

(19) World Intellectual Property Organization
International Bureau

(43) International Publication Date
28 June 2001 (28.06.2001)

PCT

(10) International Publication Number
WO 01/46963 A1

(51) International Patent Classification[7]: H01B 3/46, H01L 21/312

(21) International Application Number: PCT/US00/34689

(22) International Filing Date:
21 December 2000 (21.12.2000)

(25) Filing Language: English

(26) Publication Language: English

(30) Priority Data:
09/471,299 23 December 1999 (23.12.1999) US

(71) Applicant: ALLIEDSIGNAL INC. [US/US]; 101 Columbia Avenue, P.O. Box 2245, Morristown, NJ 07960 (US).

(72) Inventors: CHEN, Tian-An; 1889 Misty Woods Drive, Duluth, GA 30097 (US). WU, Hui-Jung; 38770 Buckboard Common, Fremont, CA 94536 (US). GEORGE, Anna, M.; 209 S. Bayview Avenue, Sunnyvale, CA 94086 (US). KREISTLER, Lau, S., Y.; 871 Rubis Drive, Sunnyvale, CA 94087 (US).

(74) Agents: CRISS, Roger, H. et al.; AlliedSignal Inc., 101 Columbia Avenue, P.O. Box 2245, Morristown, NJ 07960 (US).

(81) Designated States *(national)*: AE, AL, AM, AT, AU, AZ, BA, BB, BG, BR, BY, CA, CH, CN, CR, CU, CZ, DE, DK, DM, EE, ES, FI, GB, GD, GE, GH, GM, HR, HU, ID, IL, IN, IS, JP, KE, KG, KP, KR, KZ, LC, LK, LR, LS, LT, LU, LV, MA, MD, MG, MK, MN, MW, MX, NO, NZ, PL, PT, RO, RU, SD, SE, SG, SI, SK, SL, TJ, TM, TR, TT, TZ, UA, UG, UZ, VN, YU, ZA, ZW.

(84) Designated States *(regional)*: ARIPO patent (GH, GM, KE, LS, MW, MZ, SD, SL, SZ, TZ, UG, ZW), Eurasian patent (AM, AZ, BY, KG, KZ, MD, RU, TJ, TM), European patent (AT, BE, CH, CY, DE, DK, ES, FI, FR, GB, GR, IE, IT, LU, MC, NL, PT, SE, TR), OAPI patent (BF, BJ, CF, CG, CI, CM, GA, GN, GW, ML, MR, NE, SN, TD, TG).

Published:
— *With international search report.*

[Continued on next page]

(54) Title: POLYCARBOSILANE ADHESION PROMOTERS FOR LOW DIELECTRIC CONSTANT POLYMERIC MATERIALS

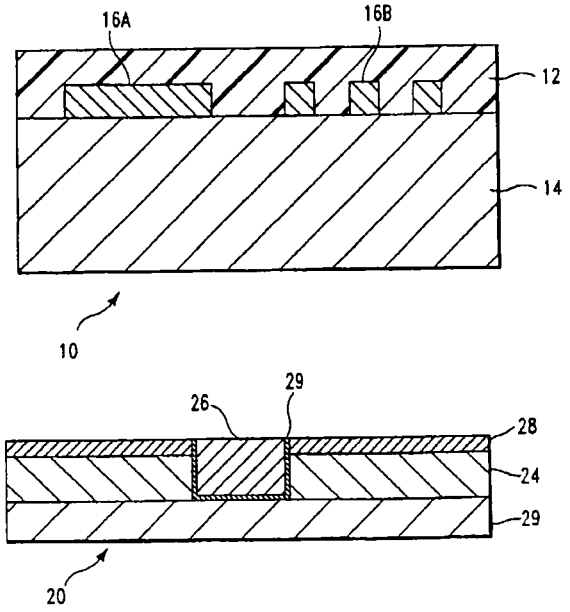

162162

ACTION

(57) Abstract: The adhesion of low k poly(arylene ether) dielectric coating compositions is effectively enhanced by a polycarbosilane promoter additive or primer. A coating composition is prepared by (a) providing a poly(arylene ether) composition; and (b) adding to said composition a small effective adhesion promoting amount of certain polycarbosilanes. The adhesion enhanced coating compositions are cured by heat treatment at temperatures in excess of 50 °C to form a polycarbosilane-modified poly(arylene ether) polymer composition having a low k dielectric constant for use in semiconductor devices.

WO 01/46963 A1

For two-letter codes and other abbreviations, refer to the "Guidance Notes on Codes and Abbreviations" appearing at the beginning of each regular issue of the PCT Gazette.