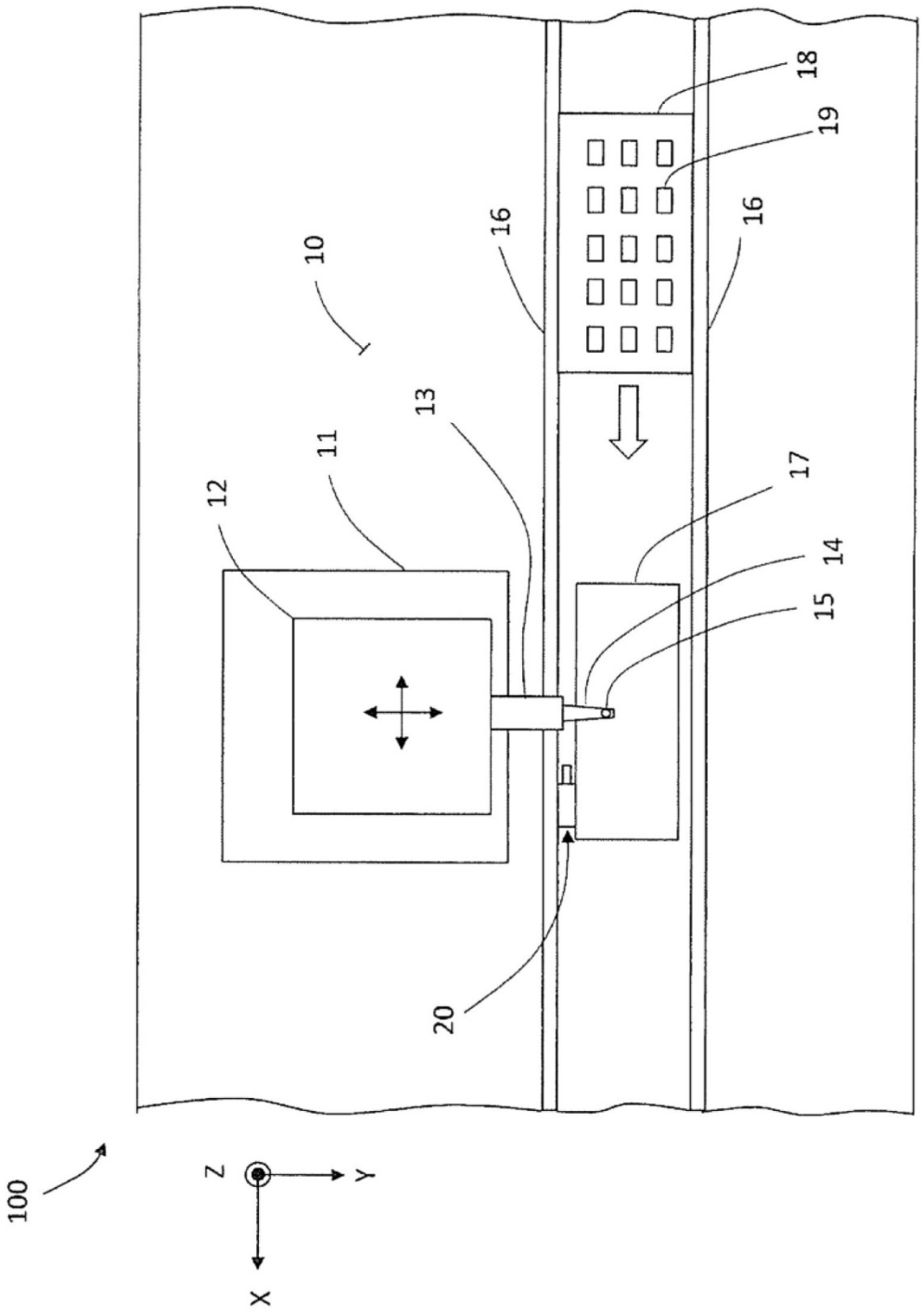

FIG. 1

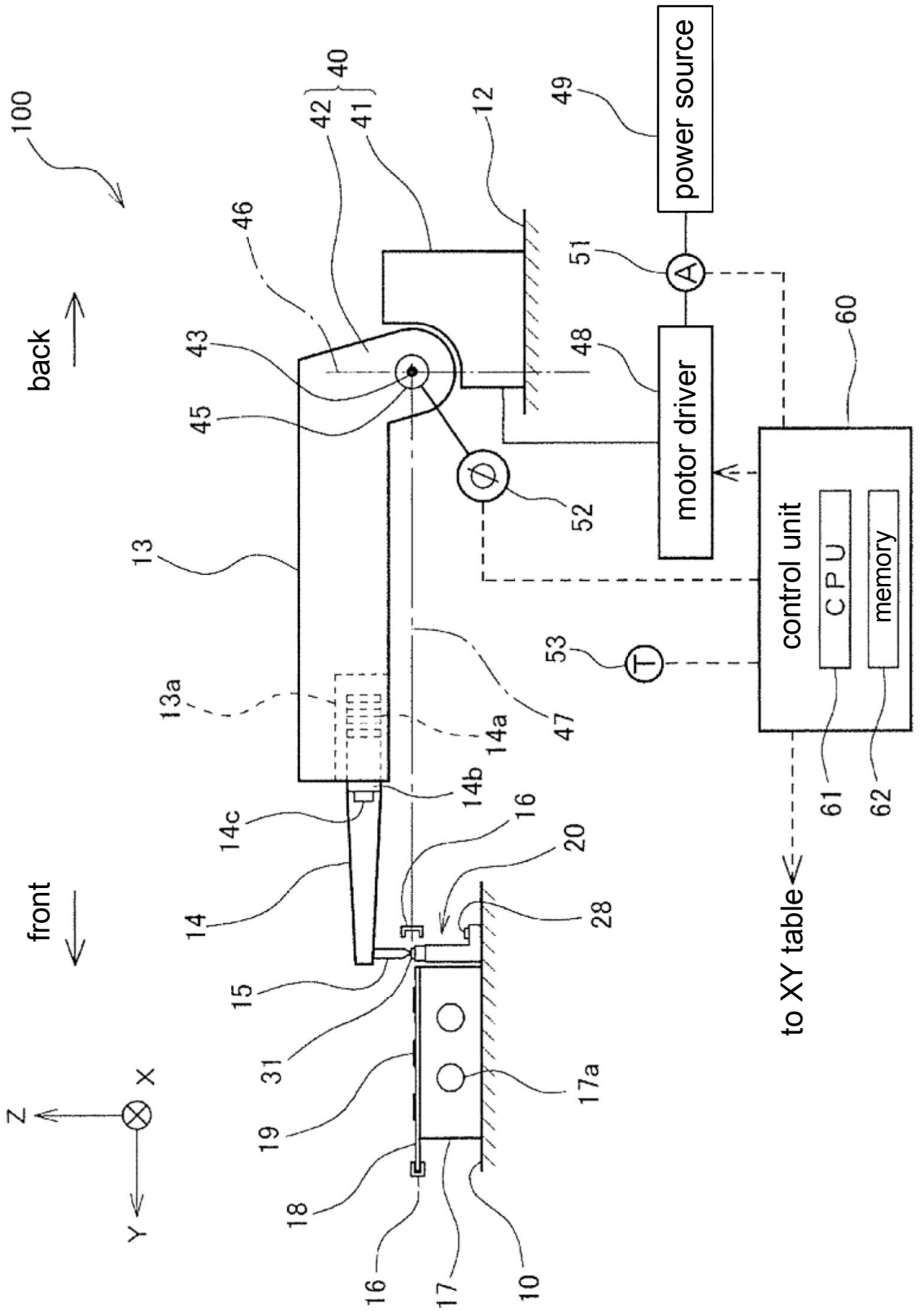
100
back
front
Z
X
Y
40
42
41
12
49
power source
46
51
A
43
48
motor driver
60
45
52
13
control unit
CPU
memory
53
T
13a
14a
47
14b
14c
16
20
14
28
15
31
19
17a
18
16
17
10
61
62
to XY table

FIG. 2

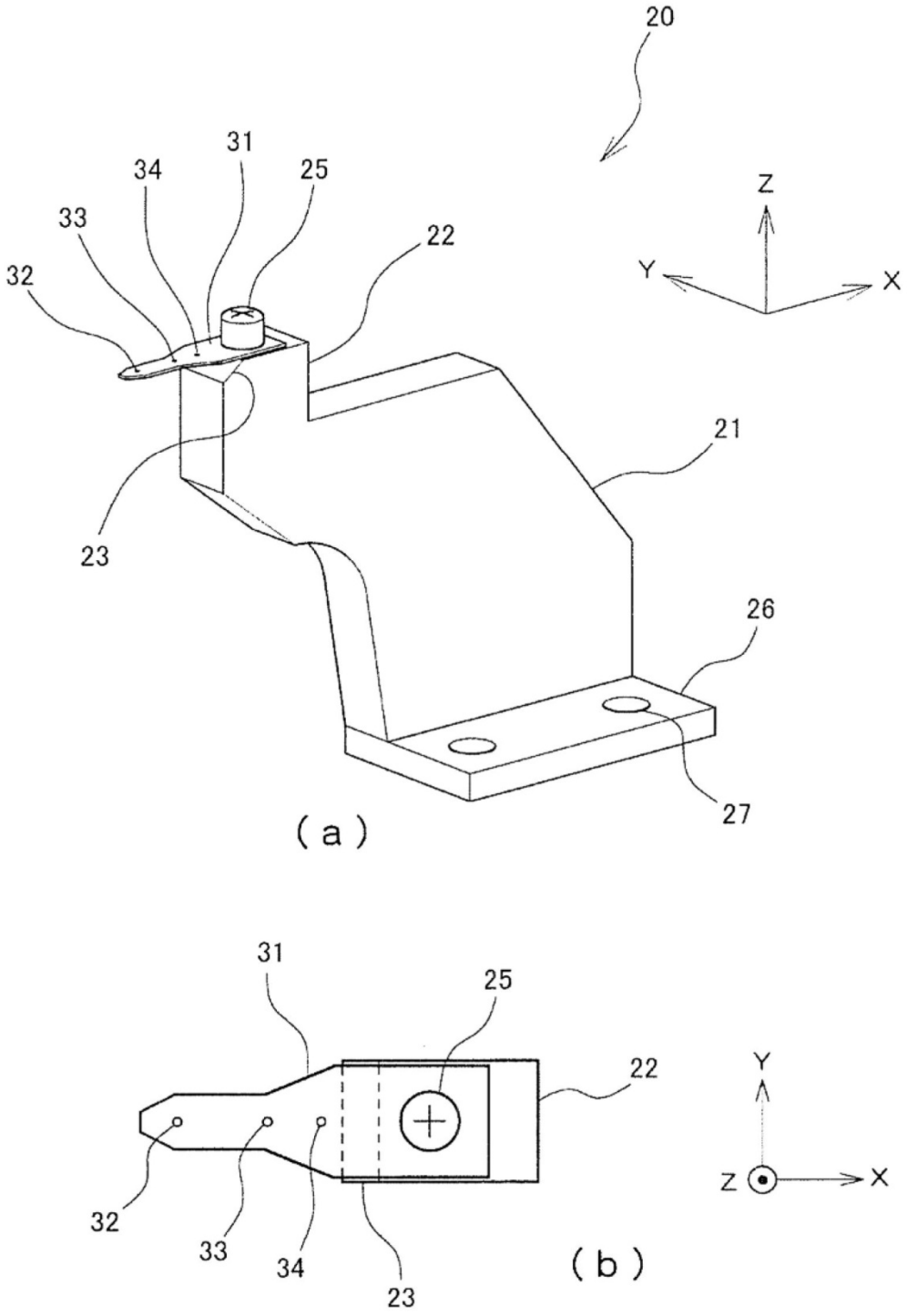

FIG. 3

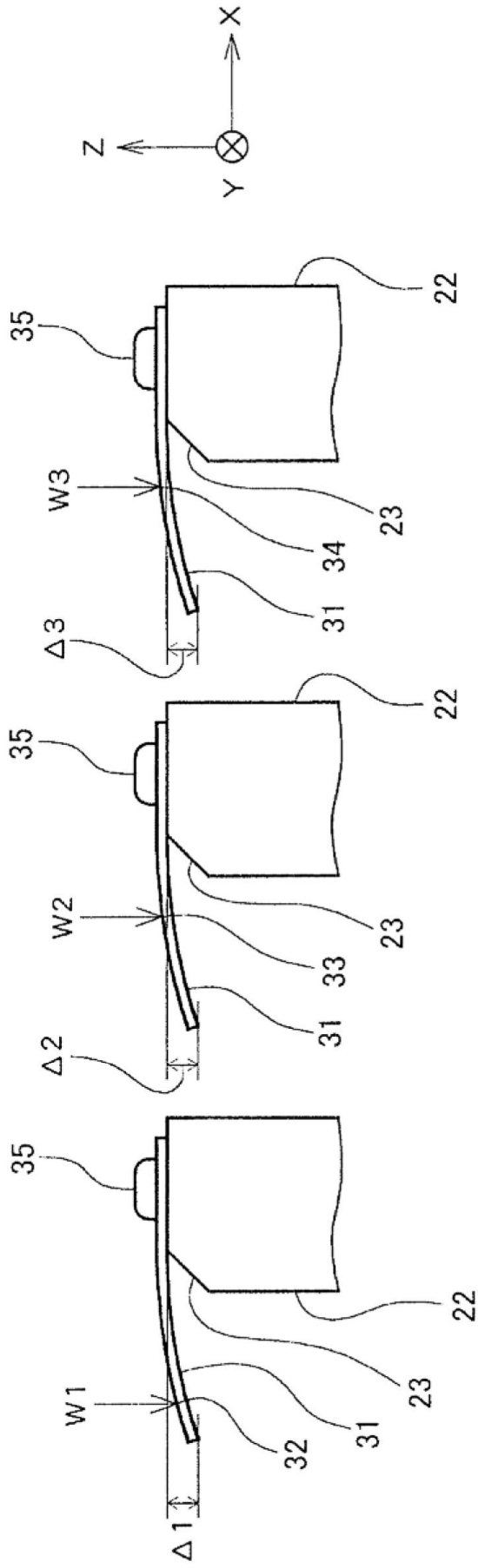

FIG. 4

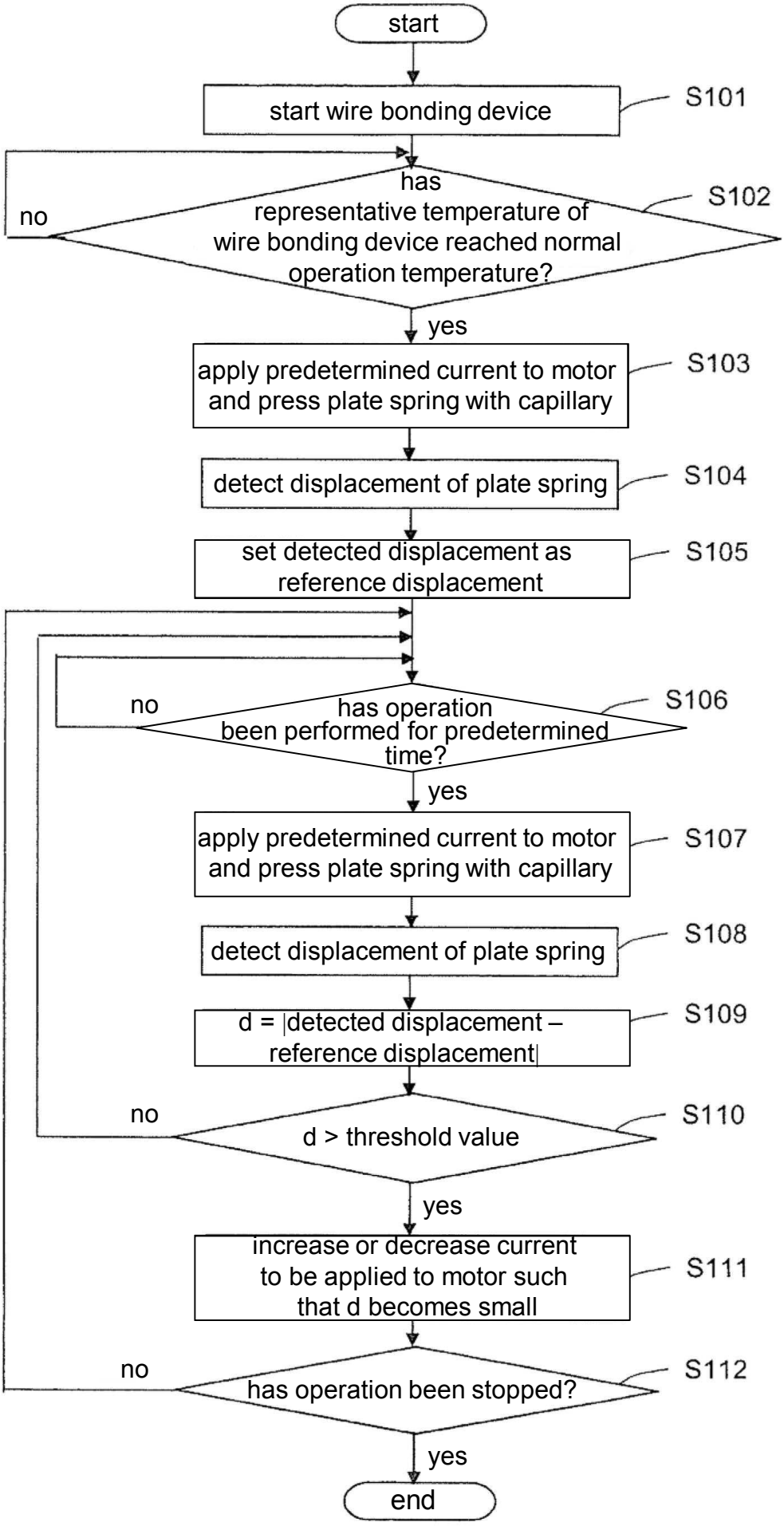
start
start wire bonding device
S101
has representative temperature of wire bonding device reached normal operation temperature?
S102
no
yes
apply predetermined current to motor and press plate spring with capillary
S103
detect displacement of plate spring
S104
set detected displacement as reference displacement
S105
has operation been performed for predetermined time?
S106
no
yes
apply predetermined current to motor and press plate spring with capillary
S107
detect displacement of plate spring
S108
d = |detected displacement – reference displacement|
S109
d > threshold value
S110
no
yes
increase or decrease current to be applied to motor such that d becomes small
S111
has operation been stopped?
S112
no
yes
end

FIG. 5

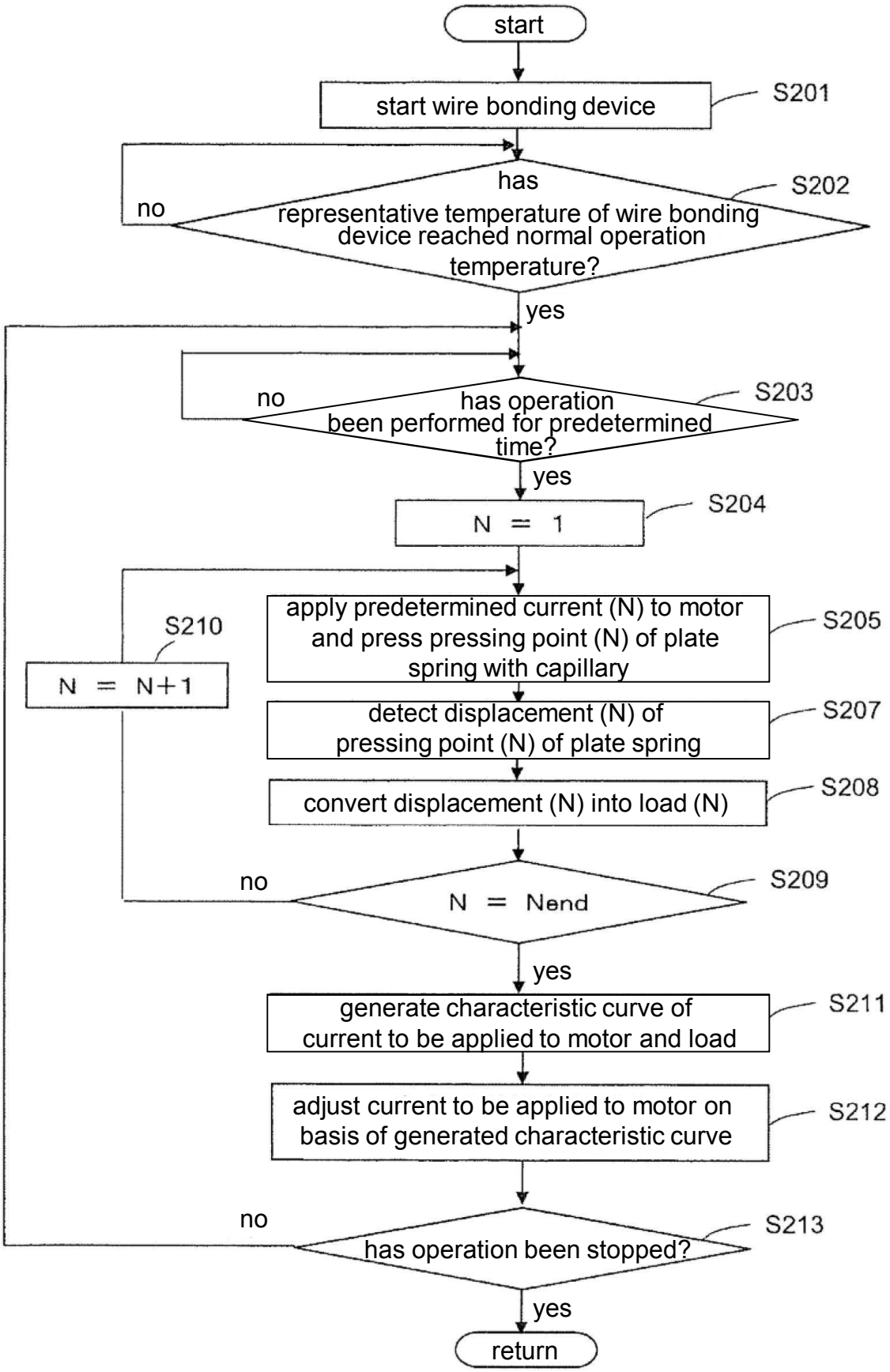
start
start wire bonding device
S201
has representative temperature of wire bonding device reached normal operation temperature?
S202
no
yes
has operation been performed for predetermined time?
S203
no
yes
N = 1
S204
apply predetermined current (N) to motor and press pressing point (N) of plate spring with capillary
S205
detect displacement (N) of pressing point (N) of plate spring
S207
convert displacement (N) into load (N)
S208
N = Nend
S209
no
yes
N = N+1
S210
generate characteristic curve of current to be applied to motor and load
S211
adjust current to be applied to motor on basis of generated characteristic curve
S212
has operation been stopped?
S213
no
yes
return

FIG. 6

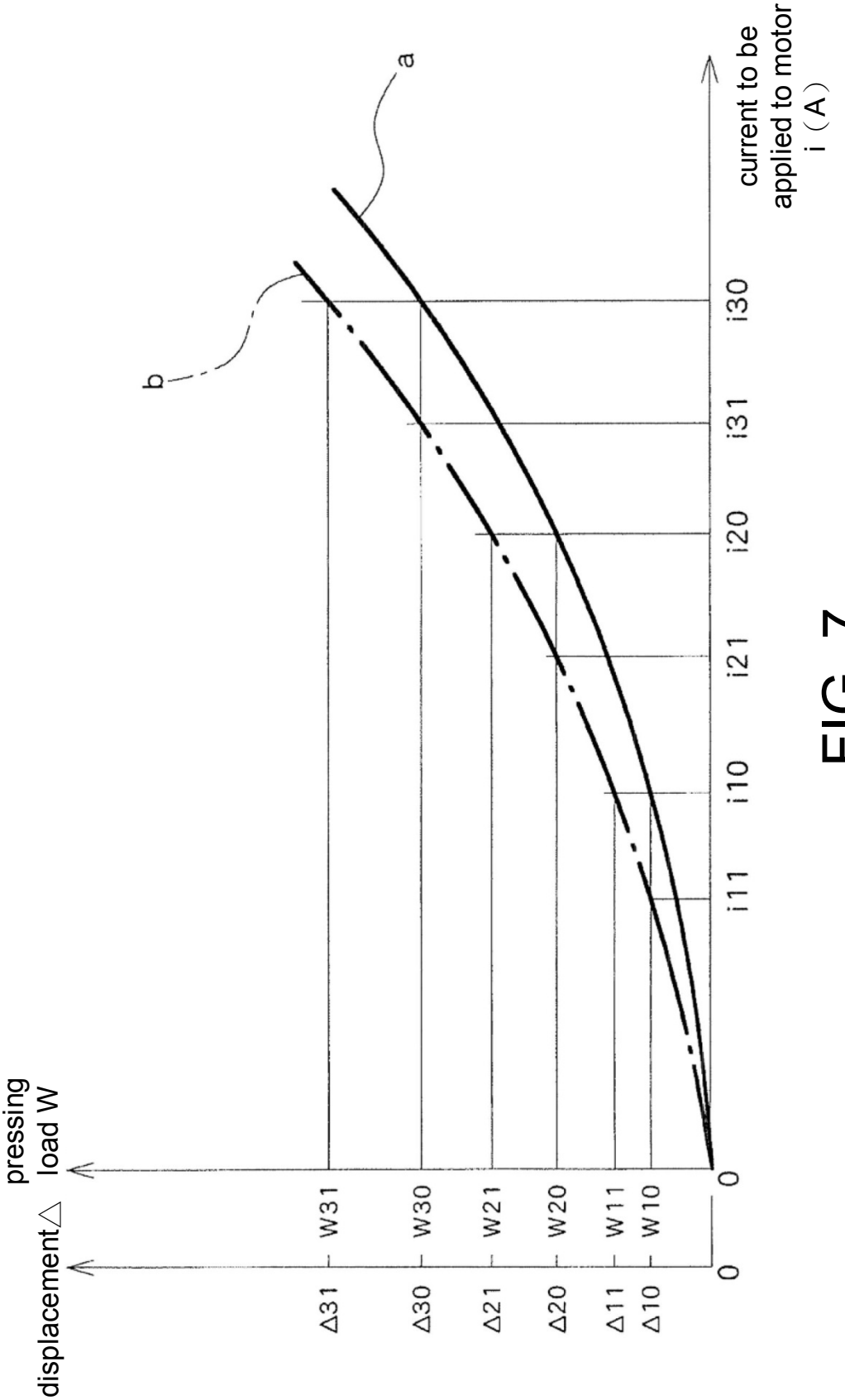
pressing load W
displacement△
W31
W30
W21
W20
W11
W10
Δ31
Δ30
Δ21
Δ20
Δ11
Δ10
0
0
i11
i10
i21
i20
i31
i30
current to be applied to motor i（A）
a
b

FIG. 7

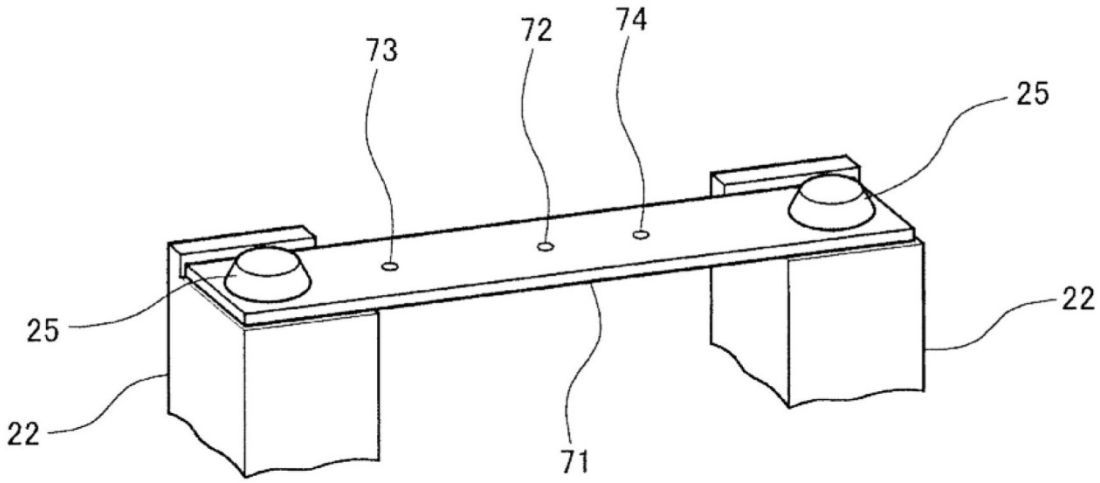

FIG. 8

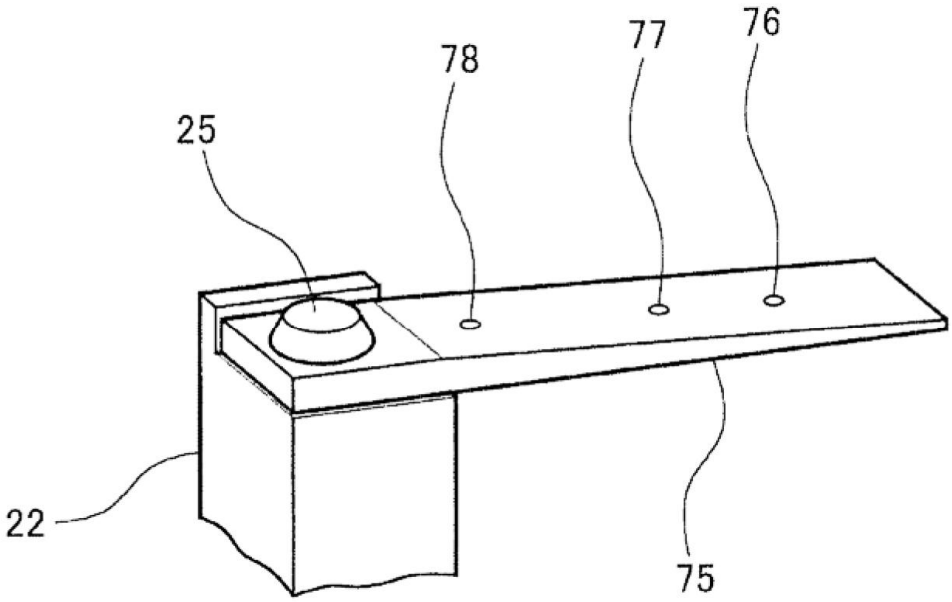

FIG. 9