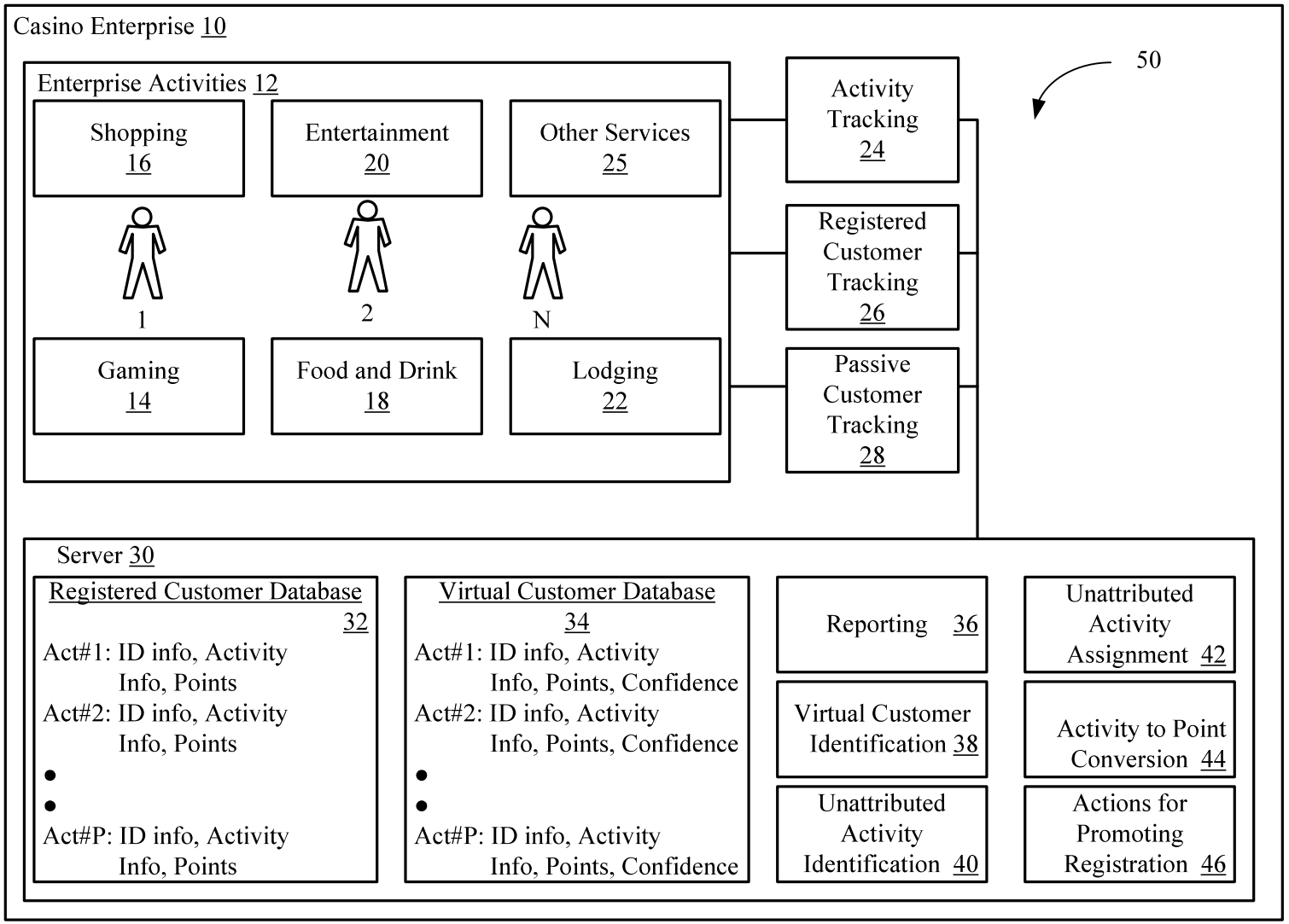
Casino Enterprise 10
Enterprise Activities 12
Shopping 16
Entertainment 20
Other Services 25
1
2
N
Gaming 14
Food and Drink 18
Lodging 22
50
Activity Tracking 24
Registered Customer Tracking 26
Passive Customer Tracking 28
Server 30
Registered Customer Database 32
Act#1: ID info, Activity Info, Points
Act#2: ID info, Activity Info, Points
Act#P: ID info, Activity Info, Points
Virtual Customer Database 34
Act#1: ID info, Activity Info, Points, Confidence
Act#2: ID info, Activity Info, Points, Confidence
Act#P: ID info, Activity Info, Points, Confidence
Reporting 36
Virtual Customer Identification 38
Unattributed Activity Identification 40
Unattributed Activity Assignment 42
Activity to Point Conversion 44
Actions for Promoting Registration 46

Fig. 1

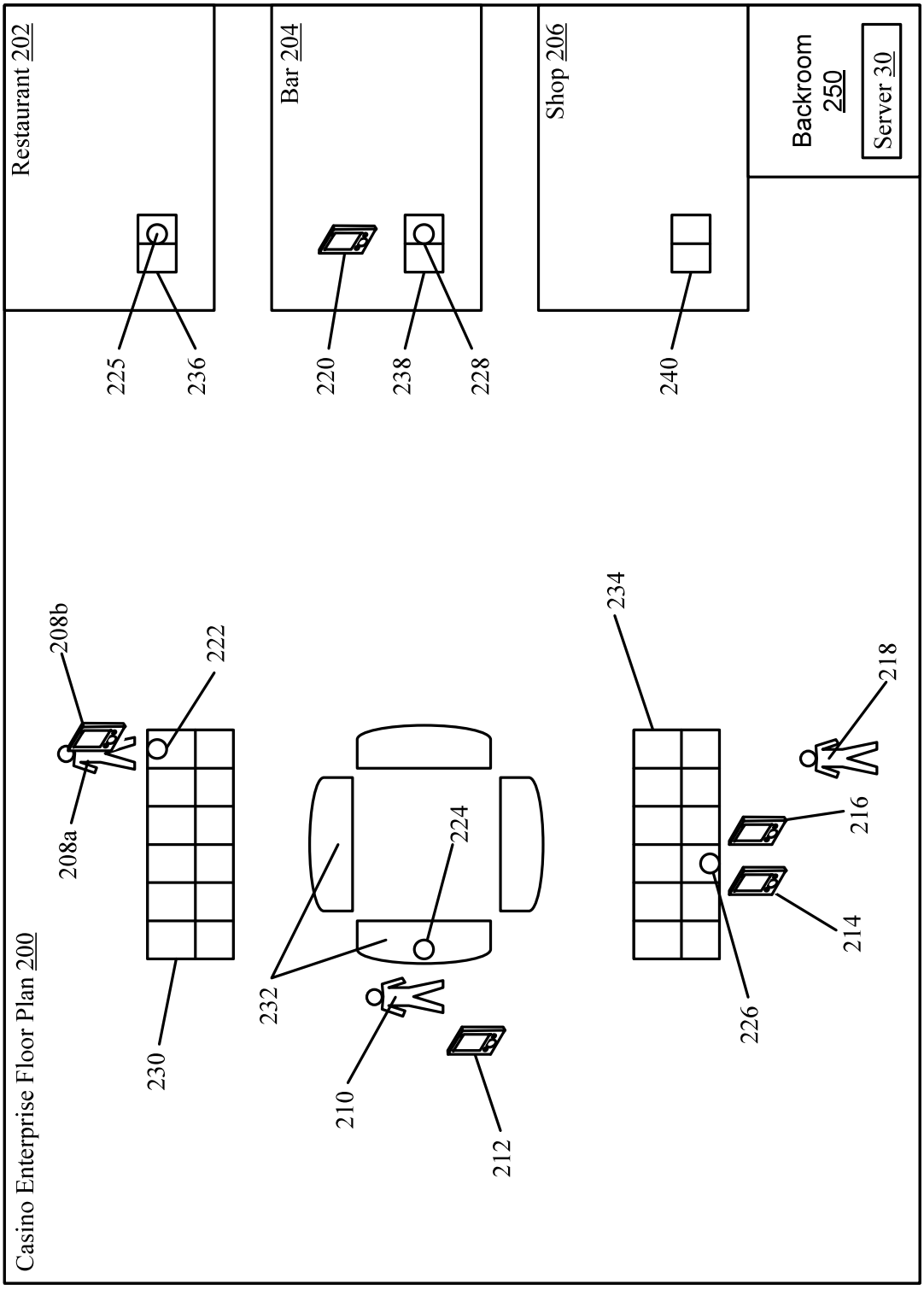
Casino Enterprise Floor Plan 200
Restaurant 202
Bar 204
Shop 206
Backroom 250
Server 30
208a
208b
210
212
214
216
218
220
222
224
225
226
228
230
232
234
236
238
240

Fig. 2

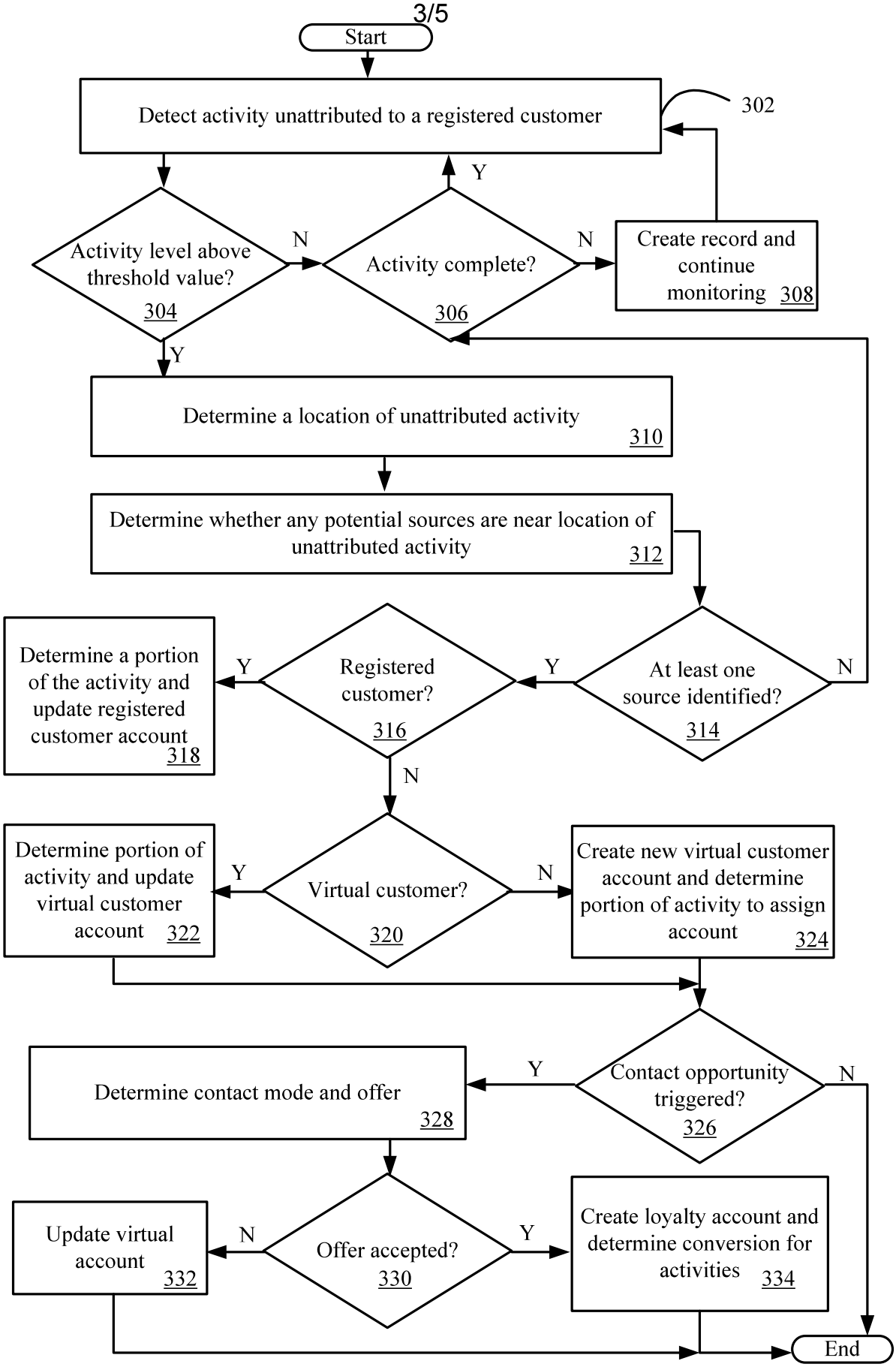
Start
Detect activity unattributed to a registered customer
302
Activity level above threshold value?
304
N
Y
Activity complete?
306
N
Y
Create record and continue monitoring 308
Determine a location of unattributed activity
310
Determine whether any potential sources are near location of unattributed activity
312
At least one source identified?
314
Y
N
Registered customer?
316
Y
N
Determine a portion of the activity and update registered customer account
318
Virtual customer?
320
Y
N
Determine portion of activity and update virtual customer account 322
Create new virtual customer account and determine portion of activity to assign account
324
Contact opportunity triggered?
326
Y
N
Determine contact mode and offer
328
Offer accepted?
330
N
Y
Update virtual account
332
Create loyalty account and determine conversion for activities 334
End

Fig. 3

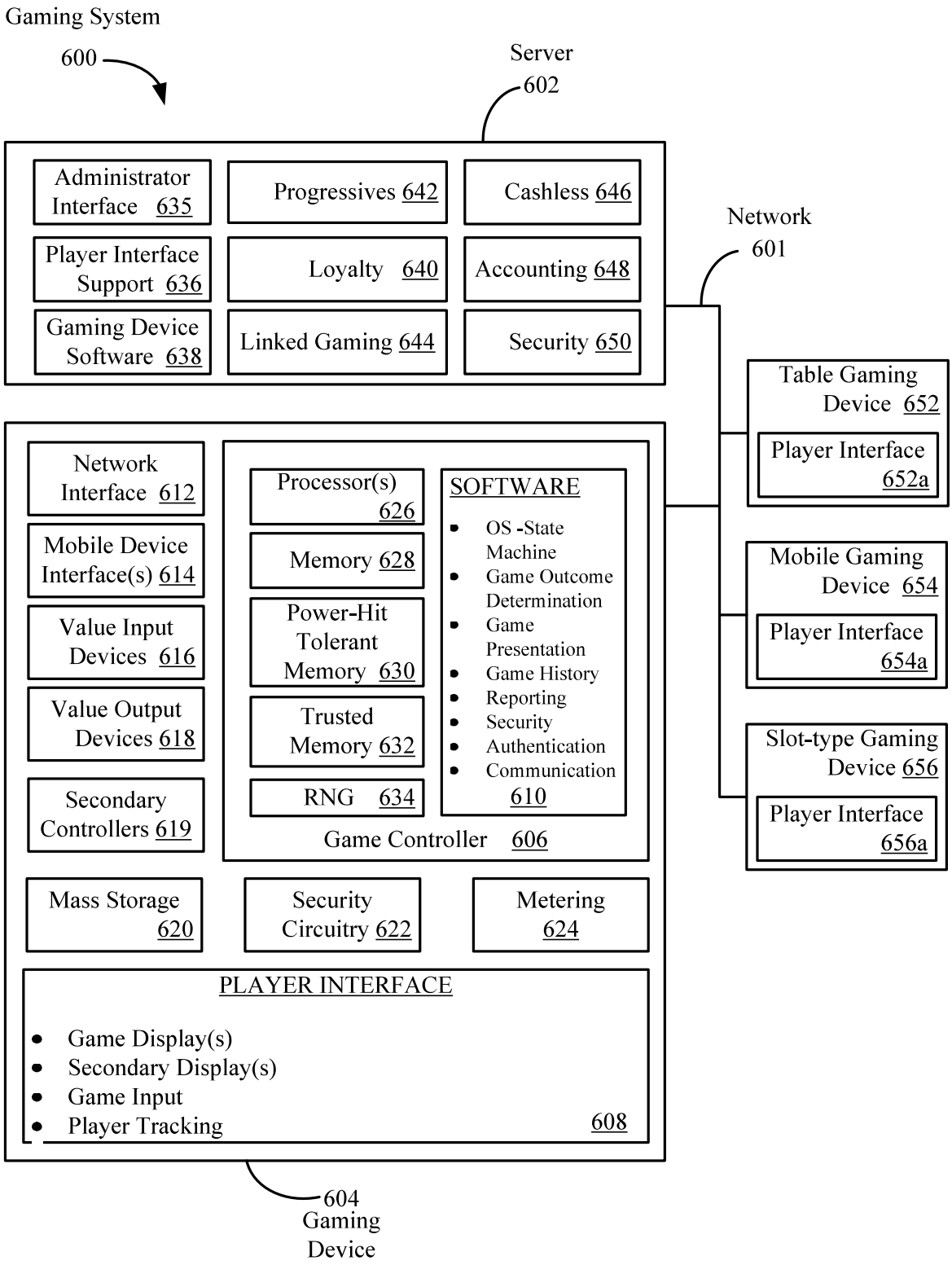
Gaming System
600
Server
602
Administrator Interface 635
Progressives 642
Cashless 646
Player Interface Support 636
Loyalty 640
Accounting 648
Gaming Device Software 638
Linked Gaming 644
Security 650
Network
601
Table Gaming Device 652
Player Interface 652a
Mobile Gaming Device 654
Player Interface 654a
Slot-type Gaming Device 656
Player Interface 656a
Network Interface 612
Mobile Device Interface(s) 614
Value Input Devices 616
Value Output Devices 618
Secondary Controllers 619
Processor(s) 626
Memory 628
Power-Hit Tolerant Memory 630
Trusted Memory 632
RNG 634
SOFTWARE
OS -State Machine
Game Outcome Determination
Game Presentation
Game History
Reporting
Security
Authentication
Communication
610
Game Controller 606
Mass Storage 620
Security Circuitry 622
Metering 624
PLAYER INTERFACE
Game Display(s)
Secondary Display(s)
Game Input
Player Tracking
608
604
Gaming Device

Fig. 4

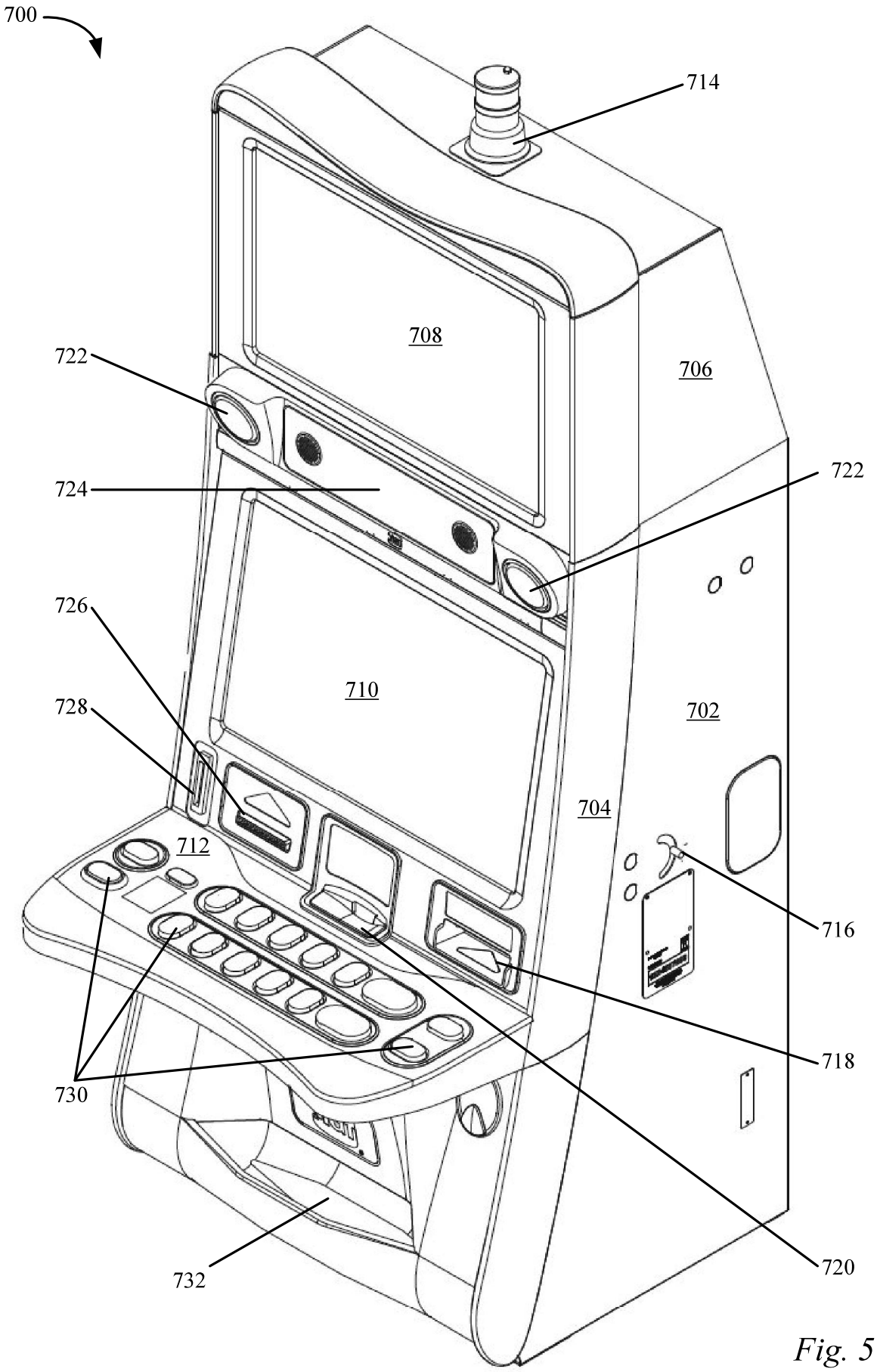
700
714
708
706
722
724
722
726
710
728
702
704
712
716
718
730
720
732

Fig. 5