(12) INTERNATIONAL APPLICATION PUBLISHED UNDER THE PATENT COOPERATION TREATY (PCT)

(19) World Intellectual Property Organization
International Bureau

(43) International Publication Date
16 December 2010 (16.12.2010)

PCT

(10) International Publication Number
WO 2010/144036 A1

(51) International Patent Classification:
G01N 35/10 (2006.01) *G01N 30/82* (2006.01)

(21) International Application Number:
PCT/SE2010/050621

(22) International Filing Date:
4 June 2010 (04.06.2010)

(25) Filing Language: English

(26) Publication Language: English

(30) Priority Data:
0950430-9 9 June 2009 (09.06.2009) SE

(71) Applicant *(for all designated States except US)*: **GE HEALTHCARE BIO-SCIENCES AB** [SE/SE]; Patent Department, Björkgatan 30, S-751 84 Uppsala (SE).

(72) Inventor; and

(75) Inventor/Applicant *(for US only)*: **FRÖJDH, Håkan** [SE/SE]; GE Healthcare, Björkgatan 30, S-751 84 Uppsala (SE).

(74) Agents: **GE HEALTHCARE BIO-SCIENCES AB** et al.; Patent Department, Björkgatan 30, S-751 84 Uppsala (SE).

(81) Designated States *(unless otherwise indicated, for every kind of national protection available)*: AE, AG, AL, AM, AO, AT, AU, AZ, BA, BB, BG, BH, BR, BW, BY, BZ, CA, CH, CL, CN, CO, CR, CU, CZ, DE, DK, DM, DO, DZ, EC, EE, EG, ES, FI, GB, GD, GE, GH, GM, GT, HN, HR, HU, ID, IL, IN, IS, JP, KE, KG, KM, KN, KP, KR, KZ, LA, LC, LK, LR, LS, LT, LU, LY, MA, MD, ME, MG, MK, MN, MW, MX, MY, MZ, NA, NG, NI, NO, NZ, OM, PE, PG, PH, PL, PT, RO, RS, RU, SC, SD, SE, SG, SK, SL, SM, ST, SV, SY, TH, TJ, TM, TN, TR, TT, TZ, UA, UG, US, UZ, VC, VN, ZA, ZM, ZW.

(84) Designated States *(unless otherwise indicated, for every kind of regional protection available)*: ARIPO (BW, GH, GM, KE, LR, LS, MW, MZ, NA, SD, SL, SZ, TZ, UG, ZM, ZW), Eurasian (AM, AZ, BY, KG, KZ, MD, RU, TJ, TM), European (AL, AT, BE, BG, CH, CY, CZ, DE, DK, EE, ES, FI, FR, GB, GR, HR, HU, IE, IS, IT, LT, LU, LV, MC, MK, MT, NL, NO, PL, PT, RO, SE, SI, SK, SM, TR), OAPI (BF, BJ, CF, CG, CI, CM, GA, GN, GQ, GW, ML, MR, NE, SN, TD, TG).

Published:

— *with international search report (Art. 21(3))*

(54) **Title**: DEVICE FOR REDUCING LOSS OF LIQUID DURING FRACTION COLLECTION

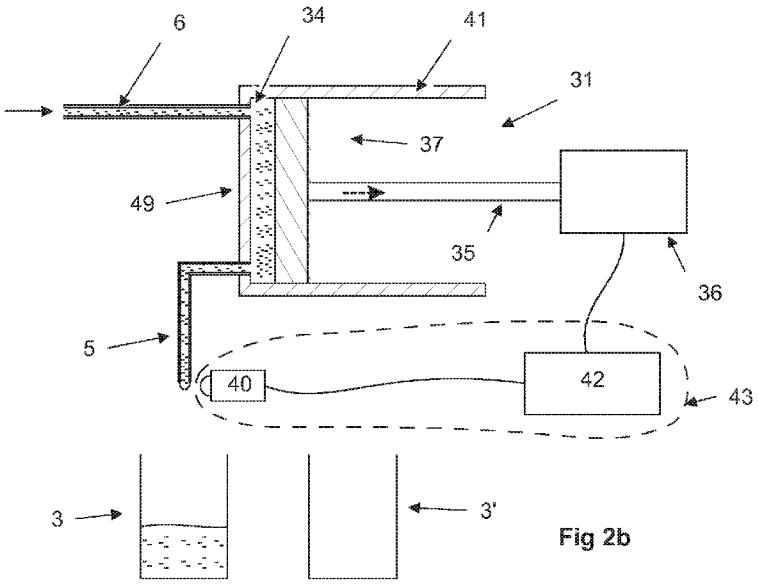

Fig 2b

(57) **Abstract**: A fraction collector comprising a liquid holding means (31) wherein it further comprises a fluid front control arrangement (43) arranged for locating the fluid front at a dispensing nozzle (5) and to control the liquid holding means (31) to keep the fluid front at a predetermined position.

WO 2010/144036 A1