(12) INTERNATIONAL APPLICATION PUBLISHED UNDER THE PATENT COOPERATION TREATY (PCT)

(19) World Intellectual Property Organization
International Bureau

(43) International Publication Date
10 September 2004 (10.09.2004)

PCT

(10) International Publication Number
WO 2004/077589 A3

(51) International Patent Classification[7]: H02J 7/00

(21) International Application Number:
PCT/US2004/004035

(22) International Filing Date: 11 February 2004 (11.02.2004)

(25) Filing Language: English

(26) Publication Language: English

(30) Priority Data:
10/371,922 21 February 2003 (21.02.2003) US

(71) Applicant *(for all designated States except US)*: **THOMSON LICENSING S.A.** [FR/FR]; 46 Quai A. LeGallo, F-92648 Boulogne (FR).

(72) Inventor; and

(75) Inventor/Applicant *(for US only)*: **MCNEILL, James, Thomas** [US/US]; 6588 Pointe East Court, Indianapolis, IN 46250 (US).

(74) Agents: **TRIPOLI, Joseph, S.** et al.; Two Independence Way, Suite #200, Princeton, NJ 08540 (US).

(81) Designated States *(unless otherwise indicated, for every kind of national protection available)*: AE, AG, AL, AM, AT, AU, AZ, BA, BB, BG, BR, BW, BY, BZ, CA, CH, CN, CO, CR, CU, CZ, DE, DK, DM, DZ, EC, EE, EG, ES, FI, GB, GD, GE, GH, GM, HR, HU, ID, IL, IN, IS, JP, KE, KG, KP, KR, KZ, LC, LK, LR, LS, LT, LU, LV, MA, MD, MG, MK, MN, MW, MX, MZ, NA, NI, NO, NZ, OM, PG, PH, PL, PT, RO, RU, SC, SD, SE, SG, SK, SL, SY, TJ, TM, TN, TR, TT, TZ, UA, UG, US, UZ, VC, VN, YU, ZA, ZM, ZW.

(84) Designated States *(unless otherwise indicated, for every kind of regional protection available)*: ARIPO (BW, GH, GM, KE, LS, MW, MZ, SD, SL, SZ, TZ, UG, ZM, ZW), Eurasian (AM, AZ, BY, KG, KZ, MD, RU, TJ, TM), European (AT, BE, BG, CH, CY, CZ, DE, DK, EE, ES, FI, FR, GB, GR, HU, IE, IT, LU, MC, NL, PT, RO, SE, SI, SK, TR), OAPI (BF, BJ, CF, CG, CI, CM, GA, GN, GQ, GW, ML, MR, NE, SN, TD, TG).

Published:
— *with international search report*

[Continued on next page]

(54) Title: BATTERY CHARGING APPARATUS

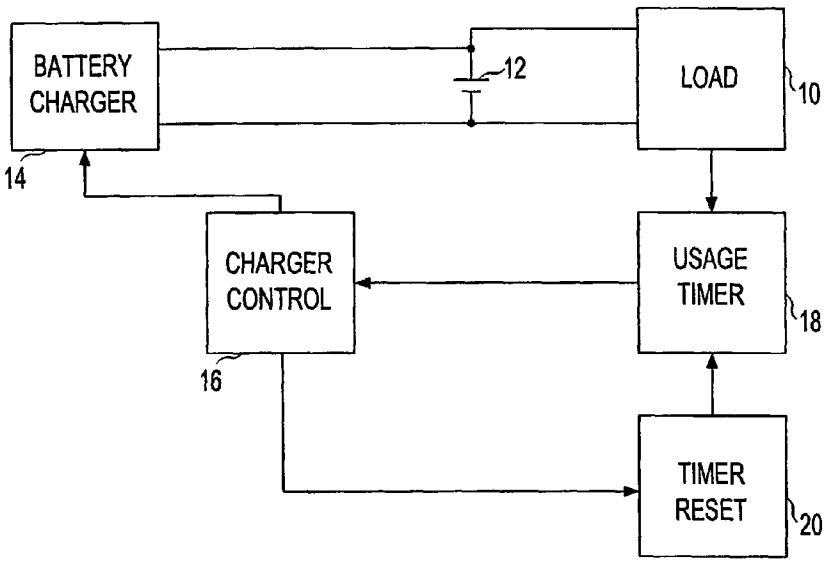

(57) Abstract: A load, such as a cordless telephone handset, is powered by a rechargeable battery. The battery is recharged, when the load is not in use, by a battery charger which is controlled by a usage timer which totals the amount of time that the load has drawn power from the battery since the last recharging cycle. The usage timer causes operation of the battery charger to be inhibited until after a predetermined cumulative use.

WO 2004/077589 A3

(88) Date of publication of the international search report:
27 January 2005

For two-letter codes and other abbreviations, refer to the "Guidance Notes on Codes and Abbreviations" appearing at the beginning of each regular issue of the PCT Gazette.