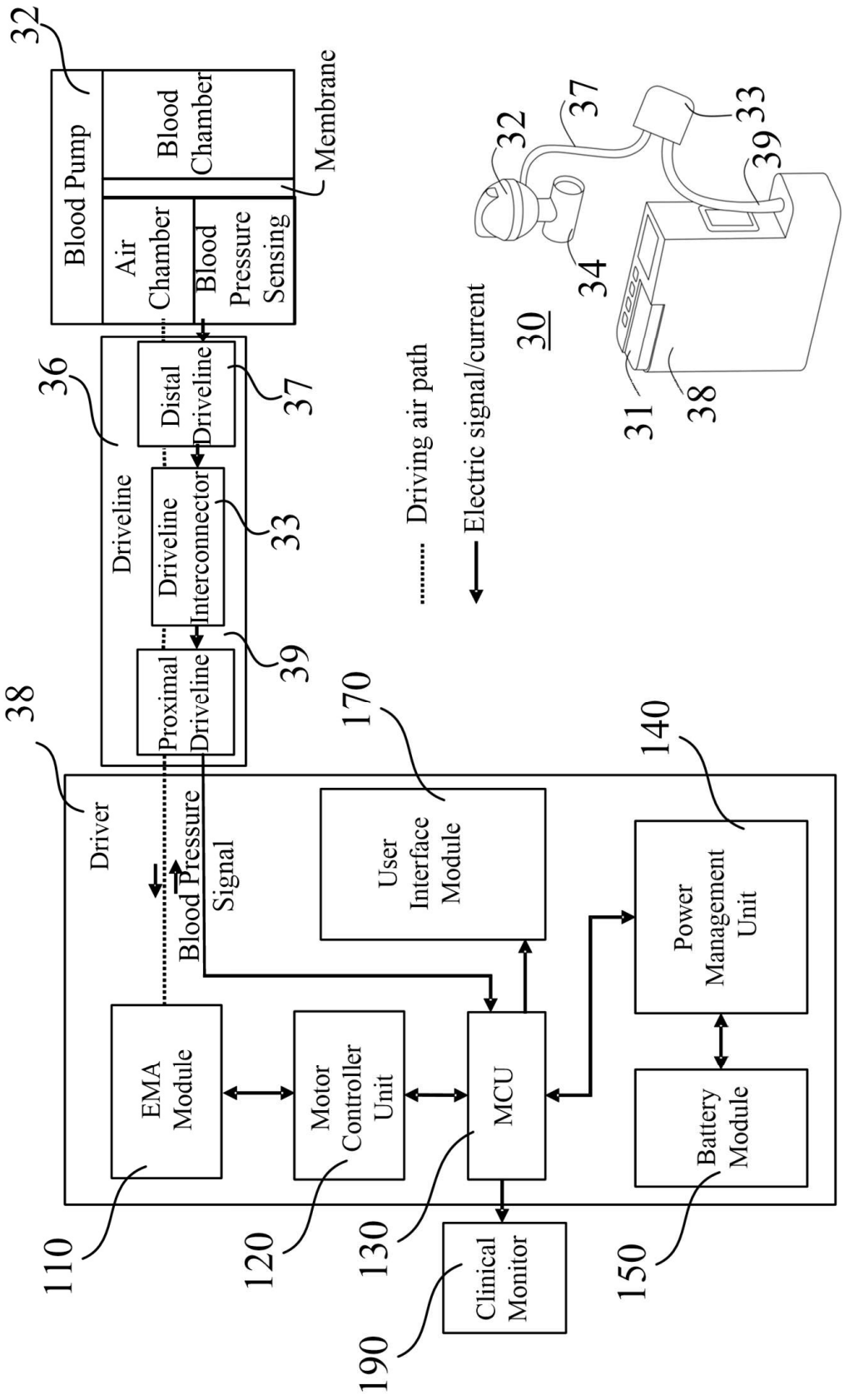
32
Blood Pump
Air Chamber
Blood Pressure Sensing
Blood Chamber
Membrane
36
Driveline
Proximal Driveline
Driveline Interconnector
Distal Driveline
37
33
39
38
Driver
Blood Pressure Signal
170
User Interface Module
140
Power Management Unit
EMA Module
Motor Controller Unit
MCU
Battery Module
110
120
130
150
Clinical Monitor
190
Driving air path
Electric signal/current
30
32
37
33
34
39
31
38

FIG. 10

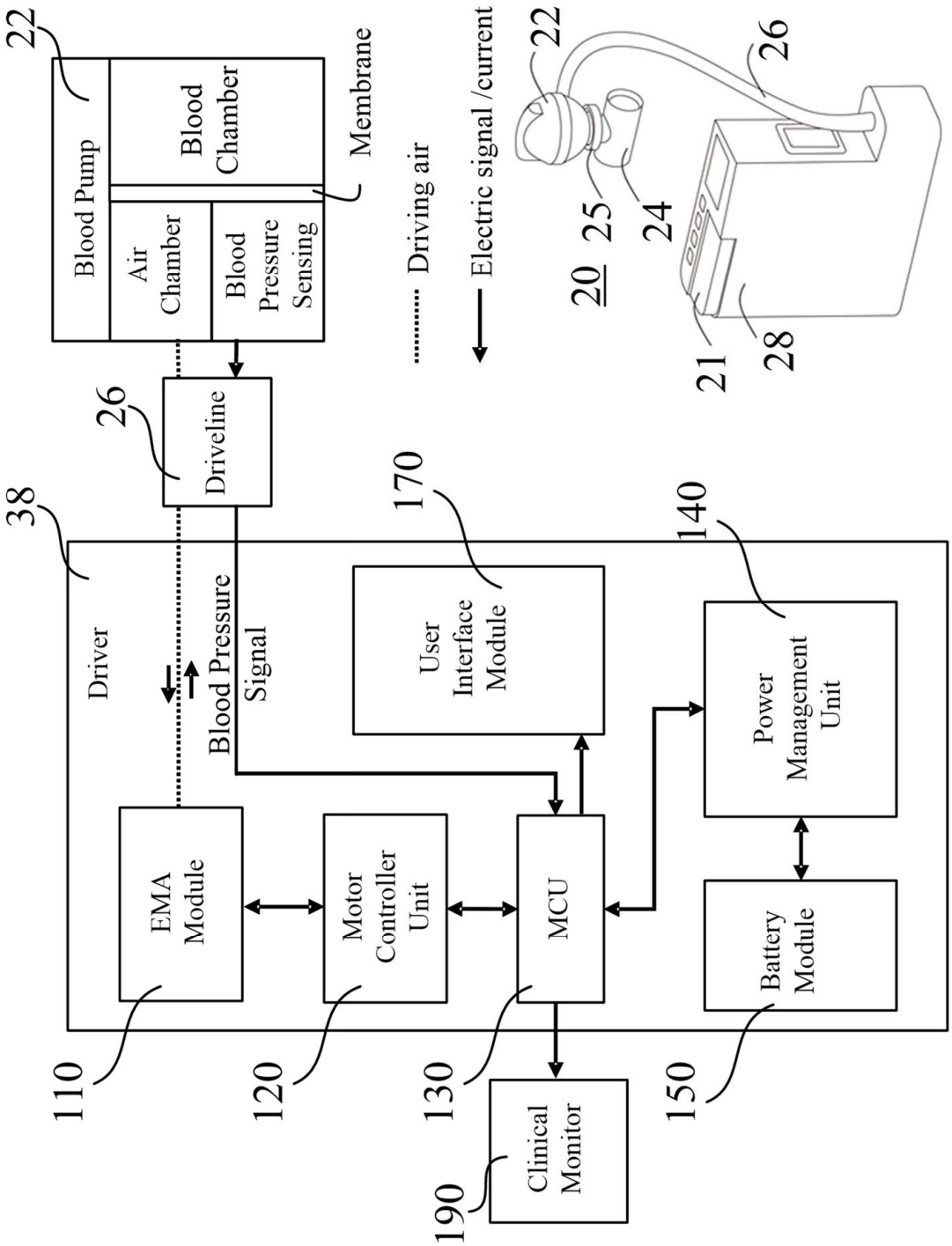
22
Blood Pump
Blood Chamber
Air Chamber
Blood Pressure Sensing
Membrane
Driving air
Electric signal /current
22
26
20
25
24
21
28
26
Driveline
38
Driver
Blood Pressure Signal
170
User Interface Module
140
Power Management Unit
EMA Module
Motor Controller Unit
MCU
Battery Module
110
120
130
150
Clinical Monitor
190

FIG. 11

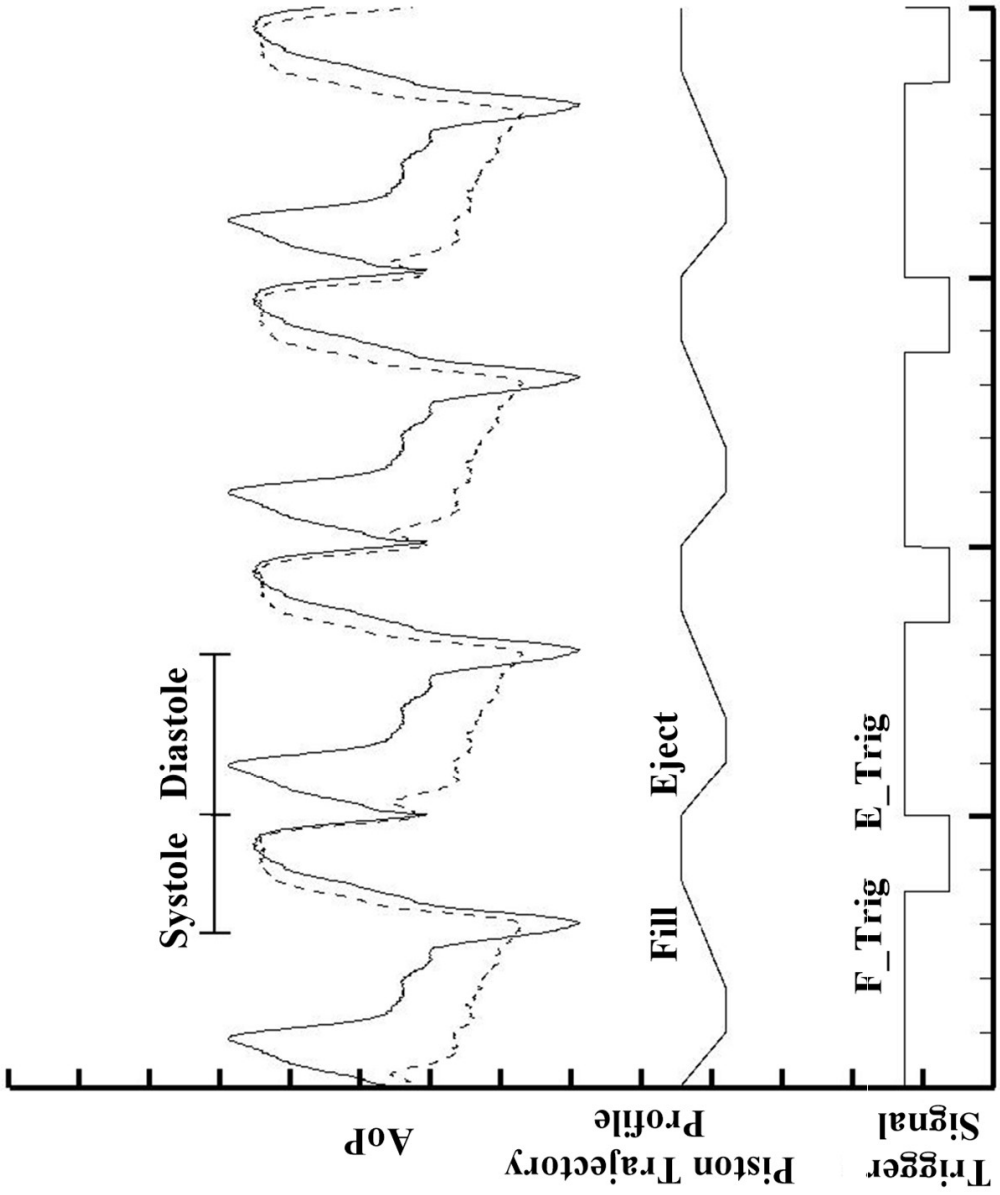
Systole
Diastole
AoP
Fill
Eject
Piston Trajectory
Profile
F_Trig
E_Trig
Trigger
Signal
Time

FIG. 12