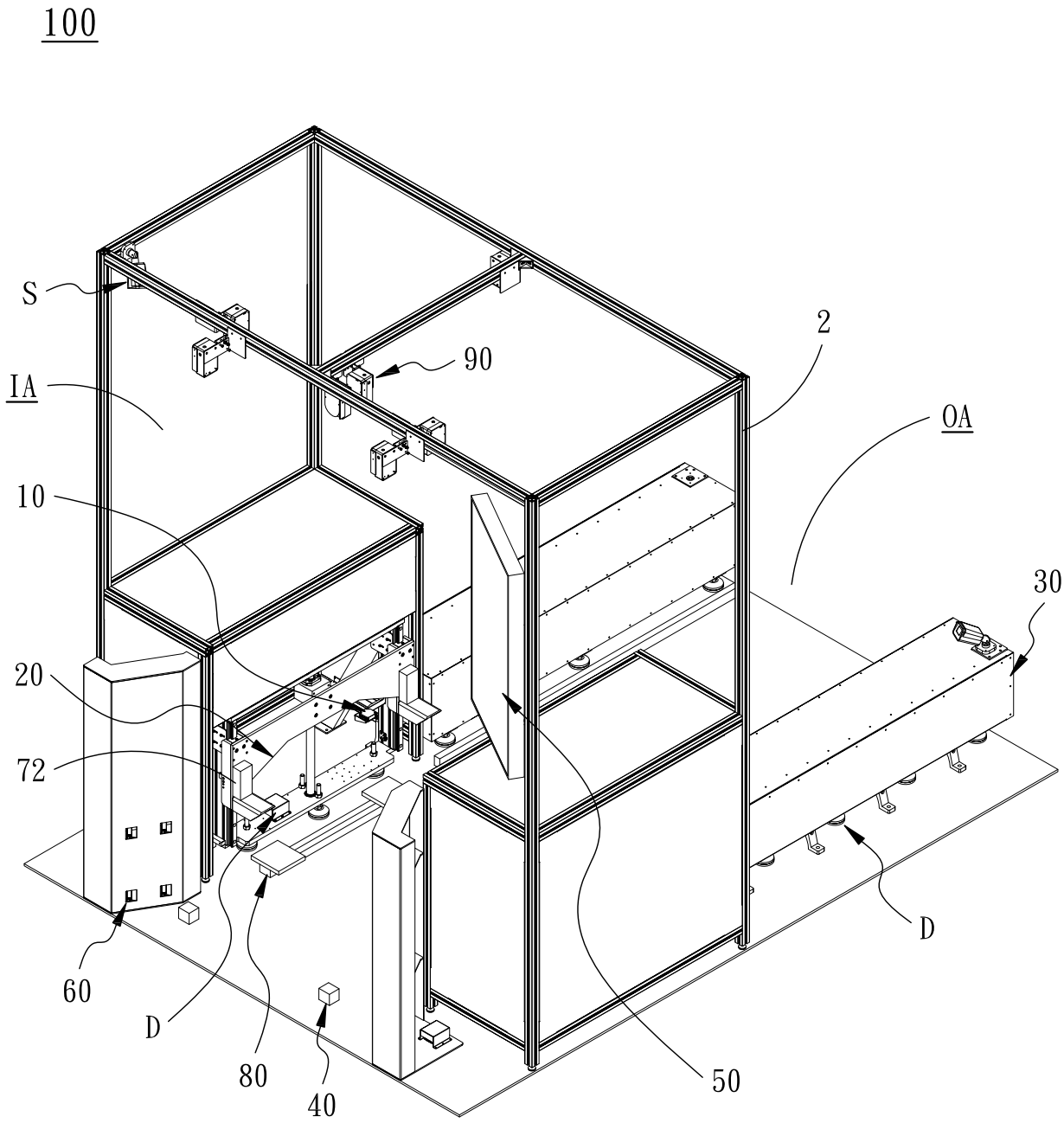

FIG. 1

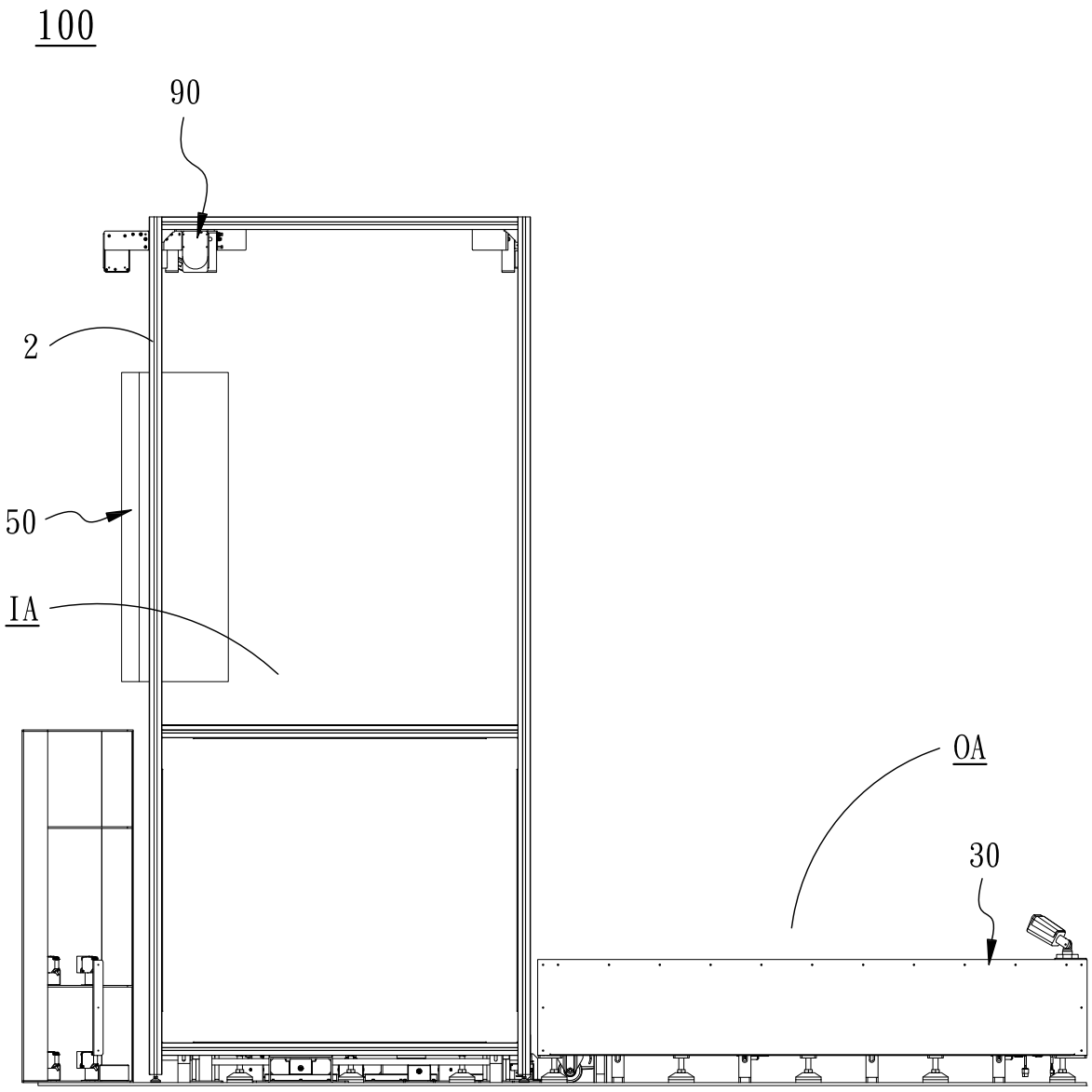

FIG. 2

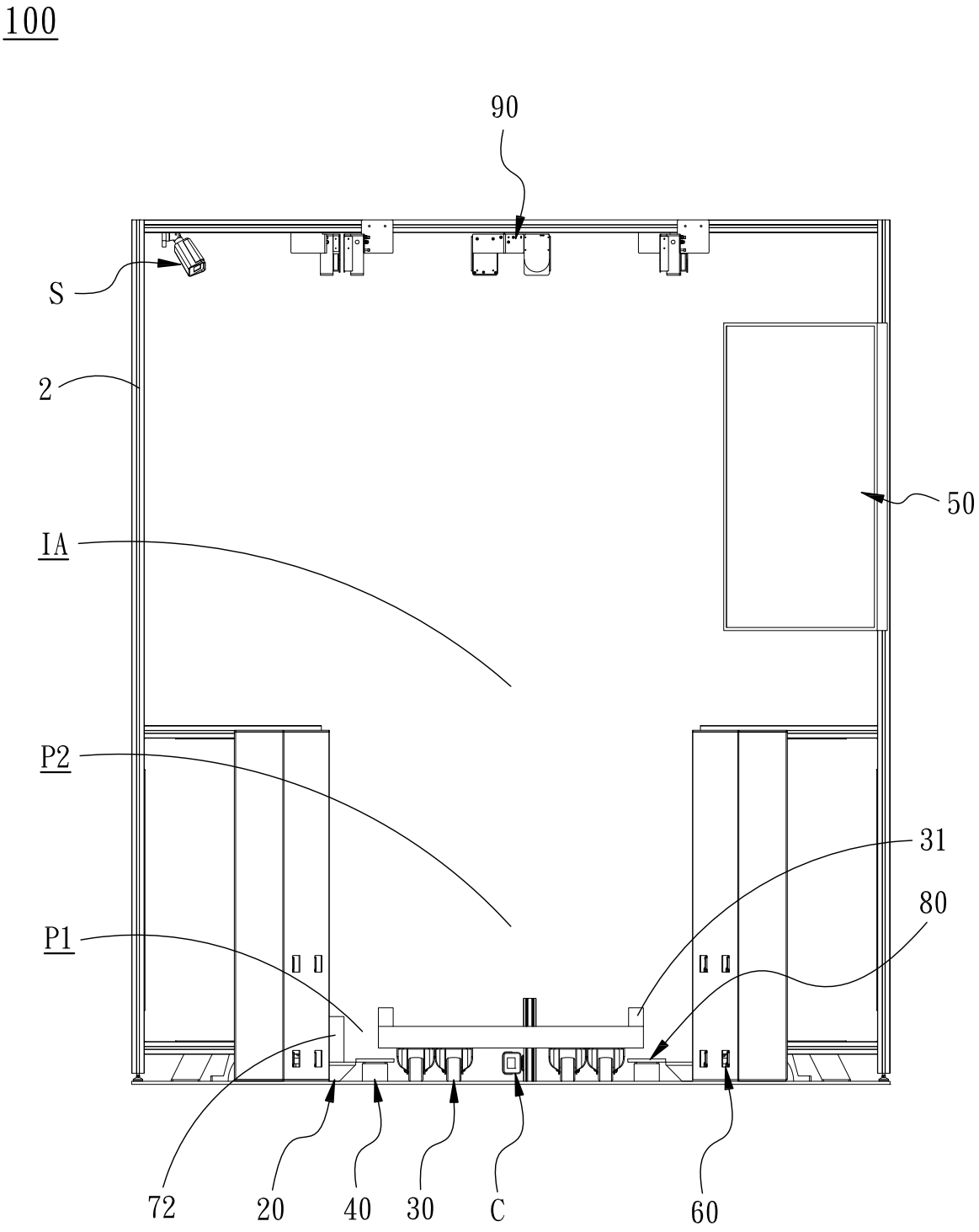

FIG. 3

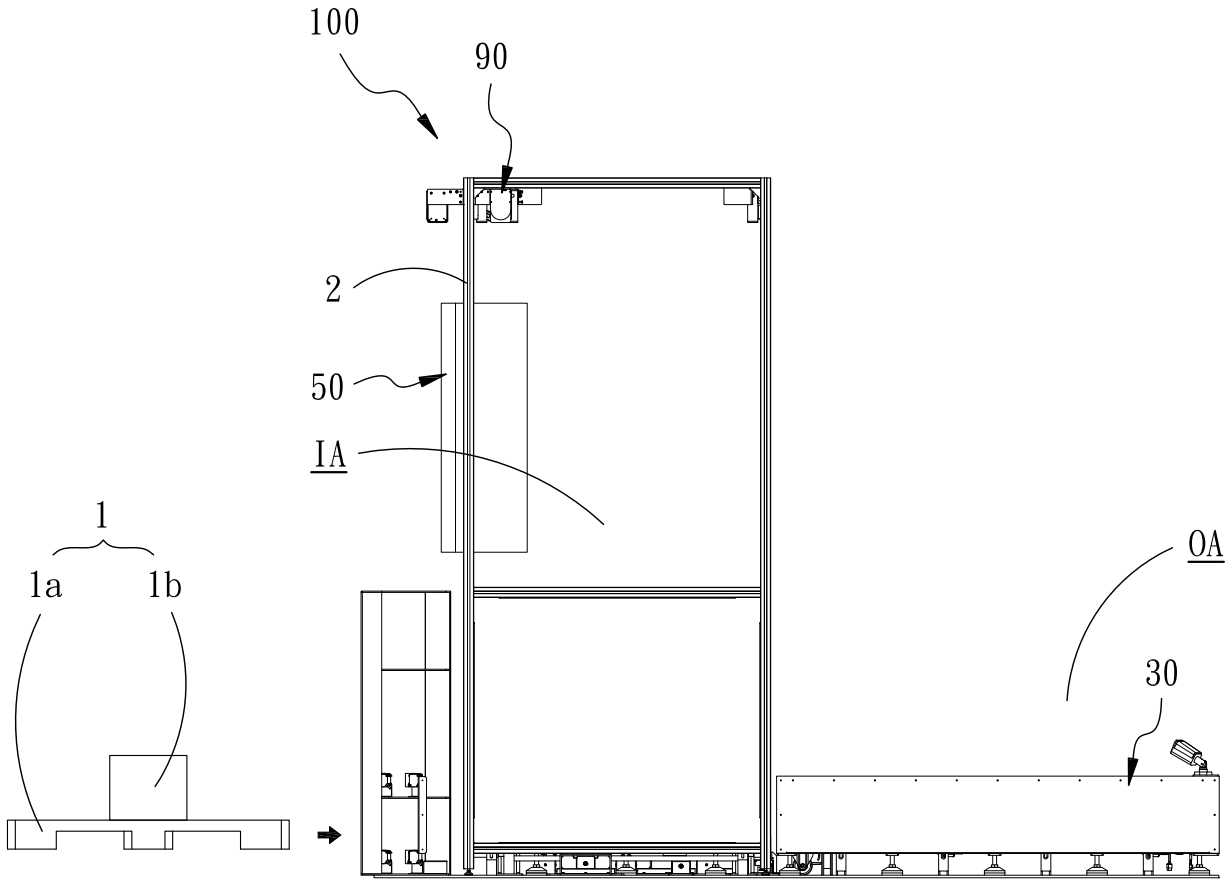

FIG. 4

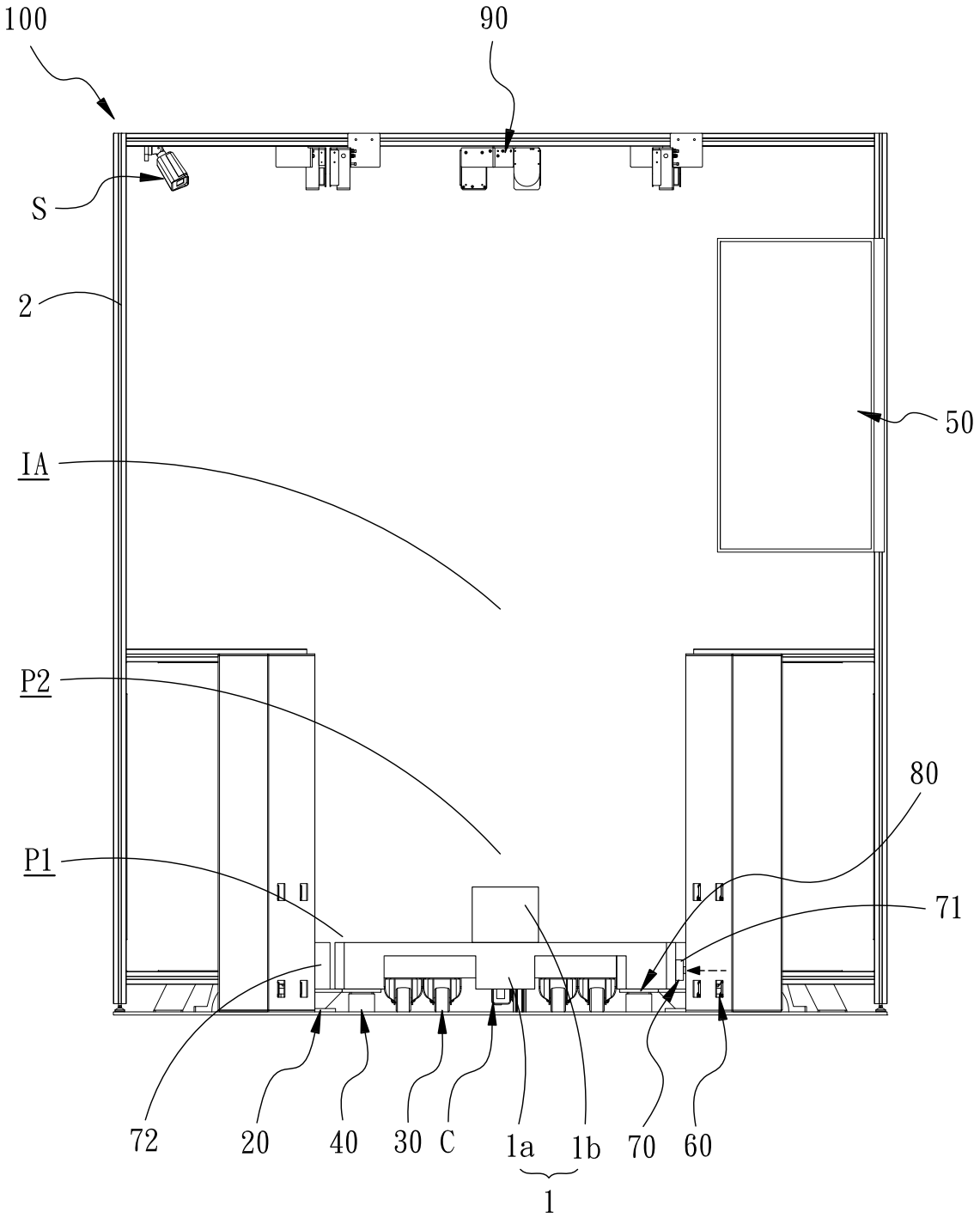

FIG. 5

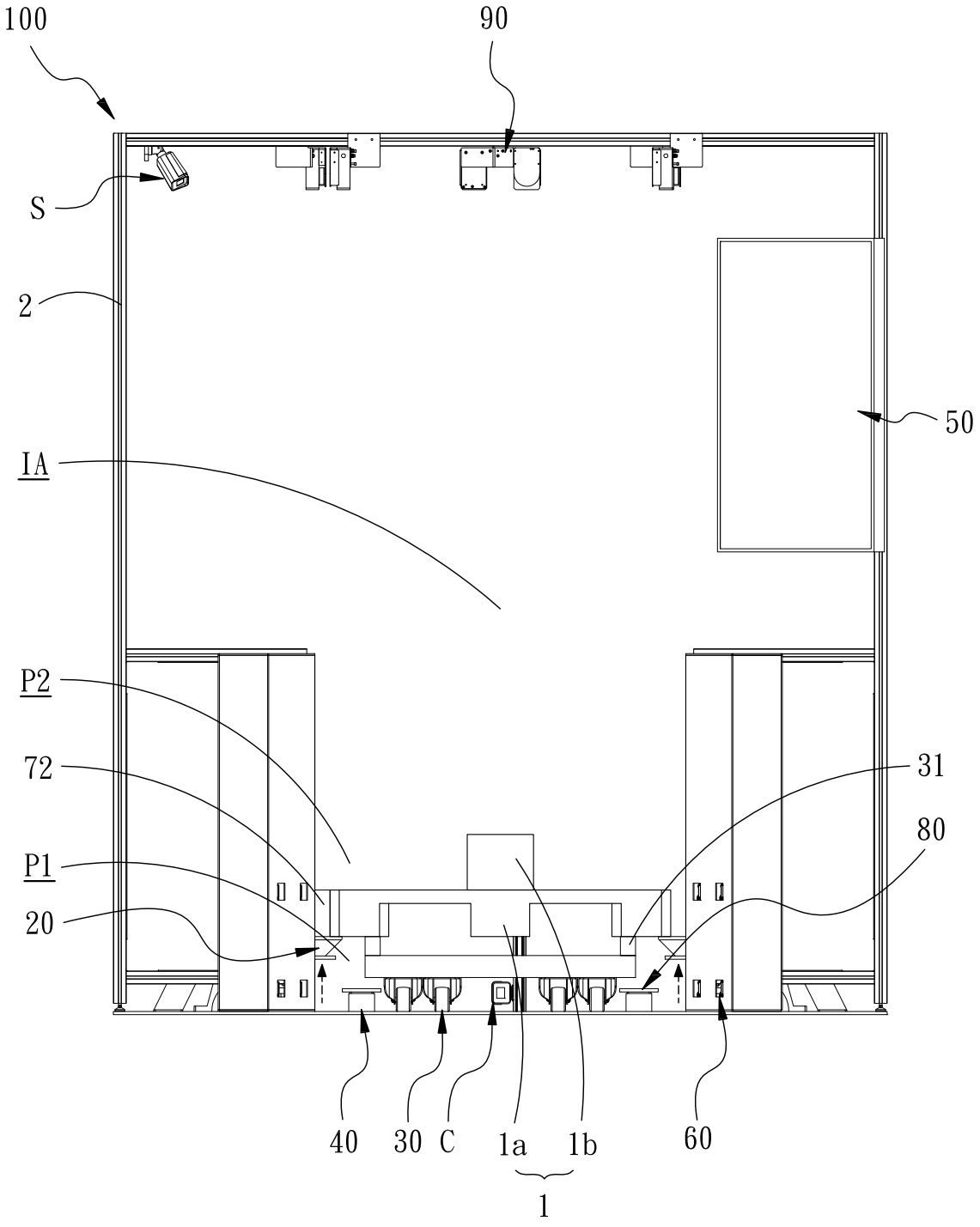

FIG. 6

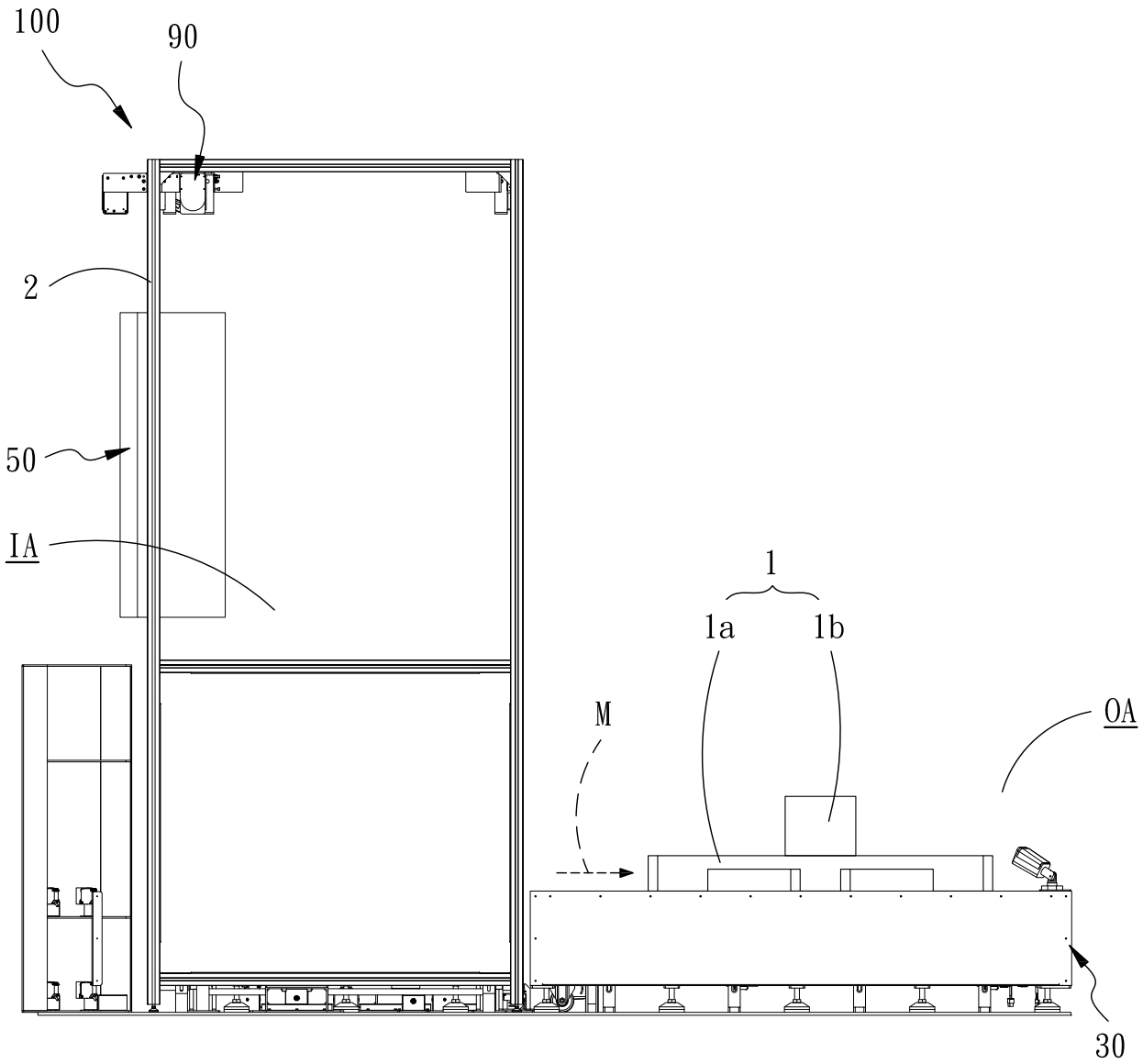

FIG. 7

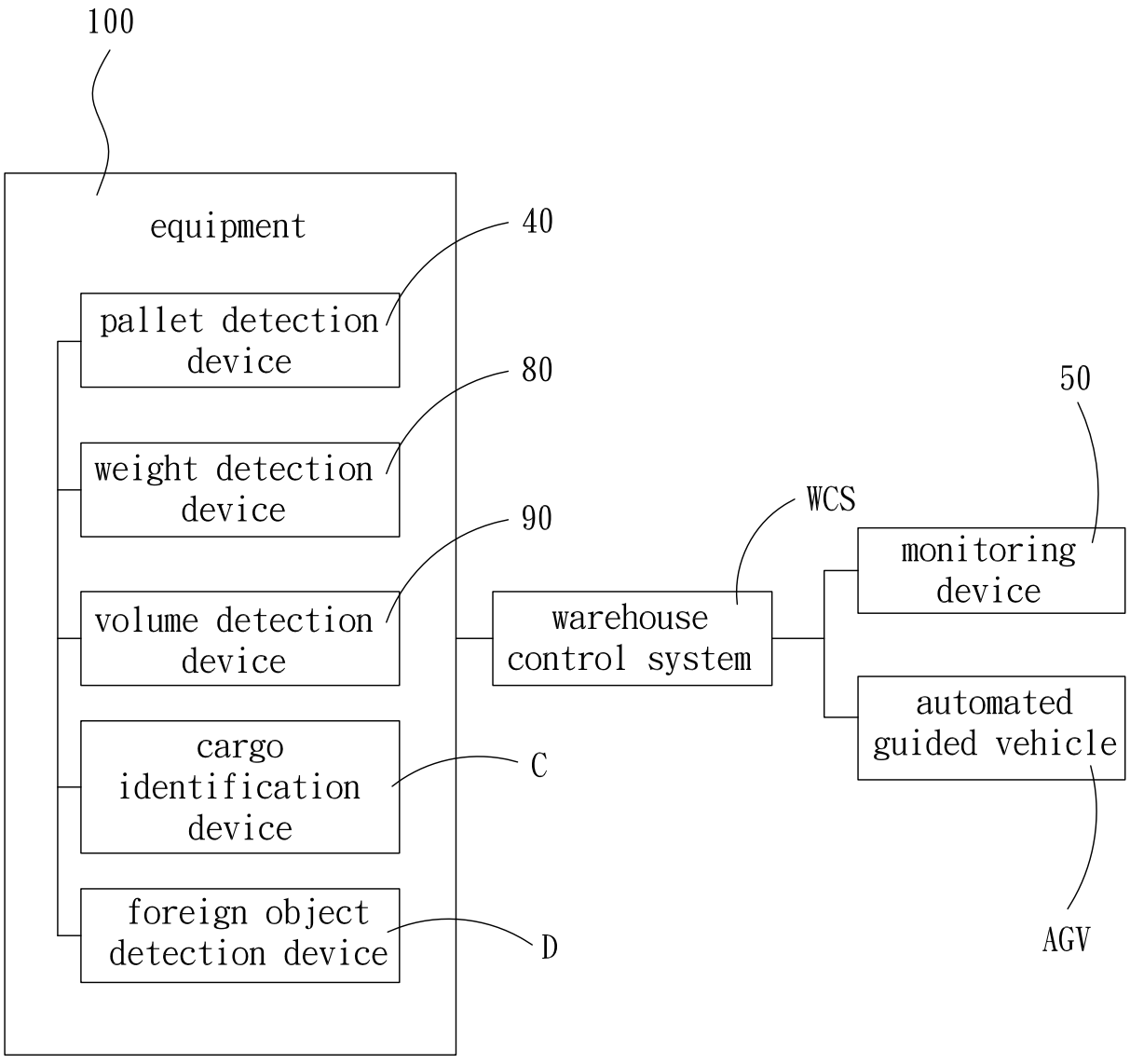
100
equipment
40
pallet detection device
80
weight detection device
90
volume detection device
cargo identification device
C
foreign object detection device
D
WCS
warehouse control system
50
monitoring device
automated guided vehicle
AGV

FIG. 8

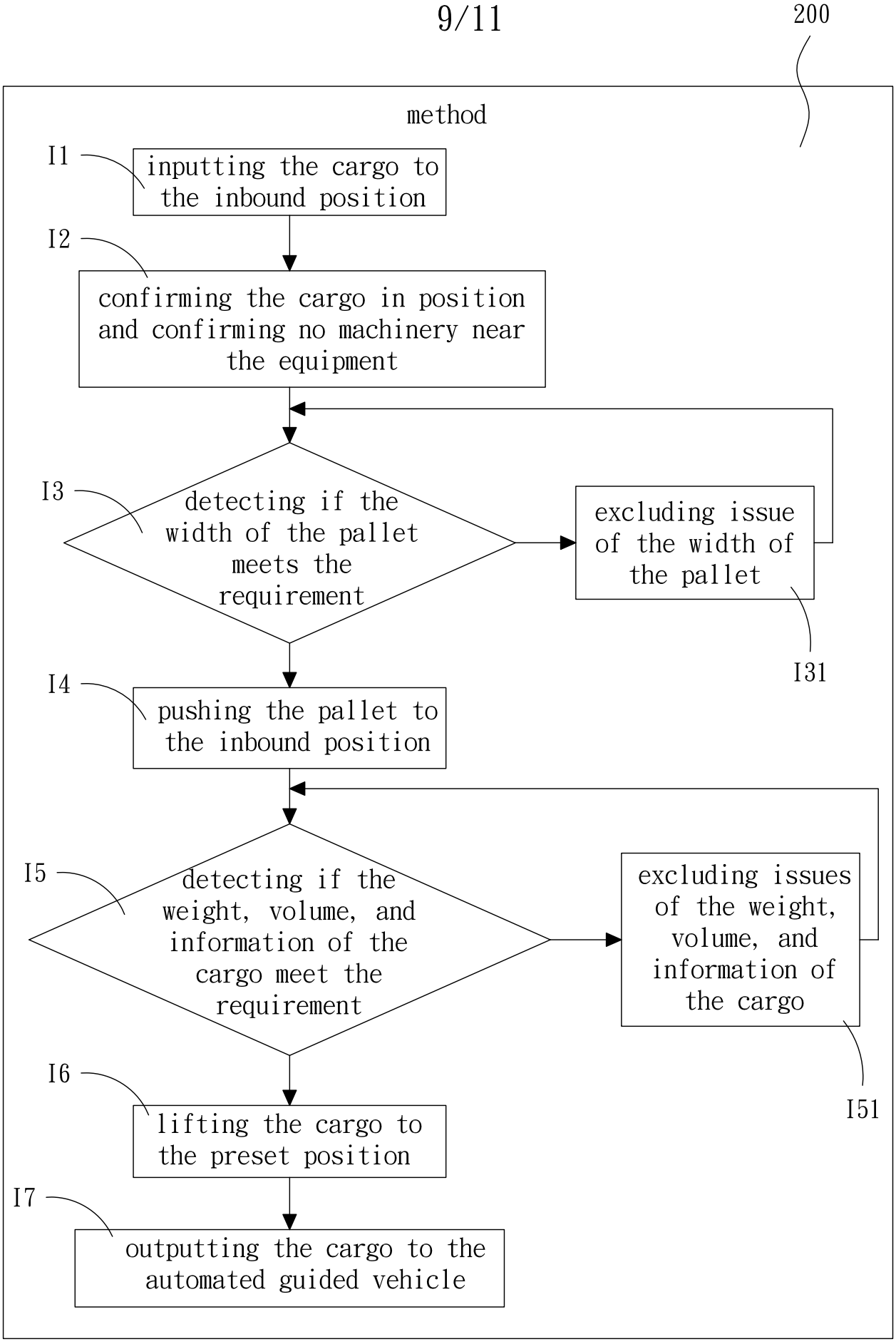
200
method
I1
inputting the cargo to the inbound position
I2
confirming the cargo in position and confirming no machinery near the equipment
I3
detecting if the width of the pallet meets the requirement
excluding issue of the width of the pallet
I31
I4
pushing the pallet to the inbound position
I5
detecting if the weight, volume, and information of the cargo meet the requirement
excluding issues of the weight, volume, and information of the cargo
I51
I6
lifting the cargo to the preset position
I7
outputting the cargo to the automated guided vehicle

FIG. 9

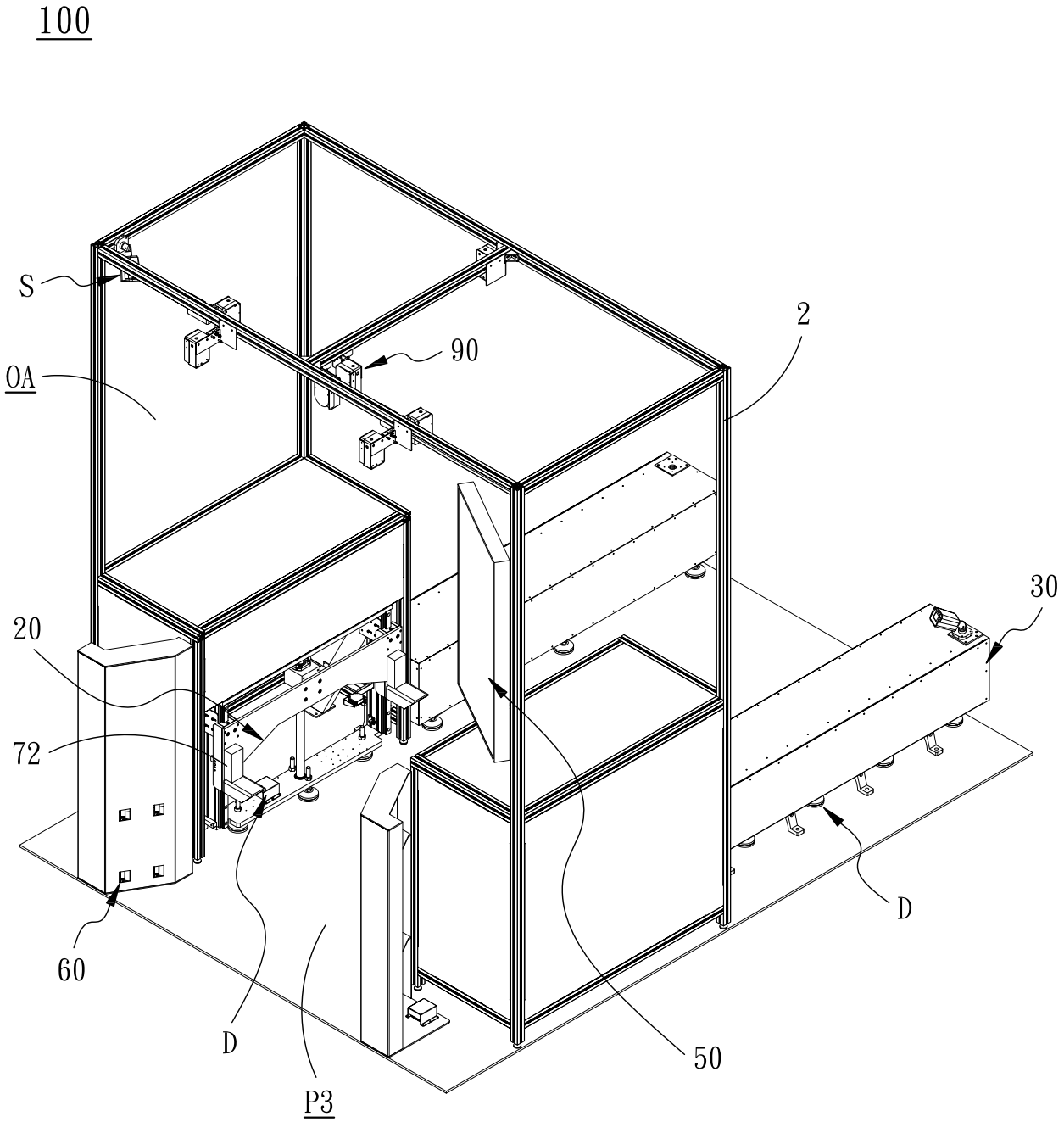

FIG. 10

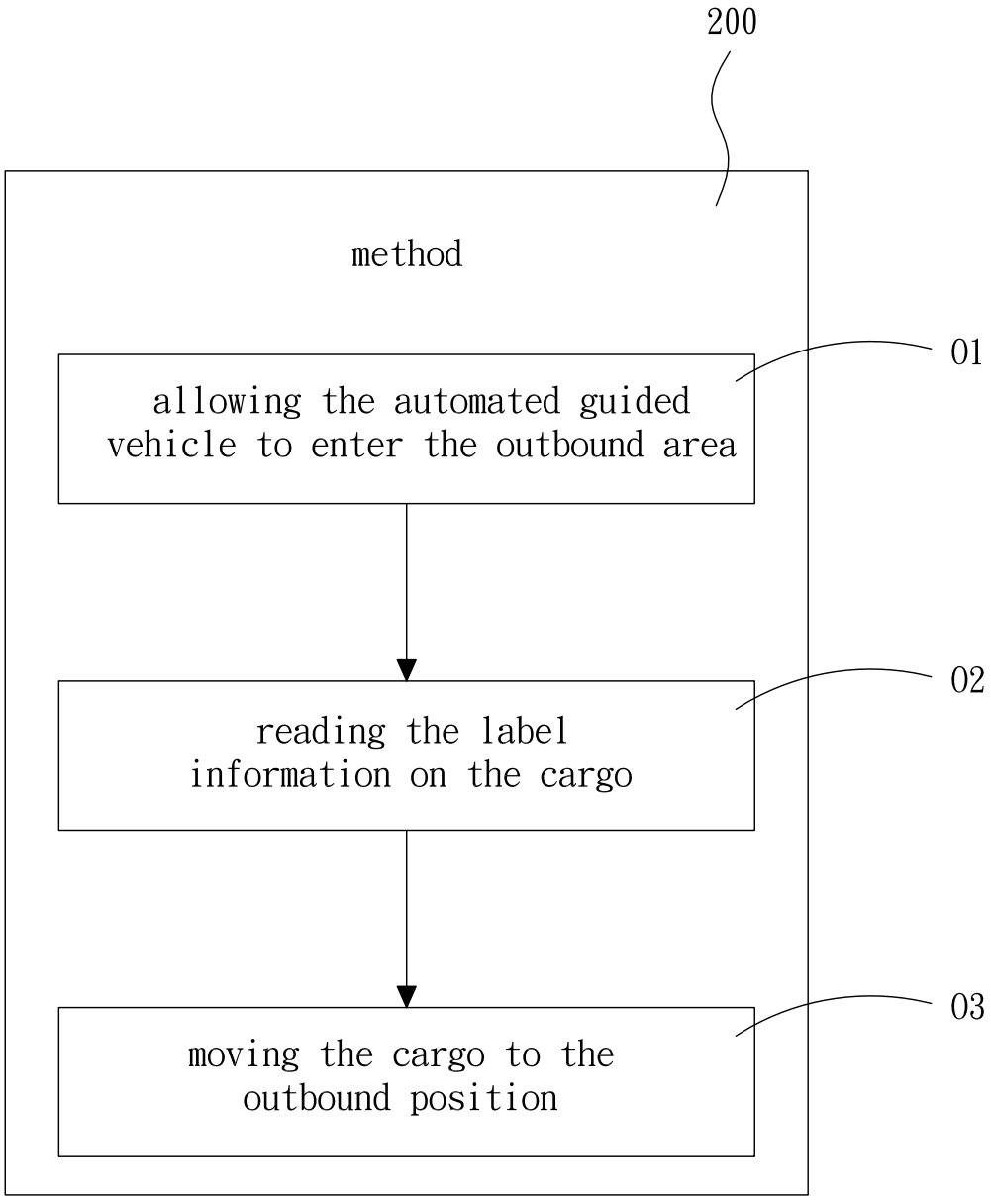
200
method
allowing the automated guided vehicle to enter the outbound area
01
reading the label information on the cargo
02
moving the cargo to the outbound position
03

FIG. 11