FIG 1

193193

G00001

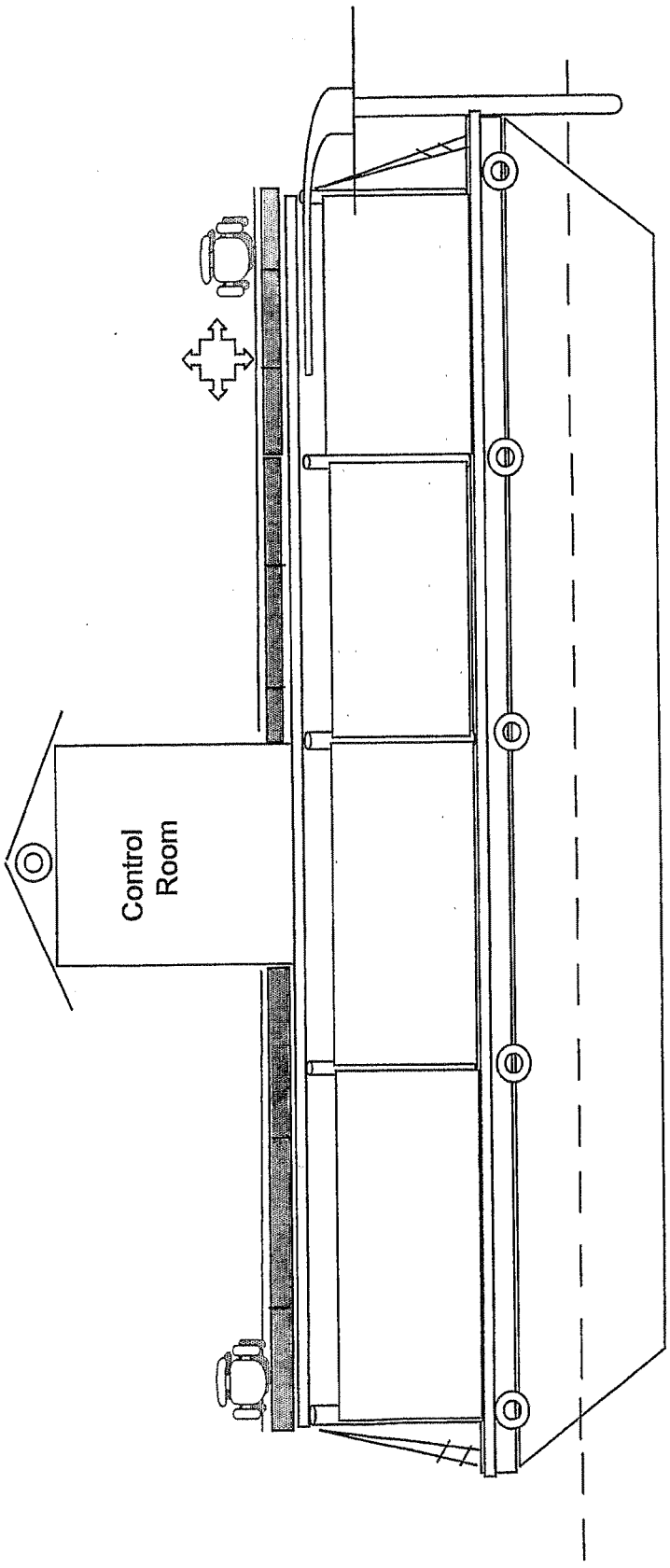

SIDE VIEW

FIG. 1

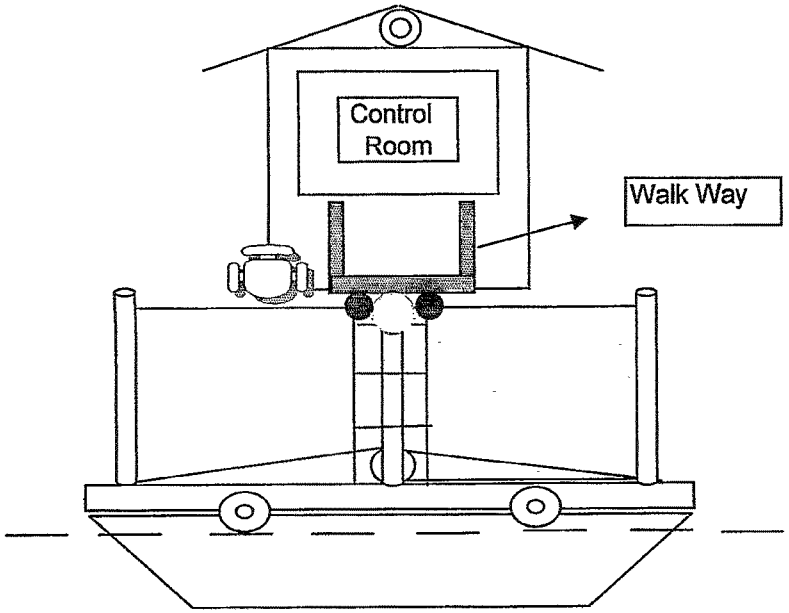

FRONT VIEW

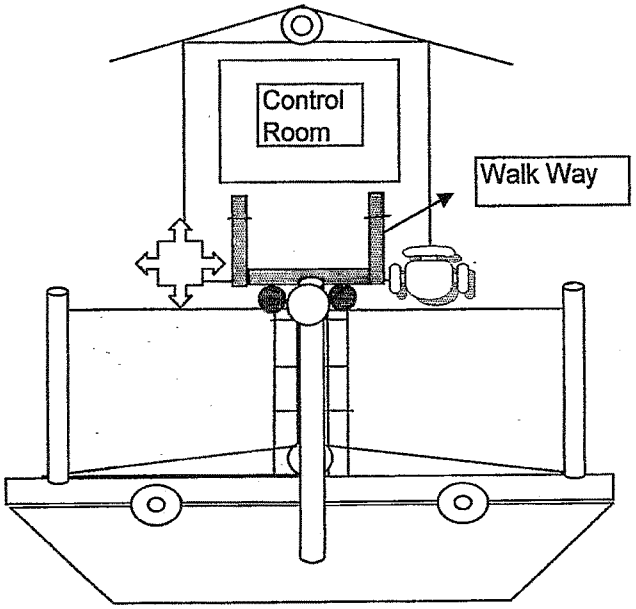

BACK VIEW

FIG. 2

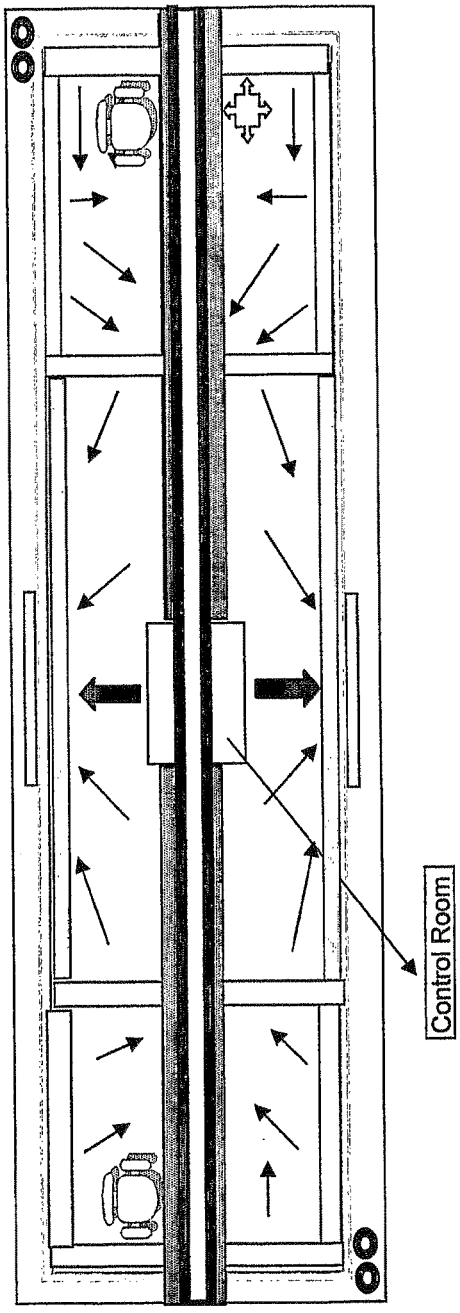

TOP VIEW 2

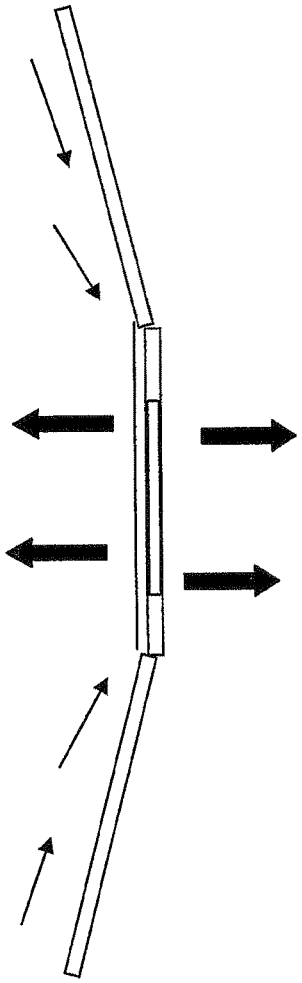

FIG. 3