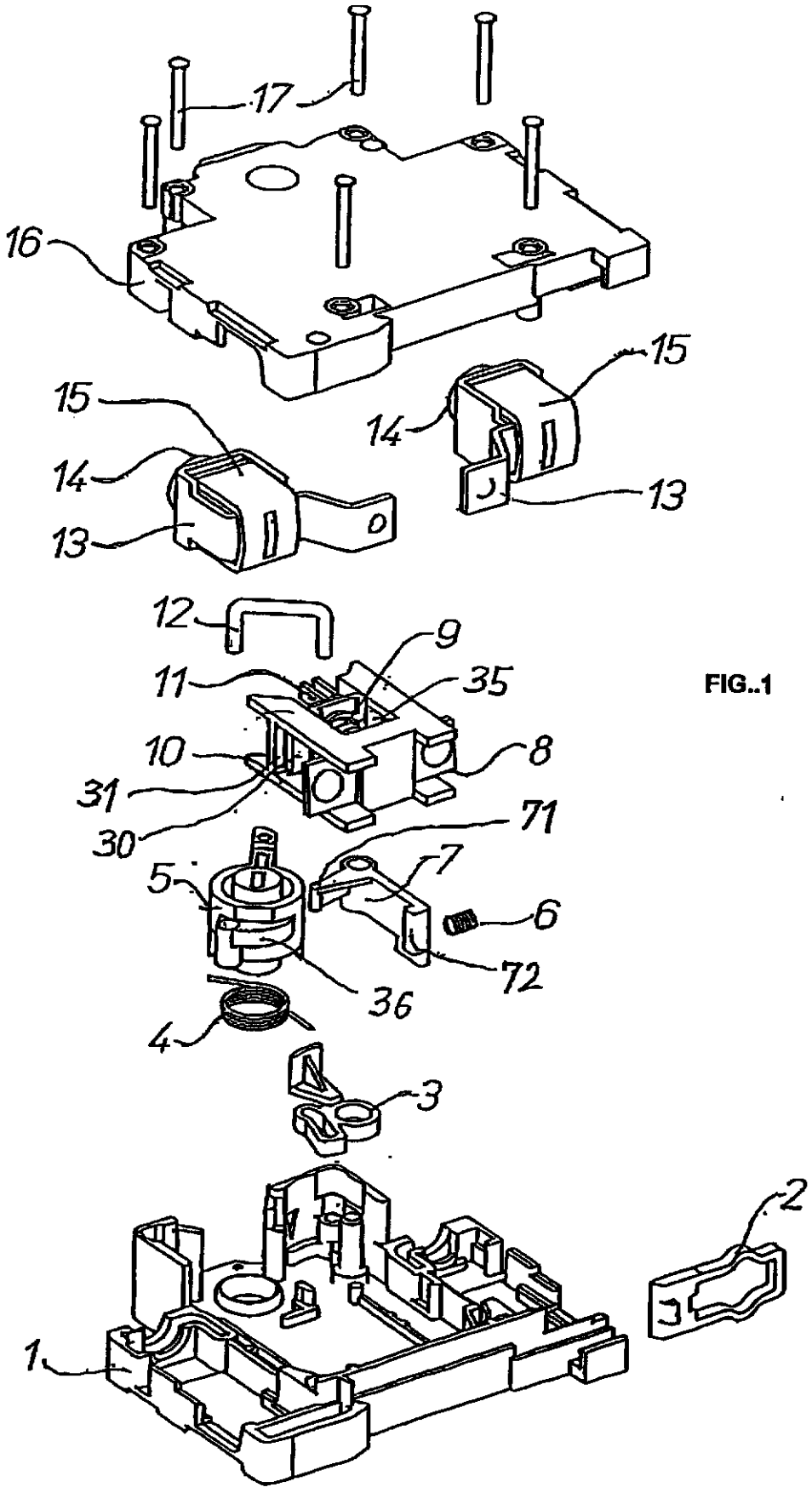

FIG..1

FIG..2

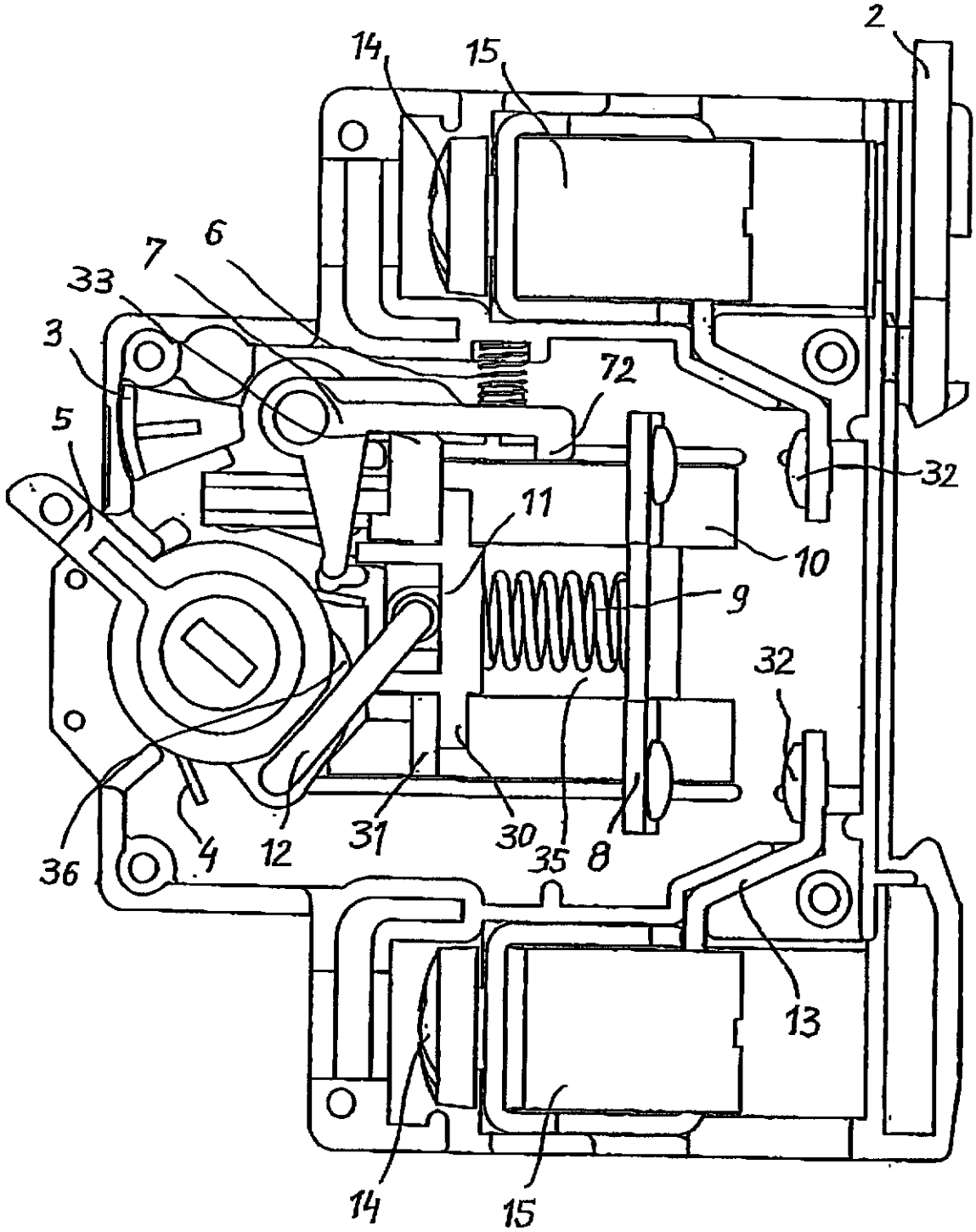

FIG..3

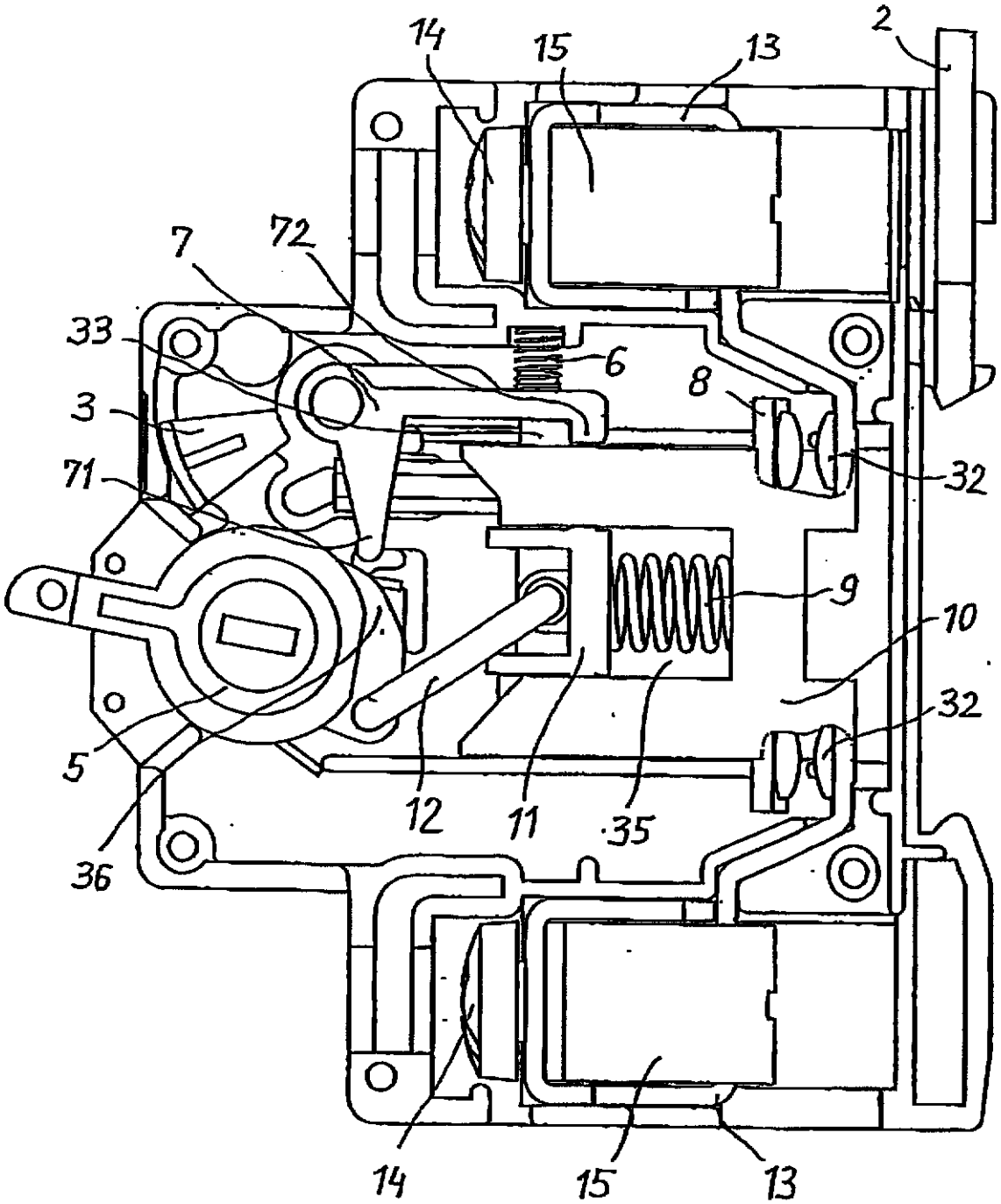

FIG..4

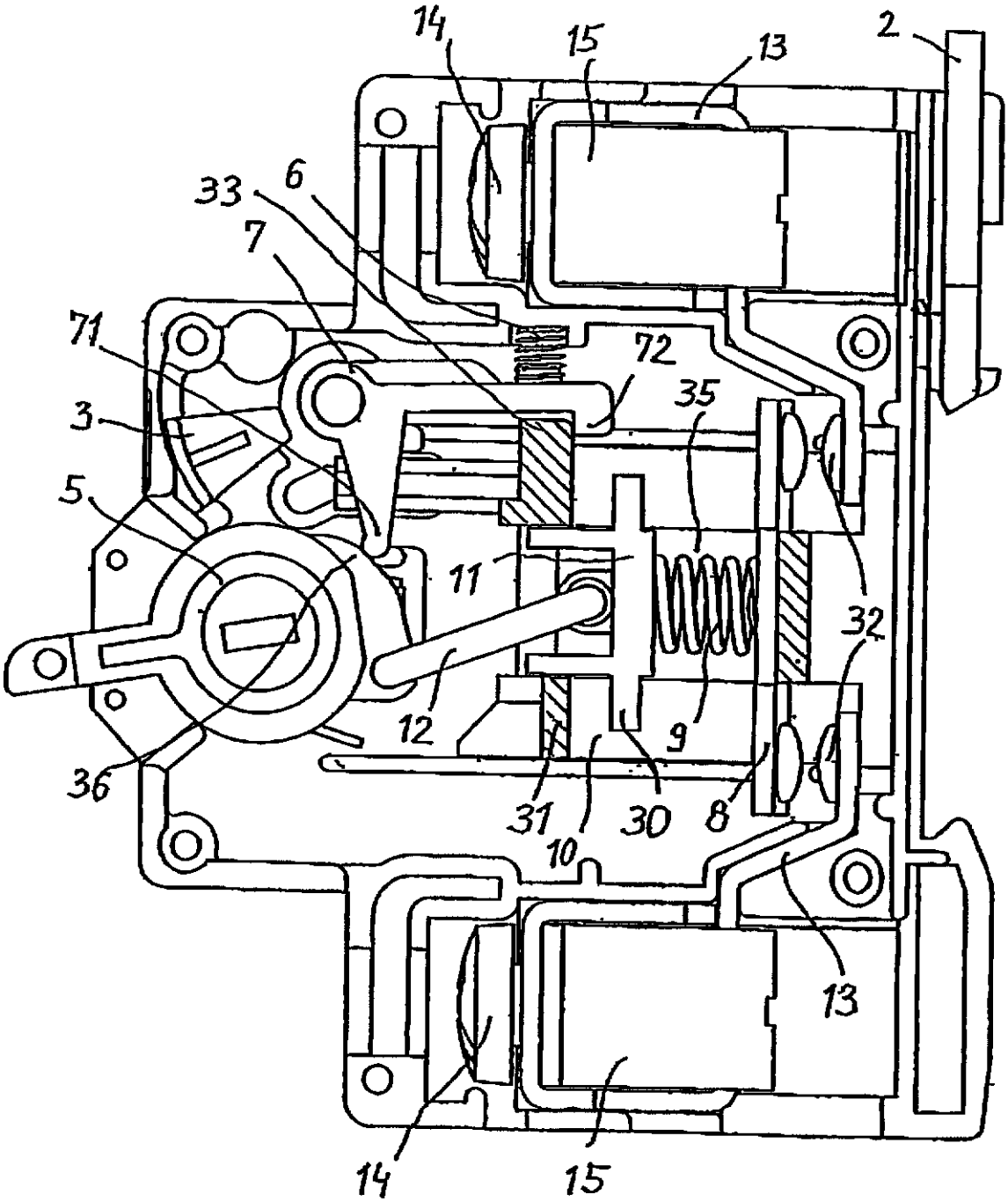

FIG..5

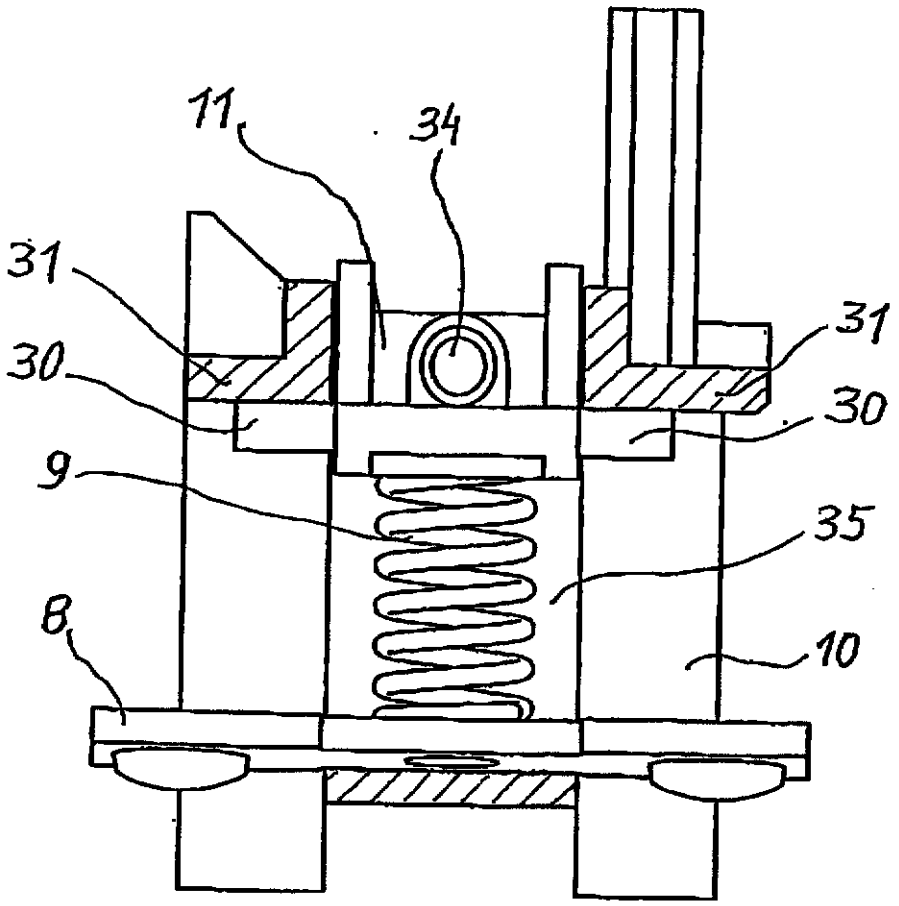

FIG..6

